SW1001
SW1002

HIOKI

Instruction Manual

SWITCH MAINFRAME

The latest edition of the instruction manual

Read carefully before use.
Keep for future reference.

Safety Information ▶ p.4
Measurement Flowchart ▶ p.12
Preparation for Measurements ▶ p.13
Maintenance and Service ▶ p.125
Error display and troubleshooting ▶ p.126

EN

June 2024 Revised edition 6
SW1001A961-06
600510226

Contents

Introduction 1
Confirming Package Contents 2
Safety Information 4
Usage Notes 4

1 Overview 7

1.1 Overview of Product 7
1.2 Features 7
1.3 Parts Names and Functions 8
1.4 Block Diagram 10
1.5 Glossary 11
1.6 Measurement Flowchart 12

2 Preparation for Measurements 13

2.1 Connecting Instruments and Controlling the Device 13
2.2 Installing the Module 15
2.3 Removing the Module 16
2.4 Connecting the Measurement Cable 18
2.5 Connecting the Connection Cable 19
TERMINAL 1 20
TERMINAL 2 20
TERMINAL 3 21
2.6 Setting the Communication Setting Mode 22
2.7 Connecting the Power Cord 23
2.8 Turning on/off the Power 23
2.9 When the Power is Turned on 24

3 Channel Switching 25

3.1 Inspection before Measurement 25
Inspecting the device and peripheral devices 25
Checking for relay contact welding 26
3.2 Overview of Channel Switching 27
3.3 Procedure for Switching the Channel 28
Selecting the connection method 28
Switching the shield 29
Selecting the channel 30
3.4 Channel Switching Operation 31
3.5 Measurement between Two Instruments 32
3.6 Precautions for Measurement 35
3.7 Channel Delay Function 37

4 Scan Function 39

4.1 Overview of the Scan Function 39
4.2 Setting the Scan Channel 40
4.3 Setting the Trigger Source for Scan Operation 40
4.4 Scan Operation 41
4.5 Resetting Scan Operation 42
4.6 Scan Measurement Example 43

5 Other Functions 45

5.1 Checking the Device Status 45

6 Initialization 47

6.1 Initialization Settings 47

7 External Control (EXT. I/O) 49

7.1 External Control Flow 49
7.2 Switching between Sinking Current (NPN) and Sourcing Current (PNP) 50
7.3 Connection 51
Device connector and compatible connectors 51
Signal Functions 52
Connection to the instrument 52
7.4 Timing Chart 53
Channel switching operation and scan operation reset 53
7.5 Internal Circuit Configuration 55
Electrical specifications 56
Connection examples 57

8 Communication Function 59

8.1 Interface Overview and Features 59
8.2 Setting the Communication Setting Mode 59
8.3 LAN Interface 60
Communication condition settings 61
Setting LAN communications 62
Connecting the LAN cable 63
8.4 USB Interface 64
Installing the USB driver 64
Connecting the USB cable 65

8.5 RS-232C Interface....66
Connecting the RS-232C cable....66
Setting RS-232C communications....68
Setting the controller (PC, PLC, etc.)....68
8.6 Communication Command Forwarding Function....69
8.7 Communication Method....71
Message format....71
Output queue and input buffer....76
Status Byte Register....77
Event Registers....79
Initialization items....86
Remote state....86
8.8 Message List....87
8.9 Message Reference....90
Standard commands....91
Device-specific commands....94
8.10 Sample Programs....107
Using Visual Basic® 5.0 or 6.0....107
Using Visual Basic® 2013....111

9 Specifications 119

9.1 SW1001, SW1002 General Specifications....119
9.2 SW1001, SW1002 Input Specifications/ Output Specifications/ Measurement Specifications....120
Basic specifications....120
9.3 SW1001, SW1002 Functional Specifications....121
9.4 SW1001, SW1002 Interface Specifications....123
LAN....123
USB....123
RS-232C....123
EXT. I/O....124

10 Maintenance and Service 125

10.1 Troubleshooting....125
Before sending the device for repair....125
Error display and troubleshooting....126
10.2 List of Device Error Numbers....127
10.3 Repair and Inspection....128

11 Multiplexer Module 129

11.1 SW9001 Multiplexer Module (2-wire/4-wire)....129
Features....129
Specifications....129
Switching wiring diagram....135
Connector wiring diagram....136
Acquiring the relay opening/closing frequency....138
11.2 SW9002 Multiplexer Module (4-terminal pair)....139
Features....139
Specifications....139
Switching wiring diagram....142
Connector wiring diagram....143
Acquiring the relay opening/closing frequency....144
11.3 Accuracy Calculation Example....145

12 Appendix 147

12.1 Measurement cable....147
12.2 Measuring Object Short Circuit due to Relay Contact Welding....150
12.3 Rack Mount....152
Rack mount bracket....152
L-shape bracket (For installing the module in automated equipment)....157
12.4 Outline Drawings....158
SW1001....158
SW1002....159

13 License Information 161

Index 163

Warranty Certificate

Introduction

Thank you for purchasing the Hioki SW1001, SW1002 Switch Mainframe. To obtain maximum performance from the device over the long term, be sure to read this manual carefully and keep it handy for future reference.

With the optional multiplexer module (hereafter referred to as “module”) installed on this device, the input of multiple channels can be switched to one or two measuring instruments (hereafter referred to as simply “instrument”).
Modules can be installed in 3 slots for the SW1001 and 12 slots for the SW1002. Other functions are common for all the models.

Be sure to also read the separate document “Operating Precautions” before use.

Latest edition of intsruction manual

	The latest edition of the instruction manual The contents of this manual are subject to change, for example as a result of product improvements or changes to specifications. The latest edition can be downloaded from Hioki’s website. https://www.hioki.com/global/support/download
	Product registration Register your product in order to receive important product information. https://www.hioki.com/global/support/myhioki/registration/

Target audience

This manual has been written for use by individuals who use the product in question or who teach others to do so. It is assumed that the reader possesses basic electrical knowledge (equivalent to that of someone who graduated from the electrical program at a technical high school).

Trademarks

Microsoft, Visual Basic, Visual Studio and Windows are trademarks of the Microsoft group of companies.

Notations

*	Additional information is presented below.
[ ]	Menus, dialog boxes, buttons in a dialog box, and other names on the screen are indicated in brackets.
POWER (Bold)	Indicates the names and keys on the screen and the device in boldface.
(p.)	Indicates the location of reference information.

Accuracy

We define measurement tolerances in terms of f.s. (full scale), rdg. (reading), and dgt. (digit) with the following meanings.

f.s.	(maximum display value or range) The maximum display value.
rdg.	(reading or displayed value) The value currently being measured and indicated on the instrument.
dgt.	(resolution) The smallest displayable unit on a digital measuring device, i.e., the input value that causes the digital display to show a “1” as the least-significant digit.

Confirming Package Contents

Main unit and accessories

Confirm that these contents are provided.

☐ **Model SW1001 or SW1002 Switch Mainframe**

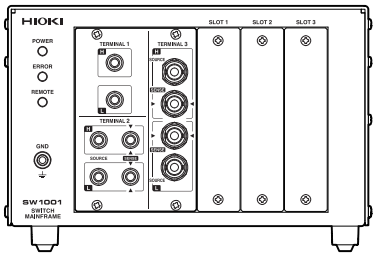

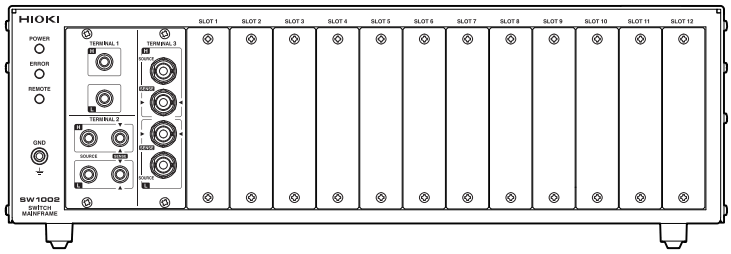

☐ **Instruction Manual (this document)**

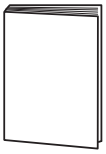

☐ **Power cord**

☐ **Operating Precautions (0990A905)**

☐ **CD (USB driver)***

* The latest version can be downloaded from our website.

Options

The following options are available for the device. Contact your authorized Hioki distributor or reseller when ordering. The options are subject to change. Visit our website for updated information.

Module

☐ **Model SW9001 Multiplexer Module (2-wire/4-wire)**

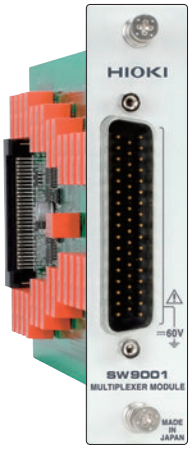

☐ **Model SW9002 Multiplexer Module (4-terminal pair)**

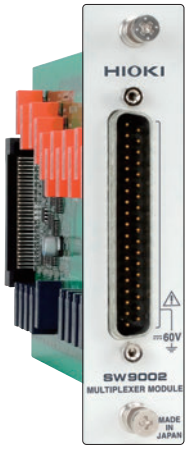

Connection cable

⚠ See: “Before measurement” (p. 5)

☐ **Model L2004 Connection Cable**

Length:	Approx. 910 mm
Maximum rated voltage:	30 V peak
Maximum rated voltage to earth:	30 V DC or less, no measurement category
Maximum rated current:	2.5 A peak

☐ **Model L2108 Connection Cable**

Length:	Approx. 840 mm
Maximum rated voltage:	60 V DC, 30 V AC rms, 42.4 V peak
Maximum rated voltage to earth:	60 V DC or less, no measurement category
Maximum rated current:	2 A peak

☐ **Model L4930 Connection Cable Set**

Length:	Approx. 1.2 m
Maximum rated voltage*:	CAT III: 1000 V CAT IV: 600 V

* Do not input voltage exceeding the rating of this device and the instrument.

Communications cable

☐ **Model 9642**
LAN Cable

☐ **Model L1002**
USB Cable (A-B)

☐ **Model 9637**
RS-232C Cable (9pin-9pin/1.8 m)

Safety Information

Be sure to also read the separate document “Operating Precautions” before use.

Usage Notes

Check before use

Follow these precautions to ensure safe operation and to obtain the full benefits of the various functions.

⚠ WARNING

If a connection cable or the device is damaged, there is a risk of an electric shock. Perform the following inspection before using the device.

- **Before using the device, check that the coating of the connection cables are neither ripped nor torn and that no metal parts are exposed. Using the device under such conditions could result in an electric shock. Replace any damaged cable with a new one.**
- **Before using the device the first time, verify that it operates normally to ensure that no damage occurred during storage or shipping. If you find any damage, contact your authorized Hioki distributor or reseller.**

This device is designed to measure voltages of 60 V or lower. Do not input voltages over 60 V or measure locations exceeding 60 V from the ground potential.

If the relay of the device fails, the battery of the measuring object may be shorted (p. 150).

Installing the device and module

⚠ CAUTION

Do not position the device on an unstable table or inclined surface. Dropping or knocking down the device can cause injury or damage to the device.

Installing

To prevent overheating, be sure to leave the specified clearances around the device.

- The device should be operated only with the bottom side downwards.

Side: 50 mm or more

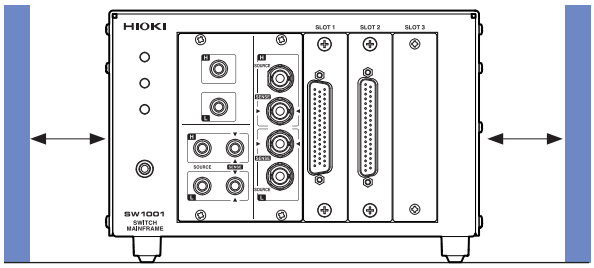

Rear: 10 mm or more

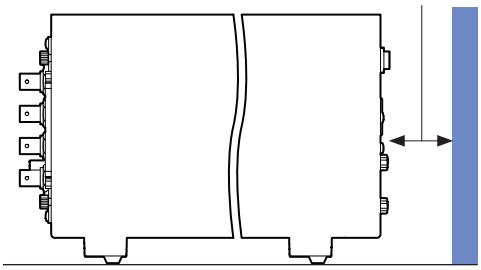

Handling the device

This device may cause interference if used in residential areas. Such use must be avoided unless the user takes special measures to reduce electromagnetic emissions to prevent interference to the reception of radio and television broadcasts.

Before installing the module

⚠ WARNING

- **To prevent an electric shock, before removing or replacing a module, confirm that the device is turned off and that all the measurement cables, connection cables, and the power cord are disconnected.**
- **Installing a module while the device is turned on may prevent detection of the contact state of relays on the module or result in short-circuiting of the measuring object. Damage of the device or module may cause the measuring object to be shorted or the instrument to fail.**
- **Be careful about short circuits when connecting a measuring object with electromotive force (battery, power supply, etc.).**
- **The maximum voltage of the device contact is 30 V (rms value) and 42.4 V (peak value) or 60 V (direct current). Do not directly connect a withstand voltage tester or an insulation resistance tester.**

⚠ CAUTION

When installing or removing the module, be sure to observe the following precautions:

- Touch the **GND** terminal of the device with your hand to release static and then use antistatic gloves to perform procedures.
- Hold the sheet metal area of the module. Directly touching the board with your hand may damage the circuit board due to static. If the measurement target has high resistance, the error component due to factors such as oil from your fingers may increase in magnitude.

Before measurement

⚠ DANGER

- **Do not short-circuit between electrodes or terminals using a probe when measuring the battery or capacitor. Doing so may cause an electric arc, resulting in serious injury.**
- **Do not use the device or the connection cables that exceed its ratings or specifications. Doing so may damage the device or cause it to become hot, resulting in a bodily injury.**
- **Do not use the instrument to be used in conjunction with the device outside of its ratings or specifications. Doing so may damage the instrument or cause it to become hot, resulting in a physical injury.**

⚠ WARNING

The maximum rated voltage between the module and ground is 60 V DC. To avoid an injury and damage to the device, ensure that voltage between channels never exceeds this limit. Prevent the voltage potential difference of the entire system from exceeding 60 V DC.

The measurement connector frame of the module is connected to the casing (metal) of the device as well as the protective ground terminal of the power inlet (conductive).

Before starting the external control

⚠ WARNING

To prevent an electric shock or damage to the device, always observe the following precautions when connecting the cables to the EXT. I/O terminals.

- **Always turn off the device and any devices to be connected before making connections.**
- **Be careful to avoid exceeding the signal ratings of the EXT. I/O terminals.**
- **During operation, a wire becoming dislocated and contacting another conductive object can be a serious hazard. Use screws to secure the external connectors.**
- **Ensure that devices and systems to be connected to the EXT. I/O terminals are properly isolated from one another.**

Before connecting the communications cables

⚠ CAUTION

- Use a common ground for both the device and the PC. Using different ground circuits will result in a potential difference between the device's ground and the computer's ground. If the communications cable is connected while such a potential difference exists, it may result in device malfunction or failure.
- Before connecting or disconnecting any communications cables, always turn off the device and the PC. Failure to do so could result in equipment malfunction or damage.
- After connecting the communications cables, tighten the screws on the connector securely. Failure to secure the connector could result in device malfunction or damage.
- To avoid device failure, do not disconnect the communications cables while communications are in progress.

Precautions during shipment

Store the packaging in which the device was delivered, as you will need it when transporting the device.

Disc precautions

- Exercise care to keep the recorded side of discs free of dirt and scratches. When writing text on a disc's label, use a pen or marker with a soft tip.
- Keep discs inside a protective case and do not expose to direct sunlight, high temperature, or high humidity.
- Hioki is not liable for any issues your computer system experiences in the course of using this disc.

1 Overview

1.1 Overview of Product

This device is a module type switching system that is ideal for multi-channel measurement of batteries. You can choose a main frame from two choices according to the required number of channels. You can also choose a module from two module types according to the instrument to be used with the device (2-wire/4-wire module and 4-terminal pair module).

1.2 Features

Reduction of errors when measuring internal resistance

When AC low resistance measurement is performed using the BT4560 Battery Impedance Meter or the BT3562A Battery HiTester, the influence of electromagnetic induction (eddy current) on the measured value can be minimized.

Ability to switch measurement between two instruments

For example, you can connect a BT3562A and DM7276 to the device and use it to switch between internal resistance measurement and high-precision OCV measurement.

Protection against short circuit with fuses

To protect batteries to be measured if a short circuit occurs in a channel, a protective fuse is built into each channel.

1.3 Parts Names and Functions

Front

The illustration shown here is for the SW1001.

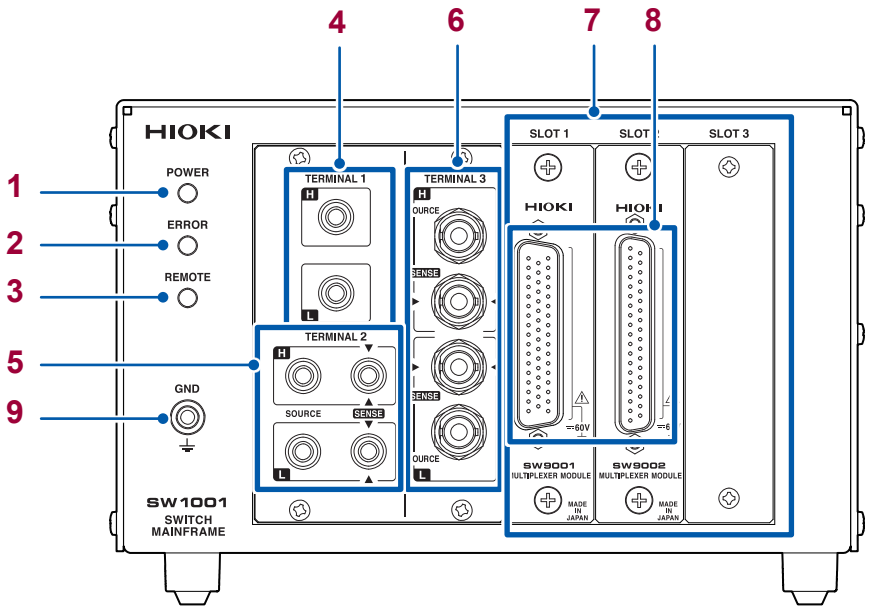

No.	Name	Description	Reference
1	**POWER lamp**	Lights up when the main frame power is on.	p. 23
2	**ERROR lamp**	Lights up for self-test at the time of startup and when an error, such as a communications error, occurs.	p. 23 p. 126
3	**REMOTE lamp**	Lights up when communications data is received.	p. 86
4	**TERMINAL 1**	Used to connect a 2-wire instrument.	p. 20
5	**TERMINAL 2**	Used to connect a 4-wire instrument.	p. 20
6	**TERMINAL 3**	Used to connect a 4-terminal pair (BNC terminal) instrument.	p. 21
7	**SLOT 1 to SLOT 3**	Used to attach the module.	p. 15
8	**Measurement cable connector**	Used to connect the measurement cable to each module. For more details, see the chapter for the multiplexer module.	p. 5 p. 18 p. 136 p. 143
9	**GND terminal**	Ground for the device. Connected to the ground.	p. 36

Rear

The illustration shown here is for the SW1001.

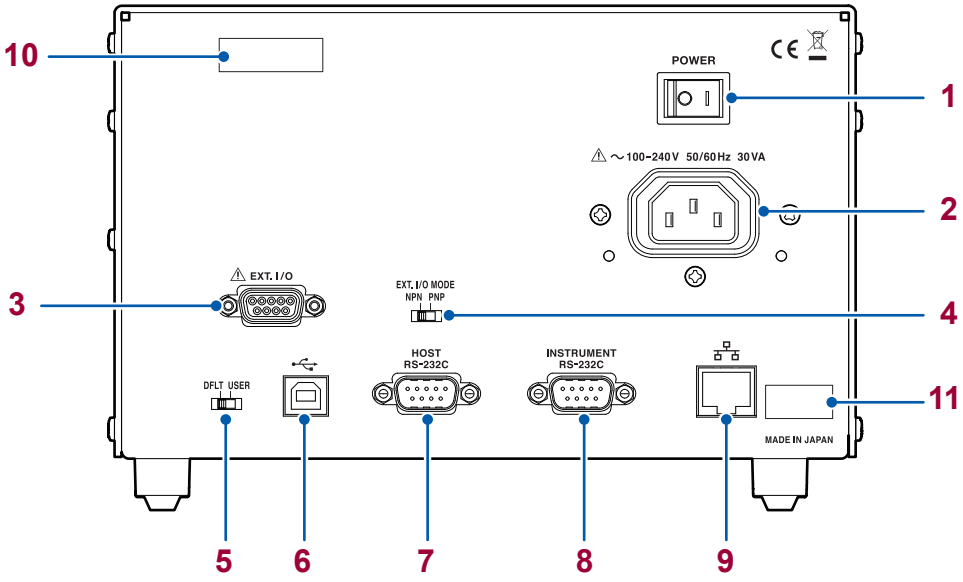

No.	Name	Description	Reference
1	**Power switch**	Turns on/off the power.	p. 23
2	**Power inlet**	Used to connect the provided power cord.	p. 23
3	**EXT. I/O terminal**	Used to connect the device to be externally controlled.	p. 51
4	**EXT. I/O MODE change-over switch**	Left: Sinking current (NPN), Right: Sourcing current (PNP)	p. 50
5	**Communication setting mode switch**	Perform communication using fixed settings when the communication settings are unknown.	p. 22
6	**USB connector**	Used to connect the PC.	p. 64
7	**HOST RS-232C connector**	Used to connect the PC.	p. 66
8	**INSTRUMENT RS-232C connector**	Used to connect the RS-232C connector of an instrument to use the communication command forwarding function.	p. 70
9	**LAN connector**	Used to connect the PC.	p. 60
10	**Serial number**	The first four digits of the 9-digit number indicate the year (its last two digits only) and the month of manufacture. Do not remove this sticker as the number is important.	–
11	**MAC address**	MAC address of the LAN.	p. 105

1.4 Block Diagram

The configuration of this device is shown in the following block diagram.

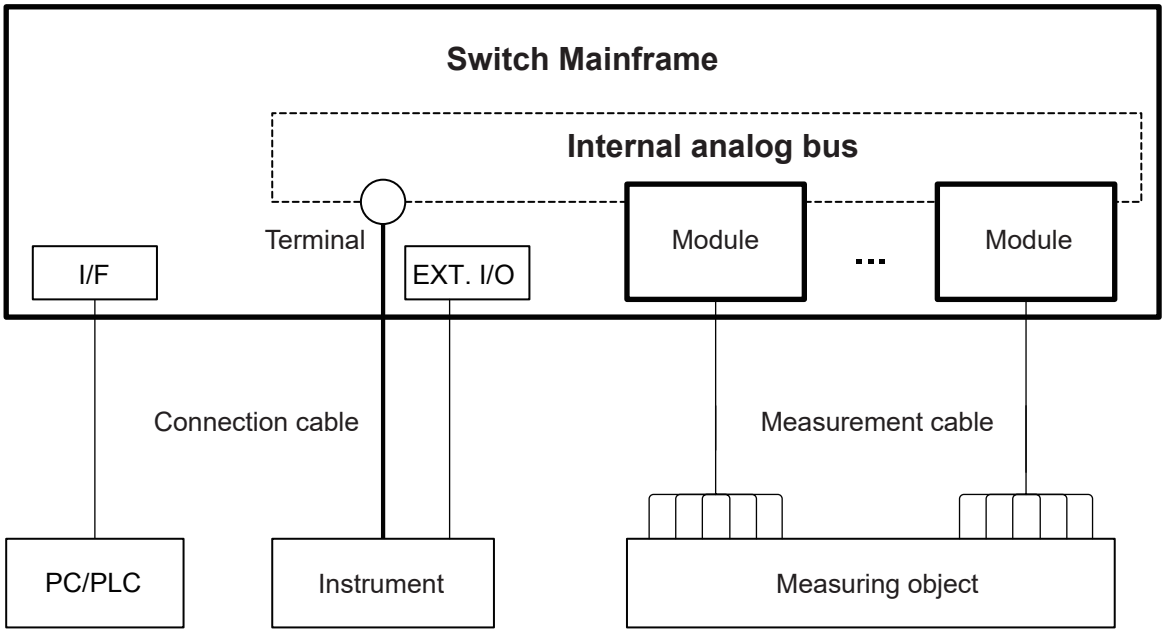

1.5 Glossary

Terms	Description	Reference
Measurement cable	Connects the measuring object and the module. It is prepared by the customer.	p. 147
Connection cable	Connects the switch mainframe and instrument. Prepare the optional cable.	p. 19
Terminal	Connects the instrument. The terminal to be used varies depending on the connection method (2-wire/4-wire/4-terminal pair)	p. 28
Module	For the switching circuit. The connection method varies depending on the module type.	p. 129
Slot	Used to attach the module. The number of slots varies depending on the switch mainframe type.	p. 30
Channel	Channel inside the module. Specify the slot and channel and select the measuring object.	p. 30
Analog bus	Common analog signal inside the switch mainframe. The analog buses for 4 systems are built in. The analog bus to be used is determined based on the connection method.	p. 27
Channel relay	Switches the channel inside the module.	p. 27
Bus relay	Connects the measurement signal selected for the channel relay to the analog bus. It is built into the module. Switching the bus relay allows you to select the connection method.	p. 27
Connection method	You can select the measurement connection from 2-wire, 4-wire, or 4-terminal pair. Selecting a connection method determines the connection terminal for the instrument.	p. 28
Shield	For the measurement cable (cable for the measuring object). The destination to which the shield is connected inside the module can be switched. Switching the connection destination can reduce the influence of noise depending on the instrument to be used or the measurement environment.	p. 29
Scan	Switches the pre-registered channel (scan list) in sequence. Connecting the instrument and this device using EXT. I/O enables the channel to be switched and trigger measurement to be performed automatically.	p. 39

1.6 Measurement Flowchart

Thoroughly read “Usage Notes” (p. 4) beforehand.

Installation, connection, and turning on of power

Installing the device. (p. 4)

Attaching the module to the device. (p. 15)

Connecting the measurement cable to the module. (p. 18)

Connecting the device and the instrument using the connection cable. (p. 19)

Connecting the communications cable and making settings.

- Set the communication setting mode (p. 22).
- Connect the LAN, USB, or RS-232C cable to the PC (p. 59).

Connecting the device and the external control device. (for scan measurement)

- Connect the device to an external device such as a PLC using EXT. I/O (p. 49).

Connecting the power cord. (p. 23)

Turning on the power. (p. 23)

Inspection before measurement (p. 25)

Setting before measurement

Selecting the module connection method. (p. 28)

Switching the shield. (p. 29)

Selecting the channel to be measured. (p. 30)

Starting the measurement

Sending a measurement command to the instrument.

Receiving measurement results.

- For information on the measurement processing and receiving measurement results, see the instruction manual of the instruments to be used.

Ending the measurement

Turning off the power. (p. 23)

2 Preparation for Measurements

2.1 Connecting Instruments and Controlling the Device

This section describes how to connect one or more measuring instruments and control the device. A PC or PLC must be connected in order to control the device. A PC or PLC connection is also required in order to control instruments and acquire measured values.
The device utilizes the connection and control methods described below.

Basic control

Connect the PC to the device and instrument via separate communications interfaces.
Control the device to switch channels and control the instrument to configure settings, perform measurement, and acquire measured values.
See: “3.2 Overview of Channel Switching” (p. 27)

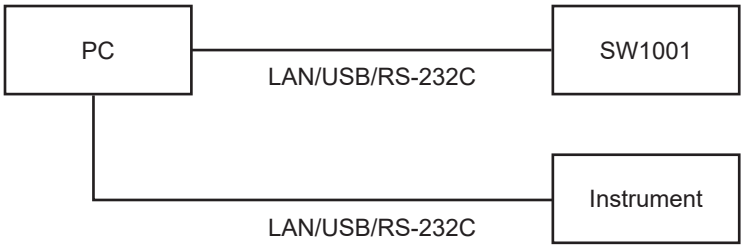

Controlling an instrument via the device

You can also use the device’s functionality for forwarding communication commands to control instruments simply by sending commands to the device.
See: “8.6 Communication Command Forwarding Function” (p. 69)

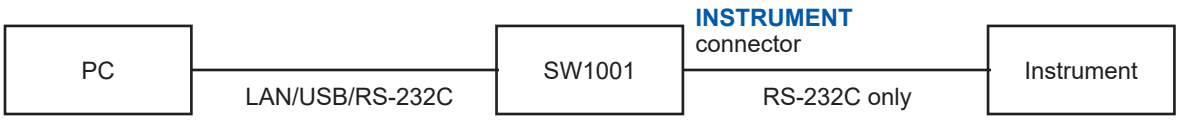

Performing automatic scan measurement using EXT. I/O

You can switch channels and perform a series of measurements in accordance with a previously created scan list by connecting the device and an instrument via the EXT. I/O interface. You can also acquire measured values by using the instrument’s data output function (to automatically send measured values) or memory function.
See: “4 Scan Function” (p. 39)

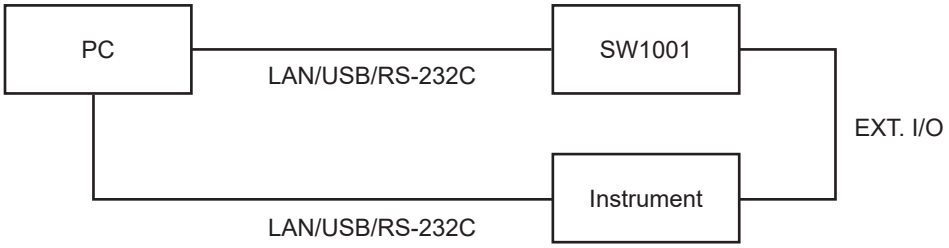

Performing automatic scan measurement using EXT. I/O (using the communication command forwarding function)

Furthermore, you can perform automatic scan measurement over a single communications interface by using the device's communication command forwarding function.

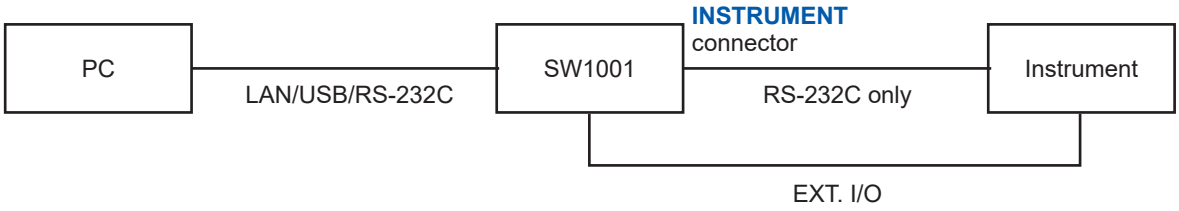

Connecting two instruments

You can perform measurement by connecting two instruments to the device.
See: "3.5 Measurement between Two Instruments" (p. 32)

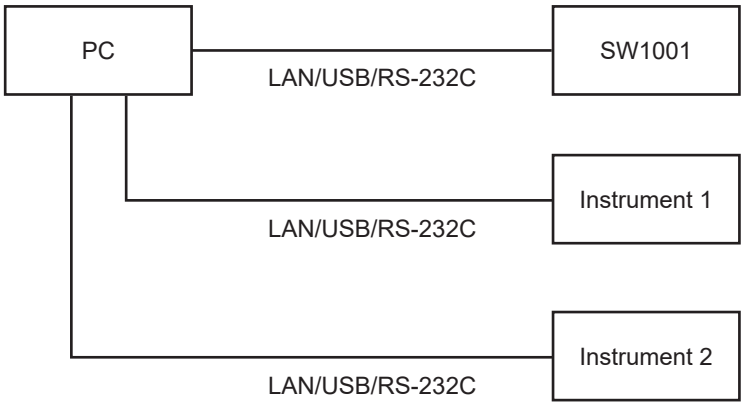

2.2 Installing the Module

Thoroughly read “Before installing the module” (p. 5) beforehand.

The following settings are initialized when you install a new module into a slot or change the type of module installed in a given slot.

- Connection method
- Shield switching
- Channel delay
- Scan list

Required items: Phillips screwdriver (No. 2), antistatic gloves

Front

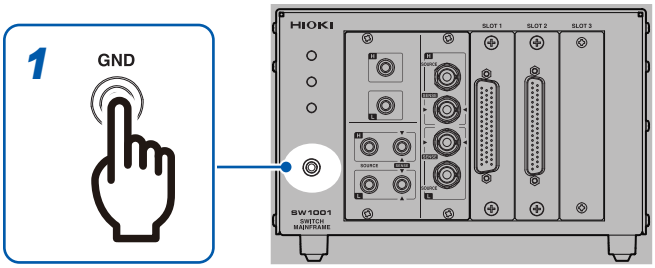

1 **Touch the GND terminal with bare hands.**

2 **Wear antistatic gloves.**

Rear

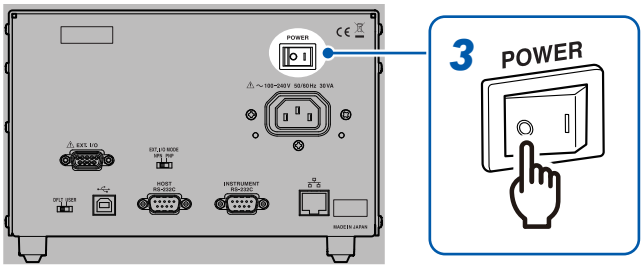

3 **Turn off the device.**

Front

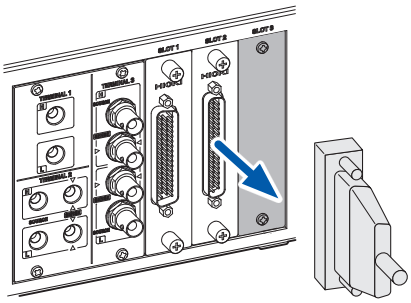

4 **Remove all the measurement cables connected to the device and module.**

(To prevent electric shock and short circuit of the measuring object.)

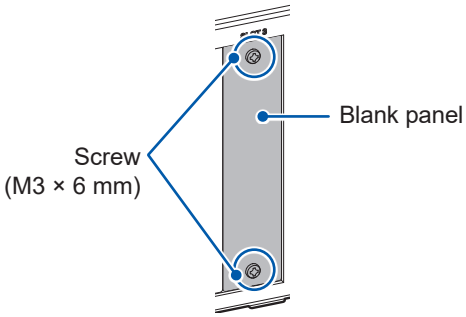

5 **Loosen the two screws (M3 × 6 mm) and then remove the blank panel.**

Store the blank panel and screws. You need the screws when using the device after removing the module.

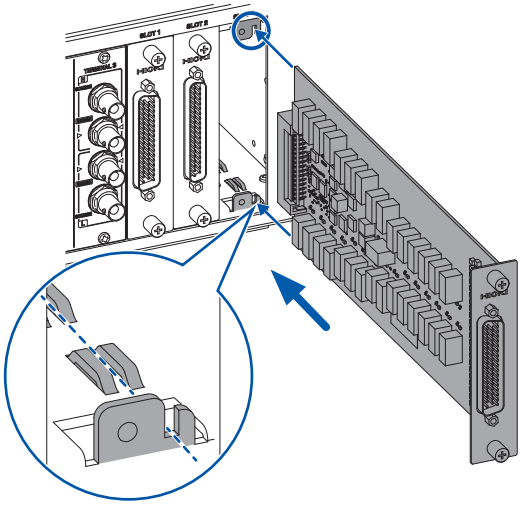

6 **Insert the module to the back.**

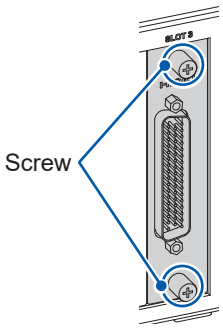

7 **Tighten the two screws to secure the module in place.**

2.3 Removing the Module

Required items: Phillips screwdriver (No. 2), antistatic gloves

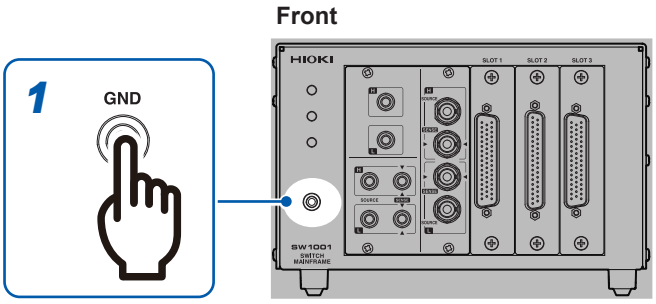

1 **Touch the GND terminal with bare hands.**

2 **Wear antistatic gloves.**

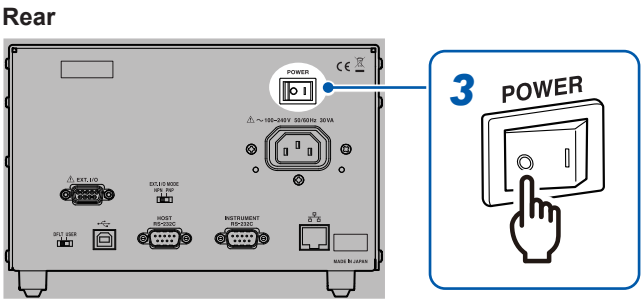

3 **Turn off the device.**

Front

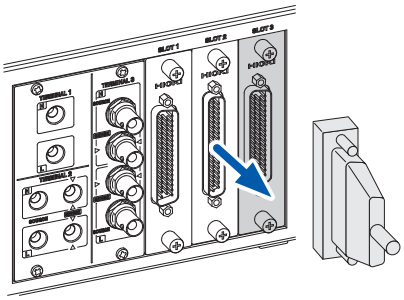

4 **Remove all the measurement cables connected to the device and module.**

(To prevent electric shock and short circuit of the measuring object.)

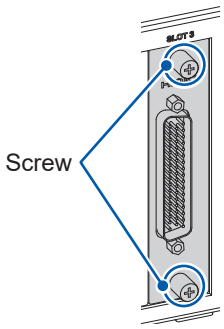

5 **Loosen the two screws.**

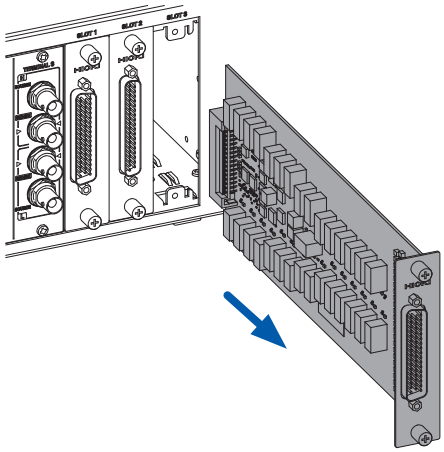

6 **Pull out the module.**

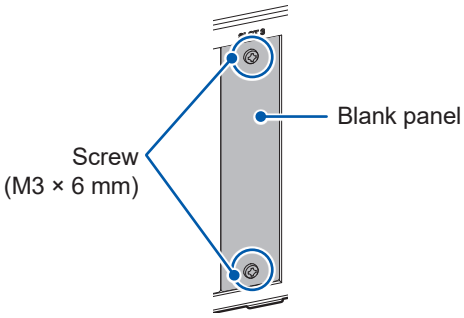

7 **Attach the blank panel and tighten the two screws (M3 × 6 mm) to secure the panel.**

2.4 Connecting the Measurement Cable

⚠ WARNING

Connect the measurement cable with the measuring object disconnected from the measurement cable. The measuring object may be shorted depending on the condition of the module switching circuit.

Please provide a suitable measurement cable.
See: “12.1 Measurement cable” (p. 147)

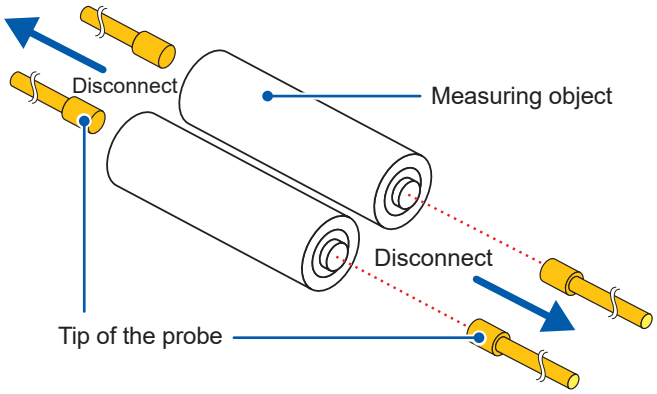

1 **Turn off the device.**

2 **Disconnect the probe from the measuring object.**

Front

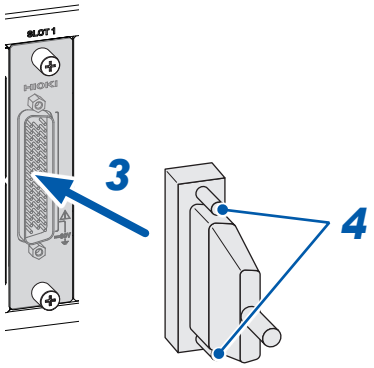

3 **Connect the measurement cable connector to the module’s connector.**

4 **Secure the measurement cable connector using the screws.**

For information on connecting the measuring object, see the instruction manual of each instrument.

2.5 Connecting the Connection Cable

The connection cable is optional (p. 2).

Connect the device to the instrument.
For information on connecting the instrument, see the instruction manual of each instrument.

Front

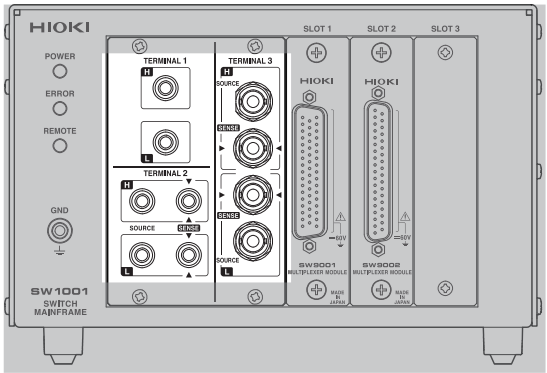

Select the terminal and connection cable to be connected based on the instrument to be connected.

Instrument example	Model	Terminal	Connection cable	Connection method	Module
Voltmeter	DM7276	**TERMINAL 1**	L4930	2-wire	SW9001
					SW9002
Battery tester	BT3562A	**TERMINAL 2**	L2108	4-wire	SW9001
Resistance Meter	RM3545A				
Battery tester	BT4560	**TERMINAL 3**	L2004	4-terminal pair	SW9002
LCR meter	IM3590				

⚠ CAUTION

TERMINAL 2 and **TERMINAL 3** are internally conducted. Do not connect the instrument to **TERMINAL 2** and **TERMINAL 3** at the same time. Doing so may damage the instrument.

TERMINAL 1

1 **Turn off the device.**

2 **Connect the connection cable to TERMINAL 1.**

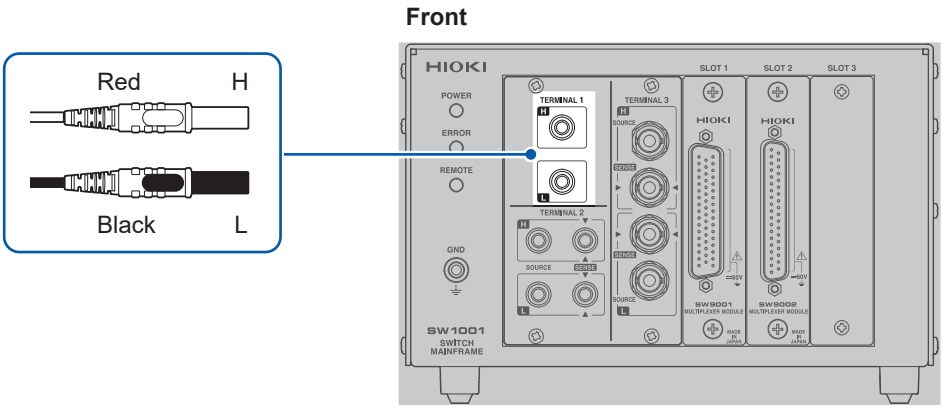

3 **Connect the other end of the connection cable to the instrument.**

TERMINAL 2

1 **Turn off the device.**

2 **Connect the connection cable to TERMINAL 2.**

Connect the connection cable so that the red ▼ mark of the device and the ▲ mark of the red lead wire match and the black ▼ mark of the device and the ▲ mark of the black lead wire match.

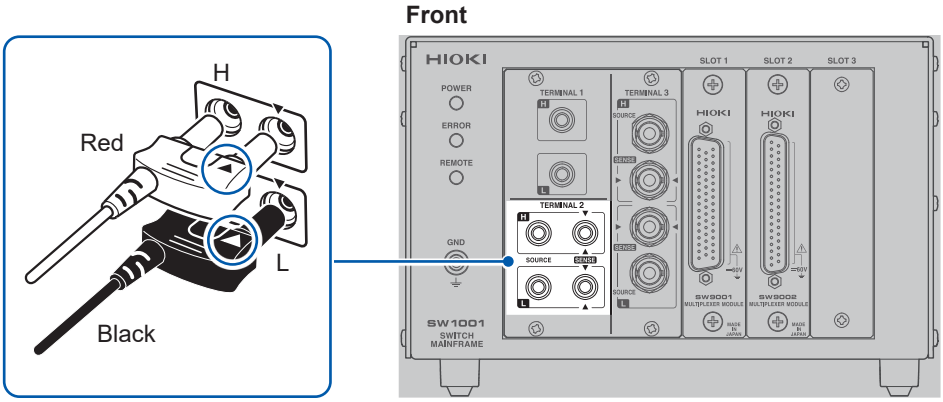

3 **Connect the other end of the connection cable to the instrument.**

TERMINAL 3

1 **Turn off the device.**

2 **Connect the connection cable to TERMINAL 3.**

Match the cable and the connection terminal signal.

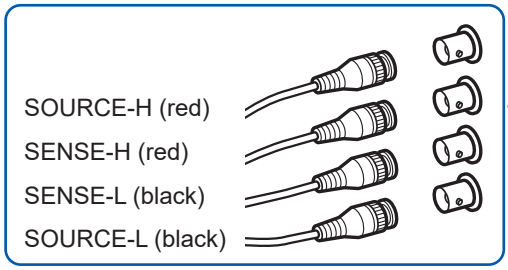

Front

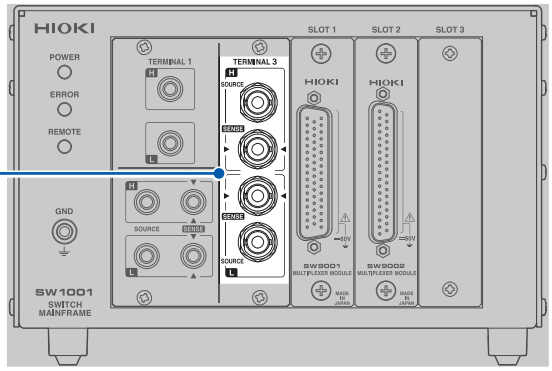

1. Check the direction of the grooves of the BNC connector. The grooves should fit into the connector guide of the device.

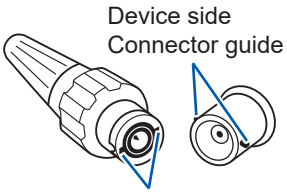

2. Align the grooves of the BNC connector with the connector guide of the device and insert the BNC connector.

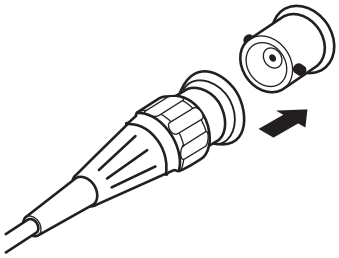

3. Turn the BNC connector to the right to lock it.

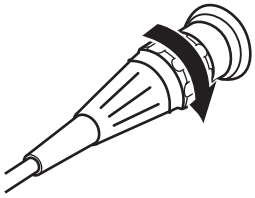

3 **Connect the other end of the connection cable to the instrument.**

Connection cable terminal	Instrument terminal	
	BT4560	IM3590
SOURCE-H (red)	SOURCE-H (red)	Hcur
SENSE-H (red)	SENSE-H (red)	Hpot
SENSE-L (black)	SENSE-L (black)	Lpot
SOURCE-L (black)	SOURCE-L (black)	Lcur

2.6 Setting the Communication Setting Mode

The device uses the communications interface for control.
You can select the fixed setting mode for initial communication settings or the user setting mode for user settings using the switch on the rear of the device.
Specify the communication settings according to the interface to be used in the user setting mode.
Reference: “8.1 Interface Overview and Features” (p. 59)

Rear

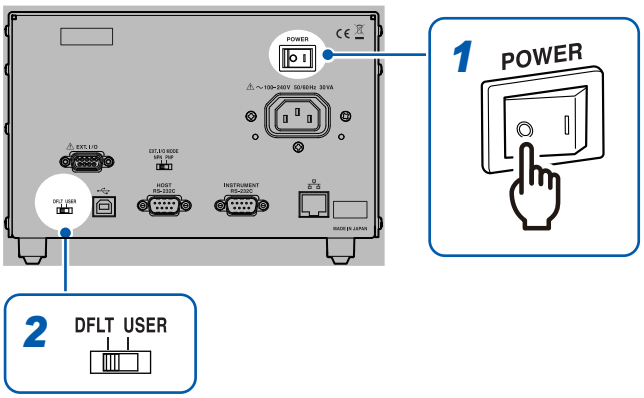

1 **Check that the power switch is off (○).**

2 **Change the communication setting mode using the communication setting mode switch.**

Switch	Communication setting mode	Device setting description
DFLT	Fixed setting mode	All of USB, RS-232C, and LAN can be used. Communications are performed using the specified communication settings.
		• USB No setting item
		• RS-232C Transmission speed: 9600 bps, data bits: 8; stop bit: 1; parity check: none; flow control: none
		• LAN IP address: 192.168.0.254 Subnet mask: 255.255.255.0 Default gateway: 0.0.0.0 (None) Communication command port number: 23
USER	User setting mode	All of USB, RS-232C, and LAN can be used. Use the communication settings that are specified using the following communication commands.
		• USB No setting item
		• RS-232C `:SYSTem:COMMunicate:RS232C:SPEED` <Transmission speed> Reference: “(8) RS-232C settings” (p. 103)
		• LAN `:SYSTem:COMMunicate:LAN:IPADdress` <IP address> `:SYSTem:COMMunicate:LAN:SMASk` <Subnet mask> `:SYSTem:COMMunicate:LAN:GATeway` <Gateway address> `:SYSTem:COMMunicate:LAN:CONTrol` <Port No.> `:SYSTem:COMMunicate:LAN:UPDate` Reference: “(9) LAN settings” (p. 103)

2.7 Connecting the Power Cord

Be sure to thoroughly read the separate document “Operating Precautions” before use.

Rear

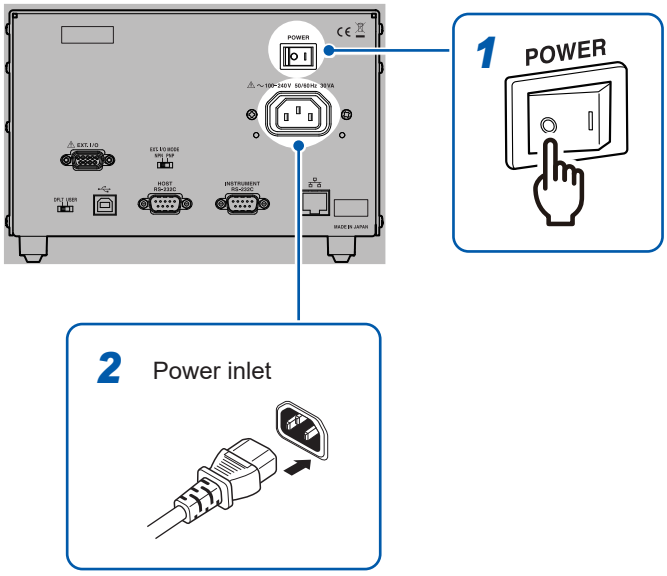

1. **Check that the power switch is off (○).**
2. **Check that the power voltage is within the range indicated on the rear of the device and connect the power cord to the power inlet.**
3. **Connect the plug of the power cord to the outlet.**

2.8 Turning on/off the Power

Use the power switch on the rear of the device to turn on/off the power.

Rear

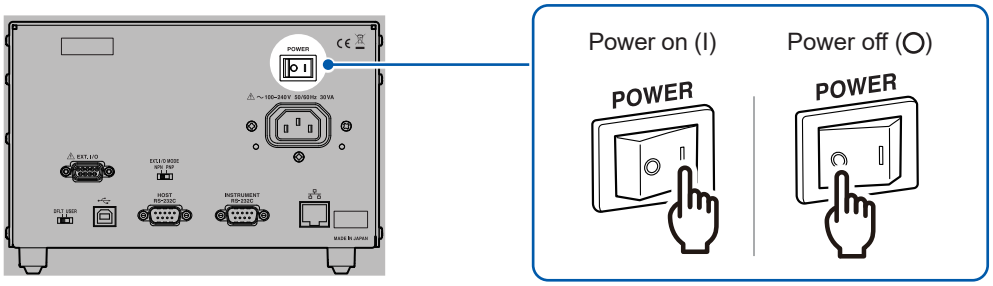

The front **POWER** lamp lights up when the device is turned on, and a self-test is executed. When an error occurs, the **ERROR** lamp on the front lights up. If an error occurs during self-test, communications and control using EXT. I/O become disabled.

Front

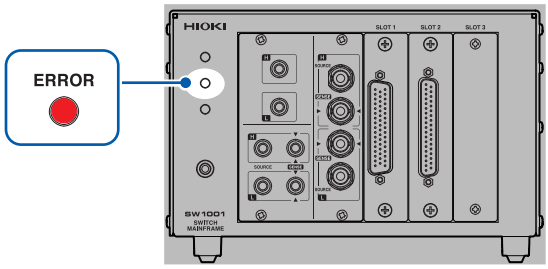

2.9 When the Power is Turned on

Item	Initialization description
Channel relay	All relays open
Bus relay	All relays open
EXT. I/O CLOSE output signal	Off
Connection method	Settings (for each slot) are saved with the settings backup command.
Shield switching	Settings (for each slot) are saved with the settings backup command.
Scan settings	Settings are saved with the settings backup command.
Channel delay settings	Settings are saved with the settings backup command.
Communication settings	Settings are saved with the settings backup command.

See: “Backing up settings” (p. 105)

3 Channel Switching

Thoroughly read "Usage Notes" (p. 4) beforehand.

3.1 Inspection before Measurement

Verify that it operates normally to ensure that no damage occurred during storage or shipping.
If you find any damage, contact your authorized Hioki distributor or reseller.

Inspecting the device and peripheral devices

Check item	Action
Is the sheath of the power cord normal without any damage or exposed metal part?	Damage may cause an electric shock or a short circuit accident. Do not use it. Contact your authorized Hioki distributor or reseller.
Are the sheaths of the measurement cables or connection cables to be used normal without any damage or exposed metal part?	Damage may cause an electric shock. Stop using it and replace it with a specified one.
Is the device normal without any damage?	

Checking for relay contact welding

If a relay contact welds, the battery of the measuring object may short or the channels may be connected in parallel, resulting in improper measurement.
You can check that the relays are not welded according to the following procedure.

1 **Short all the module terminals.**

2 **Send inspection command: `TEST:RELAYSHORT` <No. of slot to be inspected>`,CH`, and set the test state of the channel relay.**

Example: Inspect the channel relay of **SLOT 1**.

```
:TEST:RELAYSHORT 1,CH
```

3 **Check that the terminals of the shorted modules and the following points of the terminals on the main frame are not electrically connected.**

Continuity inspection points
TERMINAL 1, H
TERMINAL 1, L
TERMINAL 2, SENSE H
TERMINAL 2, SENSE L
TERMINAL 2, SOURCE H
TERMINAL 2, SOURCE L
TERMINAL 3, SOURCE H shield
TERMINAL 3, SOURCE L shield

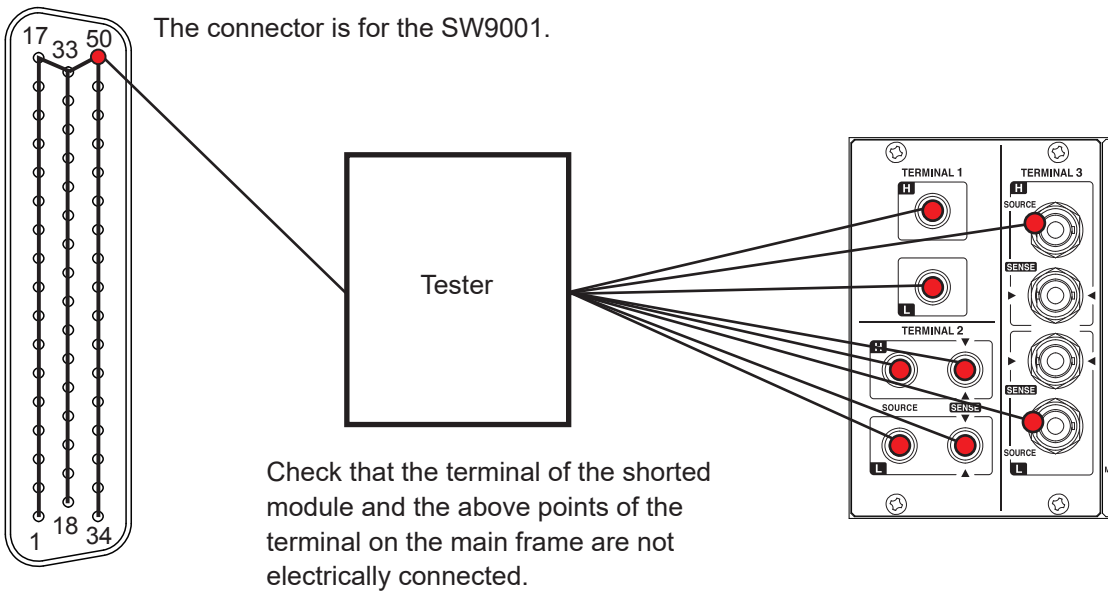

4 **Send inspection command: `TEST:RELAYSHORT` <No. of slot to be inspected>`,BUS`, and set the test state of the bus relay, then confirm step *3*.**

5 **Send inspection command: `TEST:RELAYSHORT` <No. of slot to be inspected>`,OPEN`, and end the inspection for this slot.**

6 **Perform steps *1* to *5* for all the slots.**

Module relay contact may be weld if it was conducted during inspection. Stop the use and contact your authorized Hioki distributor or reseller.

3.2 Overview of Channel Switching

This device connects to the internal analog bus by switching the relay of each module channel. The internal analog bus is connected to the terminal for connecting the instrument.
The device is all controlled by communication commands. For details about the command, refer to the description of each item.

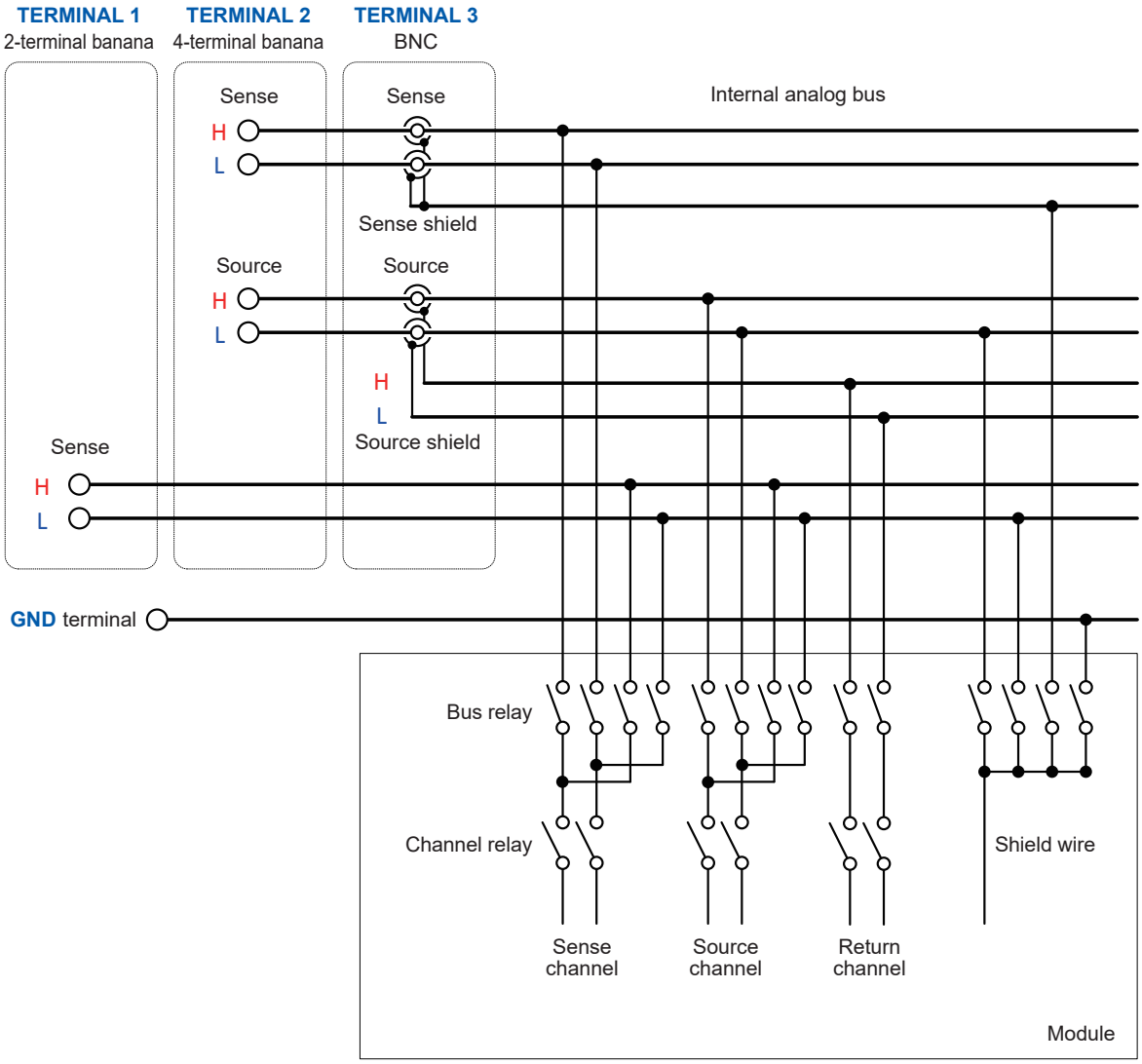

- The sense shield for **TERMINAL 3** (BNC terminal) is common (short circuit) for H and L.
- The diagram for wire connection inside the module is conceptual and differs from the actual module connection. See the wiring diagram for each module.
  Reference: Switching wiring diagram (p. 135, p. 142)

Select the channel to be measured using the channel relay and specify the terminal to which the channel is to be connected (select the connection method) using the bus relay. The selected channel can be measured using an instrument.

The sense and source for **TERMINAL 2** (4-terminal banana terminal) and **TERMINAL 3** (BNC terminal) use a common analog bus (electrically connected).

⚠ CAUTION

Do not connect **TERMINAL 2** and **TERMINAL 3** to the instrument at the same time. Doing so may damage the instrument.

3.3 Procedure for Switching the Channel

Switch the channel according to the following setting and procedure.
- Selecting the connection method
- Switching the shield
- Selecting the channel

Selecting the connection method

The connection method can be selected for each slot. Selecting the connection method determines the terminal of the connection destination (instrument).

Module	Connection method	Instrument example	Model	Terminal	Connection cable
SW9001	2-wire	Voltmeter	DM7276	**TERMINAL 1**	L4930
SW9002					
SW9001	4-wire	Battery tester	BT3562A	**TERMINAL 2**	L2108
		Resistance Meter	RM3545A		
SW9002	4-terminal pair	Battery tester	BT4560	**TERMINAL 3**	L2004
		LCR meter	IM3590		

Once the connection method is specified, it is retained. You do not have to specify the connection method every time the channel is switched.
Once the connection method is specified, all the channels become open. The shield wire is connected to the specified connection destination for each connection method. If you wish to switch a channel to another terminal, specify the connection method and then close the channel.
The number of channels that can be used varies depending on the module type and connection method as shown below.

Module	Connection method	Number of channels	Signal type	Signal to be used	Terminal to be used
SW9001	2-wire	22	Sense	CH1 to CH22	**TERMINAL 1**
	4-wire	11	Source	CH1 to CH11	**TERMINAL 2**
			Sense	CH12 to CH22	
SW9002	2-wire	6	Sense	Sense: CH1 to CH6	**TERMINAL 1**
	4-terminal pair	6	Source	Source: CH1 to CH6	**TERMINAL 3**
			Return	Return: CH1 to CH6	
			Sense	Sense: CH1 to CH6	

If the SW9001 is set to 4-wire and the 4-wire selection channel is “n”, the following signals are used in pairs.
Source: CH n
Sense: CH (n+11)

Item	Communication command
Setting procedure	`:SYSTem:MODule:WIRE:MODE` <slot number>`,`<`WIRE2/WIRE4/TP4`>
Setting example	Set **SLOT 1** to 2-wire. `:SYST:MOD:WIRE:MODE 1,WIRE2`
	Set **SLOT 5** to 4-terminal pair. `:SYST:MOD:WIRE:MODE 5,TP4`

Switching the shield

When the connection method is selected, the shield wire is connected to the specified connection destination.

Specified shield switching setting (shielding connection destination)

Module	Connection method	Shield connection destination
SW9001	2-wire	**TERMINAL 1**, LOW terminal
	4-wire	**GND**
SW9002	2-wire	**TERMINAL 1**, LOW terminal
	4-terminal pair	**TERMINAL 3**, sense shield terminal

The destination for shielding connection can be switched as necessary (for each slot).
Any time the connection method for a slot is changed, the switching shield will be reset to the specified value. To set the switching shield to a value other than the specified value, be sure to set the switching shield after setting the connection method.

Destination for shield wire connection to be selected

Module	Connection destination terminal
SW9001	Not connected
	GND
	TERMINAL 1, LOW terminal
	TERMINAL 2,**TERMINAL 3**, source LOW terminal
	TERMINAL 3, sense shield terminal
	TERMINAL 1, LOW terminal + **TERMINAL 3**, sense shield terminal
SW9002	Not connected
	GND
	TERMINAL 1, LOW terminal
	TERMINAL 3, sense shield terminal

For the SW9001, the [**TERMINAL 1**, LOW terminal + **TERMINAL 3**, sense shield terminal] shielding connection destination terminal should only be used when connecting a BT3562, BT3562A series (BT3562, BT3563, BT3561A, BT3562A, BT3563A) and DM7275 series (DM7275, DM7276) at the same time when the DM7275/DM7276 contact check function is not operating properly.

Once the connection destination is specified, it is retained until the connection method is changed.
You do not have to specify the connection destination every time the channel is switched.
When the switching shield is set, all channels are set to open.
The source terminal for **TERMINAL 2** and sense terminal are common for **TERMINAL 3**.

Item	Communication command
Setting procedure	`:SYSTem:MODule:SHIeld` <slot No.>,`<OFF/GND/TERMinal1/TERMinal2/TERMinal3/T1T3>`
Setting example	Set the shield wire connection destination for **SLOT 1** to GND. `:SYST:MOD:SHI 1,GND`
	Set the shield wire connection destination for **SLOT 5** to “not connected”. `:SYST:MOD:SHI 5,OFF`

Selecting the channel

Select the slot and channel No.
When the channel is selected, the specified slot of channel relay is closed, as well as the bus relay is also closed due to the connection method.

Item	Communication command
Setting procedure	`[ROUTe]: CLOSe` <Slot and channel No.> <Slot and channel No.> = Slot No. × 100 + CH No.
Setting example	Select CH7 of **SLOT 1.** `:CLOS 107`
	Select CH22 of **SLOT 12.** `:CLOS 1222`

Item	Communication command
Setting procedure	`[:ROUTe]:OPEN`
Setting example	Open all channels. `:OPEN`

Restriction

Multiple channels cannot be closed simultaneously.

Waiting for channel selection (switching) to complete

Switching operation is triggered by the channel selection command.
You can verify whether channel switching operation has completed by receiving the next query response. The switching operation time is included in the channel delay time.
See: "3.7 Channel Delay Function" (p. 37)

Waiting for channel switching operation to complete

Item	Communication command
Confirming procedure	`*OPC` Response: `1` Waits for the present operation to complete and returns the value 1. The subsequent command will be made to wait until this command completes.

Confirming example	Select CH7 of **SLOT 1** and wait for switching operation to complete.
	`:CLOS 107`
	`*OPC?`
	`1` (receive a response = switching operation complete)

3.4 Channel Switching Operation

When the channel is selected (closed), channel switching is performed according to the following flow.

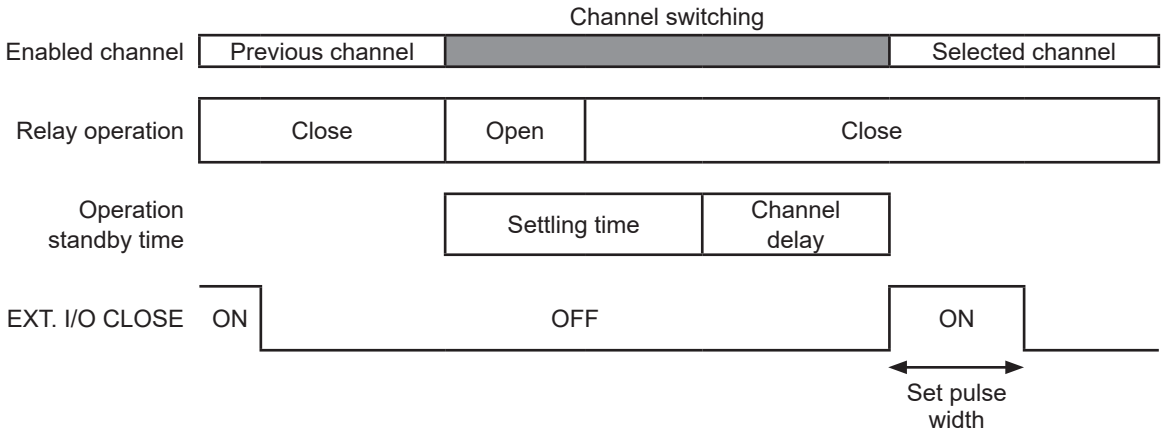

If the next channel is closed before the CLOSE signal pulse reaches the set pulse width, CLOSE signal pulse will automatically turn off.
After the previous channel relay is opened, the selected channel relay is closed (break before make).
Channel switching cannot be overlapped (make before break).
In channel switching within the same slot, the bus relay is not opened and only the channel relay is switched.
If the channel for a different slot is selected, the bus relay and channel relay of the previous slot are opened and the bus relay and channel relay of the selected slot are closed.

After the channel relay is closed and then the settling time that is automatically set and the channel delay time that is specified by the customer elapse, channel switching operation is complete and the CLOSE output signal of EXT. I/O is turned on (pulse output at the set pulse width).

3.5 Measurement between Two Instruments

Changing the connection method enables measurement to be performed by switching between two instruments according to the application.

Example: Measure the internal resistance of 8 batteries using BT3562A and measure the OCV using DM7276. (Use SLOT 1, 4-wire, CH1 to CH8.)

1 Connect BT3562A to TERMINAL 2 and DM7276 to TERMINAL 1.

Instrument	Measurement item	Module	Connection method	Channel selection	Terminal to be used
BT3562A	Internal resistance	SW9001	4-wire	SLOT 1, CH1	TERMINAL 2
				SLOT 1, CH2	
				SLOT 1, CH3	
				⋮	
				SLOT 1, CH8	
DM7276	OCV	SW9001	2-wire	SLOT 1, CH12	TERMINAL 1
				SLOT 1, CH13	
				SLOT 1, CH14	
				⋮	
				SLOT 1, CH19	

2 Set the connection method of SLOT 1 to 4-wire.

The signal is connected to TERMINAL 2.

3 Repeat channel selection and measurement using BT3562A for 8 channels (internal resistance measurement).

4 Set the connection method to 2-wire.

The signal is connected to TERMINAL 1.

5 Repeat channel selection and measurement using DM7276 in the same way as for internal resistance measurement (OCV measurement).

The sense wire for 4-wire CH1 to CH8 corresponds to 2-wire CH12 to CH19.

Control example using communication command	
[SW1001] :SYST:MOD:WIRE:MODE 1,WIRE4	Set the **SLOT 1** connection method to 4-wire (connect to **TERMINAL 2**).
[SW1001] :CLOSE 101	Select **SLOT 1**, CH1.
[SW1001] *OPC?	Check that the channel relay has been closed.
[SW1001] 1	Receive a response “1” to the *OPC? query.
[BT3562A] :READ?	Execute single measurement using BT3562A.
[BT3562A] 1.0258E-3	Receive measured values.
[SW1001] :CLOSE 102	Select the next CH2.
...	(Repeat until CH8.)
[SW1001] :SYST:MOD:WIRE:MODE 1,WIRE2	Set the **SLOT 1** connection method to 2-wire (connect to **TERMINAL 1**).
[SW1001] :CLOSE 112	Select **SLOT1**, CH12 (4-wire CH1 sense).
[SW1001] *OPC?	Check that the channel relay has been closed.
[SW1001] 1	Receive a response “1” to the *OPC? query.
[DM7276] :READ?	Execute single measurement using DM7276.
[DM7276] +03.764987E+00	Receive measured values.
[SW1001] :CLOSE 113	Select the next CH13 (4-wire CH2 sense).
...	(Repeat until CH19.)

Example: Measure the internal resistance of 8 batteries using BT3562A and measure the OCV using DM7276. Then measure the external potential for batteries using the DM7276. (Use SLOT 1, 4-wire, CH1 to CH8 for internal resistance and OCV measurement. Use SLOT 2, 2-wire, CH1 to CH8 for external potential measurement for batteries.)

1 **Connect BT3562A to TERMINAL 2 and DM7276 to TERMINAL 1.**

Instrument	Measurement item	Module	Connection method	Channel selection	Terminal to be used
BT3562A	Internal resistance	SW9001	4-wire	**SLOT 1**, CH1	**TERMINAL 2**
				SLOT 1, CH2	
				SLOT 1, CH3	
				⋮	
				SLOT 1, CH8	
DM7276	OCV	SW9001	2-wire	**SLOT 1**, CH12	**TERMINAL 1**
				SLOT 1, CH13	
				SLOT 1, CH14	
				⋮	
				SLOT 1, CH19	
DM7276	External potential measurement for batteries	SW9001	2-wire	**SLOT 2**, CH1	**TERMINAL 1**
				SLOT 2, CH2	
				SLOT 2, CH3	
				⋮	
				SLOT 2, CH8	

2 **Set the connection method of SLOT 1 to 4-wire.**

The signal is connected to **TERMINAL 2**.

3 **Repeat channel selection and measurement using BT3562A for 8 channels (internal resistance measurement).**

4 **Set the connection method to 2-wire.**

The signal is connected to **TERMINAL 1**.

5 **Repeat channel selection and measurement using DM7276 in the same way as for internal resistance measurement (OCV measurement).**

The sense wire for 4-wire CH1 to CH8 corresponds to 2-wire CH12 to CH19.

6 **Set the connection method of SLOT 2 to 2-wire.**

Use **SLOT 2** for external potential for batteries since the measurement points are different.
The signal is connected to **TERMINAL 1**.

7 **Repeat channel selection and measurement using DM7276 (external potential measurement for batteries).**

Control example using communication command		
[SW1001]	:SYST:MOD:WIRE:MODE 1,WIRE4	Set **SLOT 1** to 4-wire (connect to **TERMINAL 2**).
[SW1001]	:CLOSE 101	Select **SLOT 1**, CH1.
[SW1001]	*OPC?	Check that the channel relay has been closed.
[SW1001]	1	Receive a response “1” to the *OPC? query.
[BT3562A]	:READ?	Execute single measurement using BT3562A.
[BT3562A]	1.0258E-3	Receive measured values.
[SW1001]	:CLOSE 102	Select the next CH2.
...		(Repeat until CH8.)
[SW1001]	:SYST:MOD:WIRE:MODE 1,WIRE2	Set **SLOT 1** to 2-wire (connect to **TERMINAL 1**).
[SW1001]	:CLOSE 112	Select **SLOT 1**, CH12 (4-wire CH1 sense).
[SW1001]	*OPC?	Check that the channel relay has been closed.
[SW1001]	1	Receive a response “1” to the *OPC? query.
[DM7276]	:READ?	Execute single measurement using DM7276.
[DM7276]	+03.764987E+00	Receive measured values.
[SW1001]	:CLOSE 113	Select the next CH13 (4-wire CH2 sense).
...		(Repeat until CH19.)
[SW1001]	:SYST:MOD:WIRE:MODE 2,WIRE2	Set **SLOT 2** to 2-wire (connect to **TERMINAL 1**).
[SW1001]	:CLOSE 201	Select **SLOT 2**, CH1.
[SW1001]	*OPC?	Check that the channel relay has been closed.
[SW1001]	1	Receive a response “1” to the *OPC? query.
[DM7276]	:READ?	Execute single measurement using DM7276.
[DM7276]	+00.257139E+00	Receive measured values.
[SW1001]	:CLOSE 202	Select the next CH2.
...		(Repeat until CH8.)

3.6 Precautions for Measurement

Use in combination with BT3562 or BT3563

Contact check does not operate properly at 3000 Ω range. Also be aware that contact check cannot be performed properly in the voltage function, either.

Use in combination with BT3561A, BT3562A or BT3563A

It may take some time for measured voltage value to be stabilized (such as when connecting a channel from open state). When the measured voltage value is unstable, set the channel delay time to 100 ms or longer.

Use in combination with BT4560

Use the device with BT4560 for external trigger measurement or single measurement using the `:READ?` command.
When using the device for internal trigger (free running), the life time of the relay is shortened as the channel is switched during measurement (hot switching).
As the measurement current for BT4560 is 1.5 A (3 mΩ range), heat generation at the relay contact becomes high. With heat generation, the thermoelectric power may become high.

Use in combination with DM7275 or DM7276

If a measurement accuracy of a few μV is required, there is an effect by the thermoelectric power due to coil heating of the channel relay. Minimize the close time of each channel to reduce this effect as much as possible. Use single measurement using the `:READ?` command or external trigger and open the channel immediately after the measurement (heating from the relay coil is controlled).
Measured value variation may be significant when connected at the same time as the IM3590.
If you encounter this issue, enable the IM3590's trigger synchronous output function.

Use in combination with IM3590

Execute open correction and short correction to each channel you will use.
Error might occur to open correction and short correction due to high frequency. (Set the frequency range you will correct when executing.)
Threshold value of the contact check might be larger than the setting.
Also, the inspection result of the contact state (the resistance value near the threshold) might vary.

Use in combination with RM3545 or RM3545A

When the instrument is used with its offset voltage compensation function (OVC) disabled, the thermoelectromotive force generated by the coils of the channel relays generating heat will affect measured resistance values. It is recommended that measurement be performed with as little time as possible after the contact of the channel relay is closed (however, if the object to be measured is a component that takes a long time to respond, such as a coil, it is necessary to wait for the time required for response before starting measurement). Suppose the contact of the channel relay in high-temperature conditions (after the channel was closed for a certain period or after measurement was repeated while the channel was being switched) was closed after being opened for a few seconds or a few minutes. In such a case, the thermoelectromotive force at the contact of the relay may not be stable, shifting measured resistance values. If this happens, allow a few seconds to a few minutes for the stabilization time to check that the measured value stabilizes. For measurement of high-resistance (100 kΩ or more) components, measured values may not be stable due to the effect of noise, including hum.

Relay operation time and stability time

The relay open/close operation waits for a contact operation time (settling time). The settling time is as follows.

Channel switching time	
Relay open settling time	Relay close settling time

Settling time

Relay open	Relay close	Channel switching
5 ms	5 ms	11 ms

The relay contact operation is completed within the settling time, however, it may take some time for the relay to be stabilized depending on the instrument to be used or measuring object. Set the channel delay time or perform measurement after a sufficient delay time on the instrument.

Preventing relay contact welding

The relay contact may weld when relay switching is repeated with a large current flowing (also when the measuring object or instrument to be connected is capacitive). When relay contact welding occurs, the measuring object may be shorted. Periodic inspection is recommended.
Reference: "Checking for relay contact welding" (p. 26)

Influence of thermoelectric power

Be aware of the thermoelectric power when a voltage accuracy of a few μV is required.
Install the device and instrument in a constant temperature environment and fully adjust them to the ambient temperature before use.
Especially prevent uneven temperatures at the terminal.
When creating a measurement cable, use a connector and terminal of a material with low thermoelectric voltage, such as brass (nickel plate), pure copper (+ gold plate), etc.
Exercise care to keep the contact surface clean.

High resistance and minute current measurement

In a high humidity environment, high resistance or minute current measurement may be affected by leak current.
Do not touch the module board with your bare hand. Grease can cause leak current, which may affect high resistance and minute current measurement.
Do not bundle the measurement cables when measuring minute current. Doing so may cause leak current due to the capacity of the cables, resulting in an error in the measured value.

Caution regarding noise

Do not bundle the measurement cables or connection cables for the instrument and the power line. Noise on the power line may cause malfunction of channel switching or an error in the measured value.
When the measured value cannot be stabilized due to noise, connecting the ground (**GND** terminal) of the device and the ground of the instrument may improve the condition.

Caution regarding load

When a load is applied to the measurement cable, the contact area of the connector becomes unstable and the contact resistance is increased, which can cause the measured value to be unstable.
When attaching the module to the main frame, be sure to secure the panel using screws. If the panel cannot support the load when a vertical load is applied to the main frame, the module board is stressed and may malfunction.

3.7 Channel Delay Function

The delay time after channel switching can be specified. When the specified delay time elapses after the channel relay is closed, a CLOSE signal of EXT. I/O is output.
If the measurement response time for the instrument needs to be ensured, set the delay time.
The required delay time depends on the instrument to be used and the measuring object.

Channel delay time setting example

Model	Delay time
BT4560	1 ms
BT3562A	10 ms
3561	3 ms
DM7276	0 ms

The channel delay time can be specified for each slot. The same delay time is used for all channels within the slot.

For the switching sequence, see "3.4 Channel Switching Operation" (p. 31)

Item	Communication command
Setting procedure	`:SYSTem:MODule:DELay` <slot No.>,<delay time `0` to `9.999[s]`>

Setting example	Set the channel delay time for **SLOT 1** to 0.01 sec. and for **SLOT 2** to 0 sec.
	`:SYST:MOD:DEL 1,0.01`
	`:SYST:MOD:DEL 2,0`

4 Scan Function

Thoroughly read "Usage Notes" (p. 4) beforehand.

4.1 Overview of the Scan Function

For scanning, specify the channel range (scan list) in advance and switch the channel in order. Channel switching (scan channel moving forward) can be performed using EXT. I/O or communications. Connecting the switch mainframe and the instrument EXT. I/O can switch the channel and perform measurement in synchronization with the instrument.

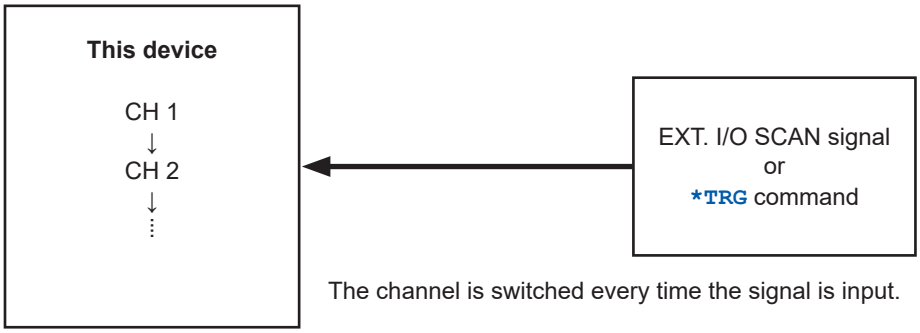

Scanning in combination with the instrument

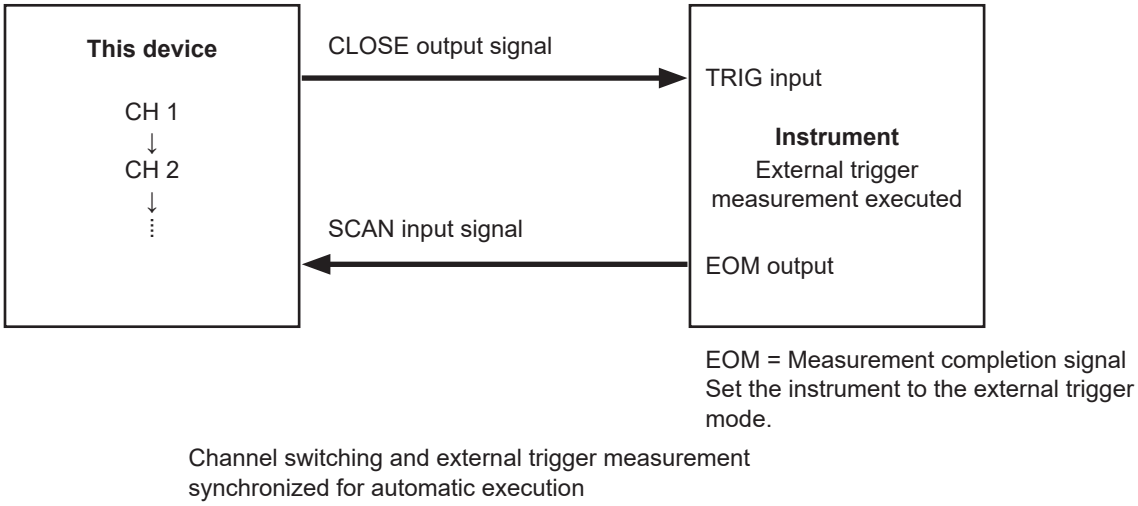

Precautions when performing a scan when the device and instrument are connected via EXT. I/O

- Only one instrument can be used.
- Use either the instrument's data output function or its memory function to acquire measured values from the scan. For more information, please see the instrument's instruction manual.
- The EOM signal from the instrument may cause scan measurement to resume even if it has been stopped using the SCAN_RESET signal or the `:ABORt` command.

For the EXT. I/O signal, see "Signal Functions" (p. 52).

4.2 Setting the Scan Channel

The channels to be scanned need to be registered as a scan list.
Specify the start and end channels. An individual channel list can also be specified.

Item	Communication command

Setting procedure	`[:ROUTe]:SCAN<(@Channel list)>`
	`<(@Channel list)>`
	Channel list format
	`<CH>,<CH>,...,<CH>` Specify the channels to be measured individually.
	`<CHm>:<CHn>` Specify from CHm to CHn consecutively.

Setting example	Scan CH1 of **SLOT 1** to CH22 of **SLOT 3**. `:SCAN 101:322`
	Scan CH1 and CH2 of **SLOT 1** and CH1, CH2, and CH5 of **SLOT 2**. `:SCAN (@101,102,201,202,205)`

4.3 Setting the Trigger Source for Scan Operation

A trigger source for scan operation is set for STEP only.

Trigger source	Scan operation
STEP	Scanning is started by the SCAN input signal or `*TRG` command (the first channel is closed). Then the next scan channel is scanned every time the SCAN input signal or `*TRG` command is sent. STEP is set as the default setting. Normally select STEP and execute scanning while synchronizing with control of the instrument.

The commands to be set are as follows.

Item	Communication command

Setting procedure	`:TRIGger:SOURce <STEP>`
	`<STEP>`
	STEP:
	External trigger. Scanning is performed with the SCAN input signal of EXT. I/O or the `*TRG` command. Scan operation moves along the steps every time the trigger is input.

Setting example	Set to proceed with the next step every time the external trigger is input. `:TRIG:SOUR STEP`

4.4 Scan Operation

Scanning is started by the SCAN signal of EXT. I/O or the communication `*TRG` command. The scan channel is moved forward by the SCAN signal or the `*TRG` command.
When the channel is the final channel, scanning is completed by the SCAN signal or the `*TRG` command, and all relay is opened and goes back to the beginning of the scan list. Note that scan operation will not complete until another SCAN signal or `*TRG` command is input in the final channel state.

Scan operation when the trigger source is set to STEP

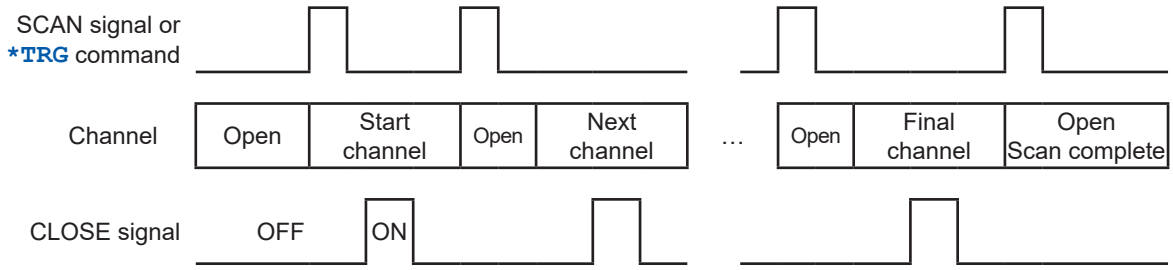

The CLOSE signal is output in pulses. The pulse width can be set using the following command: `IO:PULSe:TIME <0.001 to 0.100/MIN/MAX/DEF>`. (See p. 102.)
If the next channel is closed before the CLOSE signal pulse reaches the set pulse width, CLOSE signal pulse will automatically turn off.

Item	Communication command	
Setting procedure	`*TRG`	Starts scanning and proceeds along the scan channels.
	`:ABORt`	Aborts scan operation and returns to the beginning of the scan channel.
Setting example	Executes scanning twice from CH1 of **SLOT 1 to** CH22 of **SLOT 3**.	
	`:SCAN 101:322`	
	`:TRIG:SOUR STEP`	Advances the scan channel one step at a time using the `*TRG` command (or SCAN signal).
	`*TRG`	(Repeats for the number of channels.)
	`*TRG`	Scan operation complete by final channel state.
	Scanning is performed again after completion.	
	`*TRG`	(Repeats for the number of channels.)
	`*TRG`	Scan operation complete by final channel state.
	Aborts scan operation and restarts from the beginning.	
	`:SCAN 101:322`	
	`:TRIG:SOUR STEP`	Advances the scan channel one step at a time using the `*TRG` command (or SCAN signal).
	`*TRG`	(Repeats.)
	`:ABOR`	(Aborts scan operation and returns to the beginning of the scan channel.)
	`*TRG`	(Repeats for the number of channels from the first channel.)

All channels are open after scanning is stopped.
The following commands are disabled during scanning.
- Setting the connection method
- Setting the shield switching
- Channel switching
- Setting the channel delay
- Setting the scan list
- Setting concerning the EXT. I/O
- Channel control due to CLOSE command

4.5 Resetting Scan Operation

Scanning is reset and stopped by the SCAN_RESET signal of EXT. I/O or the communication `:ABORt` command. All channel relays are opened and goes back to the beginning of the scan list.

4.6 Scan Measurement Example

The following example shows scan measurement with the SW1001 and BT3562A connected using EXT. I/O.
For acquiring measured values, the BT3562A data output function is used.

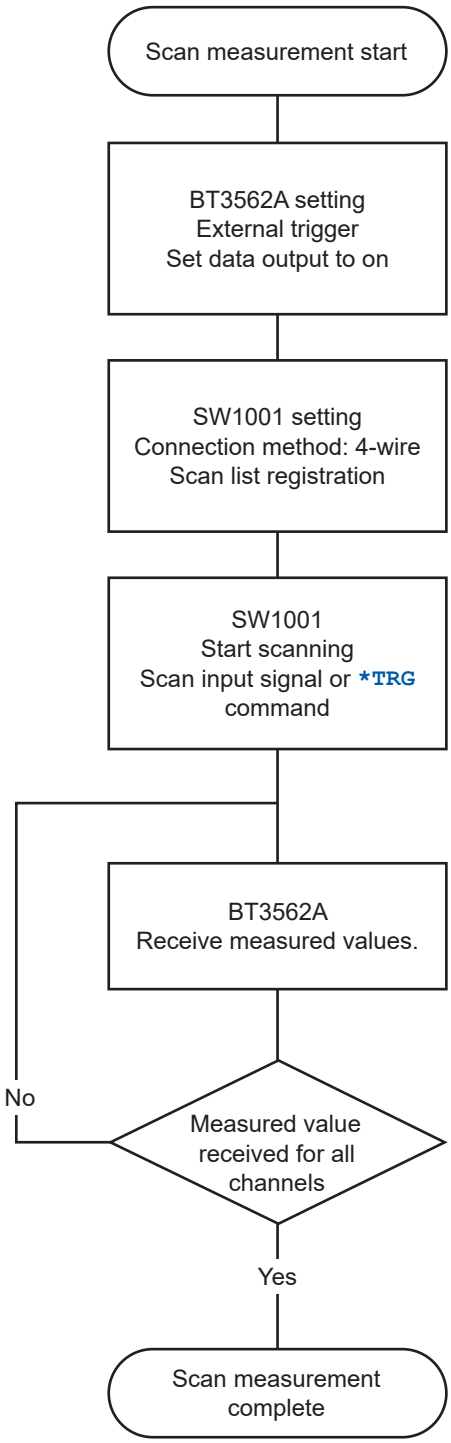

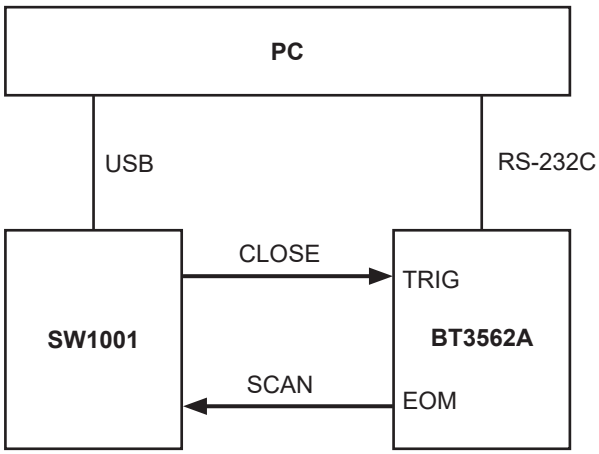

Wiring diagram

5 Other Functions

5.1 Checking the Device Status

The following items can be checked using the free software for the SW1001 series (downloaded from our website).

- Module information of each slot
  Slot position, model, serial number, and opening/closing frequency of each relay

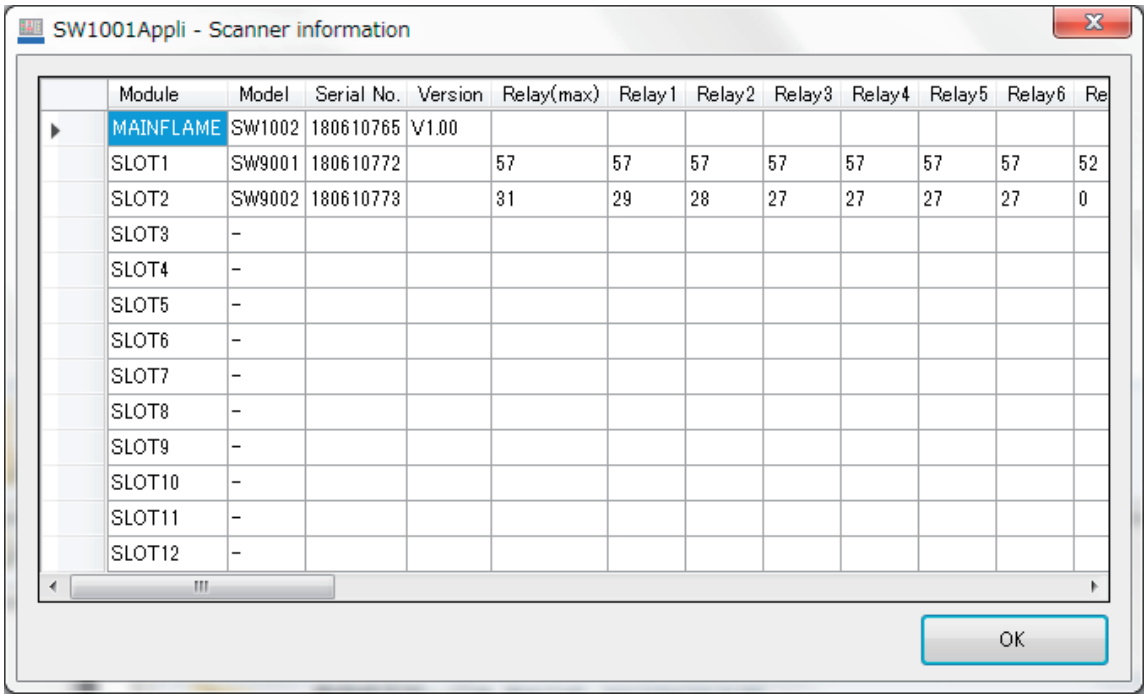

Module	Model	Serial No.	Version	Relay(max)	Relay1	Relay2	Relay3	Relay4	Relay5	Relay6	Re
MAINFLAME	SW1002	180610765	V1.00								
SLOT1	SW9001	180610772		57	57	57	57	57	57	57	52
SLOT2	SW9002	180610773		31	29	28	27	27	27	27	0
SLOT3	-										
SLOT4	-										
SLOT5	-										
SLOT6	-										
SLOT7	-										
SLOT8	-										
SLOT9	-										
SLOT10	-										
SLOT11	-										
SLOT12	-										

Use the information as a reference for the relay lifetime.

6 Initialization

6.1 Initialization Settings

The device is in the initial state at the time of shipment and at the time of initialization using commands. However, communications settings will not be initialized if the initialization is triggered by command.
Settings that are backed up can be stored so that they persist even when the power is turned off by executing the `:SYSTem:BACKup` command.
See: “Backing up settings” (p. 105)
Communications settings are backed up even if the `:SYSTem:BACKup` command is not executed.

✓: Yes, –: No

Item	Initialization description	Backup
Channel relay	All relays open	–
Bus relay	All relays open	–
EXT. I/O CLOSE output signal	OFF	–
Connection method	SW9001: 2-wire SW9002: 4-terminal pair	✓
Shield switching	SW9001: **TERMINAL 1**, LOW terminal SW9002: **TERMINAL 3**, sense shield terminal	✓
Channel delay settings	0.0 s	✓
Scan list	None	✓
Scan operation trigger source	STEP	✓
Query forwarding timeout	10 s	✓
EXT. I/O filter function	OFF, 0.05 s	✓
Pulse width of CLOSE output signal	0.005 s	✓
Communication settings (USB)	(No setting item)	–
Communication settings (RS-232C)	9600 bps	✓
Communication settings (LAN)	User setting mode (setting switch: **USER**) IP address: 192.168.0.254 Subnet mask: 255.255.255.0 Default gateway: 0.0.0.0 (None) Communication command port number: 23	✓
	Fixed setting mode (setting switch: **DFLT**) IP address: 192.168.0.254 Subnet mask: 255.255.255.0 Default gateway: 0.0.0.0 (None) Communication command port number: 23	–

7 External Control (EXT. I/O)

Thoroughly read “Before starting the external control” (p. 6) beforehand.

Connecting the instrument and the EXT. I/O terminal allows you to perform measurement in synchronization with channel switching when using the scan function. Also scan control can be performed from the PLC and other devices.

All signals are isolated from the switching circuit, communication circuit, and ground (earth) (the common terminal for I/O is shared).
The input circuit can be switched so that it can support sinking current output (NPN) or sourcing current output (PNP).
Check the input/output rating and internal circuit configuration, and then understand the safety precautions. After that, connect the instrument or control system and use it in a correct manner.

Rear

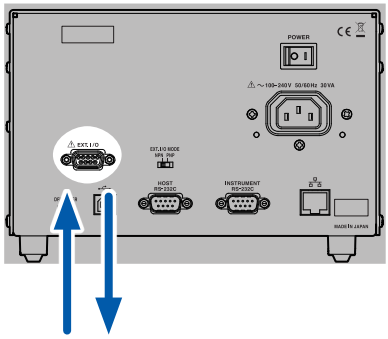

Signal output or input

7.1 External Control Flow

Check the I/O specifications of the instrument and external device to be connected.

↓

Setting NPN/PNP in the device (p. 50).

↓

Connecting the device and the external device (p. 51).

7.2 Switching between Sinking Current (NPN) and Sourcing Current (PNP)

Thoroughly read “Before starting the external control” (p. 6) beforehand.

The applicable PLC type can be changed using the **EXT. I/O MODE** change-over switch. It is set to NPN at the time of shipment.

	EXT. I/O MODE change-over switch settings	
	NPN	PNP
Device input circuit	Supports sinking output.	Supports sourcing output.
Device output circuit	Non-polar	Non-polar
ISO_5 V output	+5 V output	–5 V output

Rear

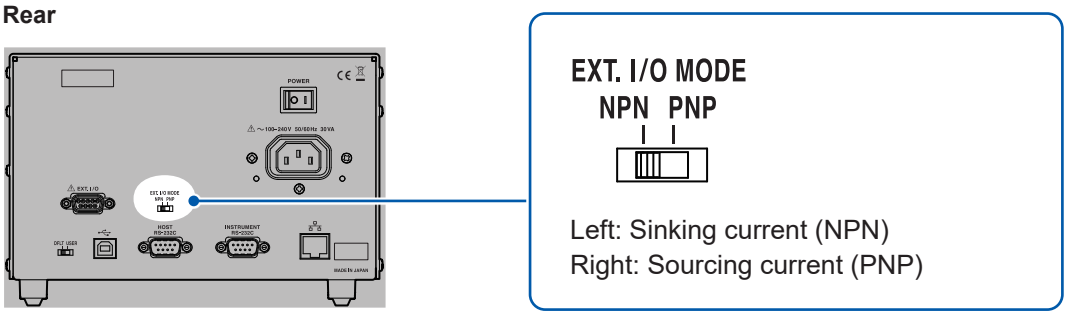

7.3 Connection

Device connector and compatible connectors

Thoroughly read “Before starting the external control” (p. 6) beforehand.

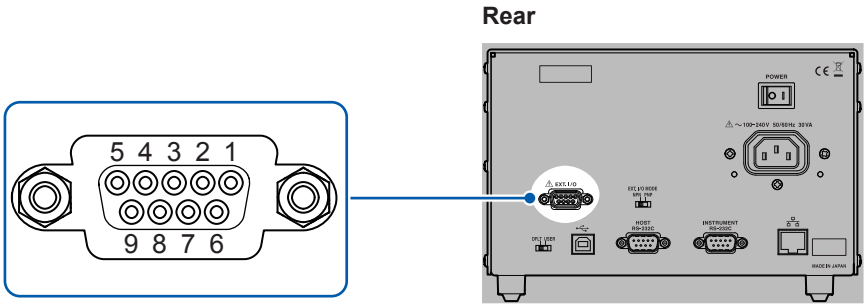

Connectors used (device unit side)

- D-SUB 9-pin
  Female #4-40 inch screw

Compatible connectors

- DE-9P-ULR (solder type)
- DESP-JB9PR (crimping type)

Manufactured by Japan Aviation Electronics Industry, Limited

The connector frame is connected to the casing (metal) of the device as well as the protective ground terminal of the power inlet (conductive). Be aware that it is not isolated from the ground.

Pin	Signal name	I/O	Function	Logic
1	SCAN	IN	Scan start/advance	Edge
2	(Reserved)	IN	–	–
3	ISO_5V	–	Isolated power supply +5 V (−5 V) output	–
4	CLOSE	OUT	Channel closing complete	Pulse
5	(Reserved)	OUT	–	–
6	SCAN_RESET	IN	Resets scan operation.	Edge
7	(Reserved)	IN	–	–
8	ISO_COM	–	Isolated power supply common	–
9	(Reserved)	OUT	–	–

Signal Functions

Isolated power supply output

Pin	Signal name	EXT. I/O MODE change-over switch settings	
		NPN	PNP
3	ISO_5V	Isolated power supply +5 V	Isolated power supply −5 V output
8	ISO_COM	Isolated power supply common	Isolated power supply common

Input signal

Signal name	Description	Reference
SCAN	Starts scan operation. Moves forward to the next channel during scan operation. This signal is not valid when switching channels (until the CLOSE signal is output).	p. 41
SCAN_RESET	Resets scan operation and stops scanning. All channel relays are opened.	p. 42

Output signal

Signal name	Description	Reference
CLOSE	Outputs a pulse signal with the set pulse width when the channel relay is closed. The signal will turn off when the set pulse width time elapses or when the channel relay opens.	p. 31

Connection to the instrument

An example of connecting the device and instrument for scan measurement is shown below.
Example: Connecting the BT3562A Battery HiTester
Set the BT3562A to the external trigger mode.

SW1001 (SW1002)

Rear

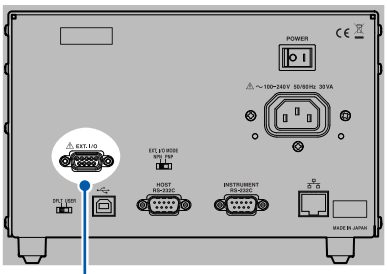

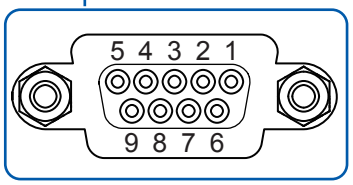

4: CLOSE — 1: TRIG
1: SCAN — 28: EOM
8: ISO_COM — 27: ISO_COM

BT3562A

Rear

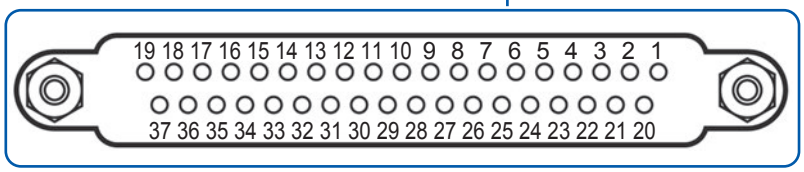

7.4 Timing Chart

The level of each signal shows the contact on/off status.
In the sourcing current (PNP) setting, HIGH and LOW in the timing chart are the same as the voltage level of the **EXT. I/O** terminal. HIGH and LOW are reversed for the voltage level in the sinking current (NPN) setting.

Channel switching operation and scan operation reset

(1) Channel switching operation

The scan input signal starts scanning and advances the scan channel.

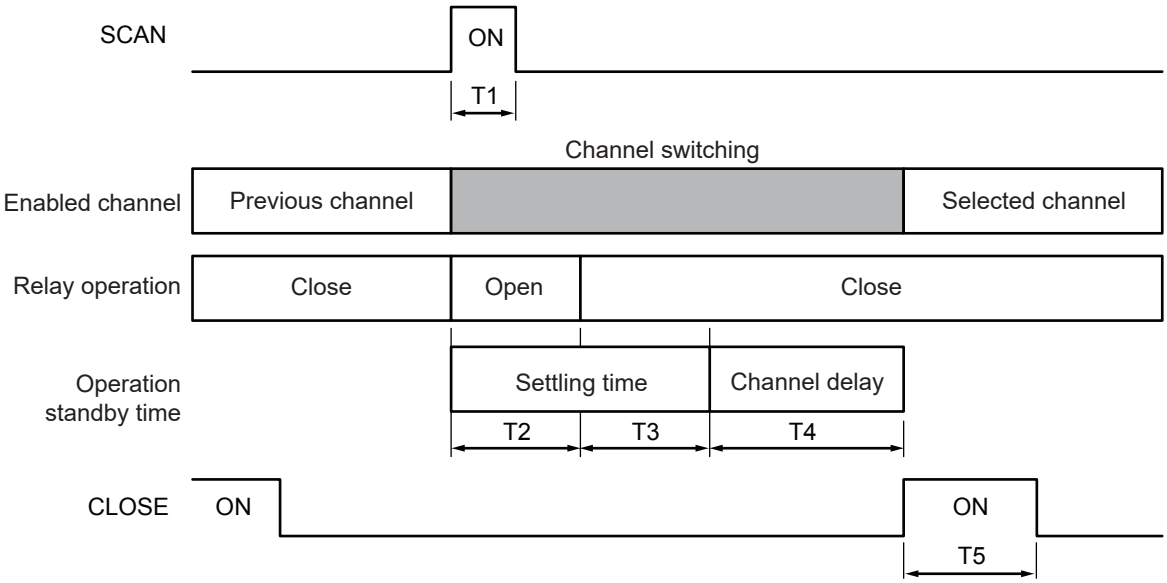

If the next channel is closed before the CLOSE signal pulse reaches the set pulse width, CLOSE signal pulse will automatically turn off.
The SCAN input signal is not valid while switching channels (until the CLOSE signal is output).

(2) Scan operation reset

When the SCAN_RESET signal is input during scan operation, the scan operation is stopped and the channel relay is opened. When the scan signal is input with the scan operation reset, the scan operation is restarted from the beginning.

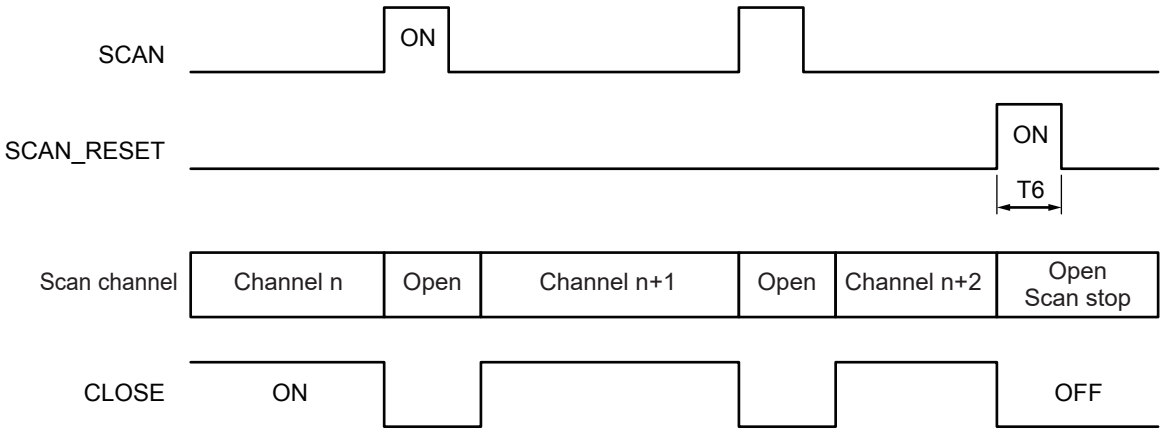

Item	Description	Time
T1	SCAN signal pulse width	1 ms or longer
T2	Relay settling time (when it is opened)	SW9001: 5 ms, SW9002: 5 ms
T3	Relay settling time (when it is closed)	SW9001: 5 ms, SW9002: 5 ms
T4	Channel delay time (user setting)	0 ms to 9999 ms (based on the setting)
T5	CLOSE signal pulse width	1 ms to 100 ms As per the `:IO:PULSe:TIME` command setting
T6	SCAN_RESET signal pulse width	1 ms or longer

7.5 Internal Circuit Configuration

NPN setting

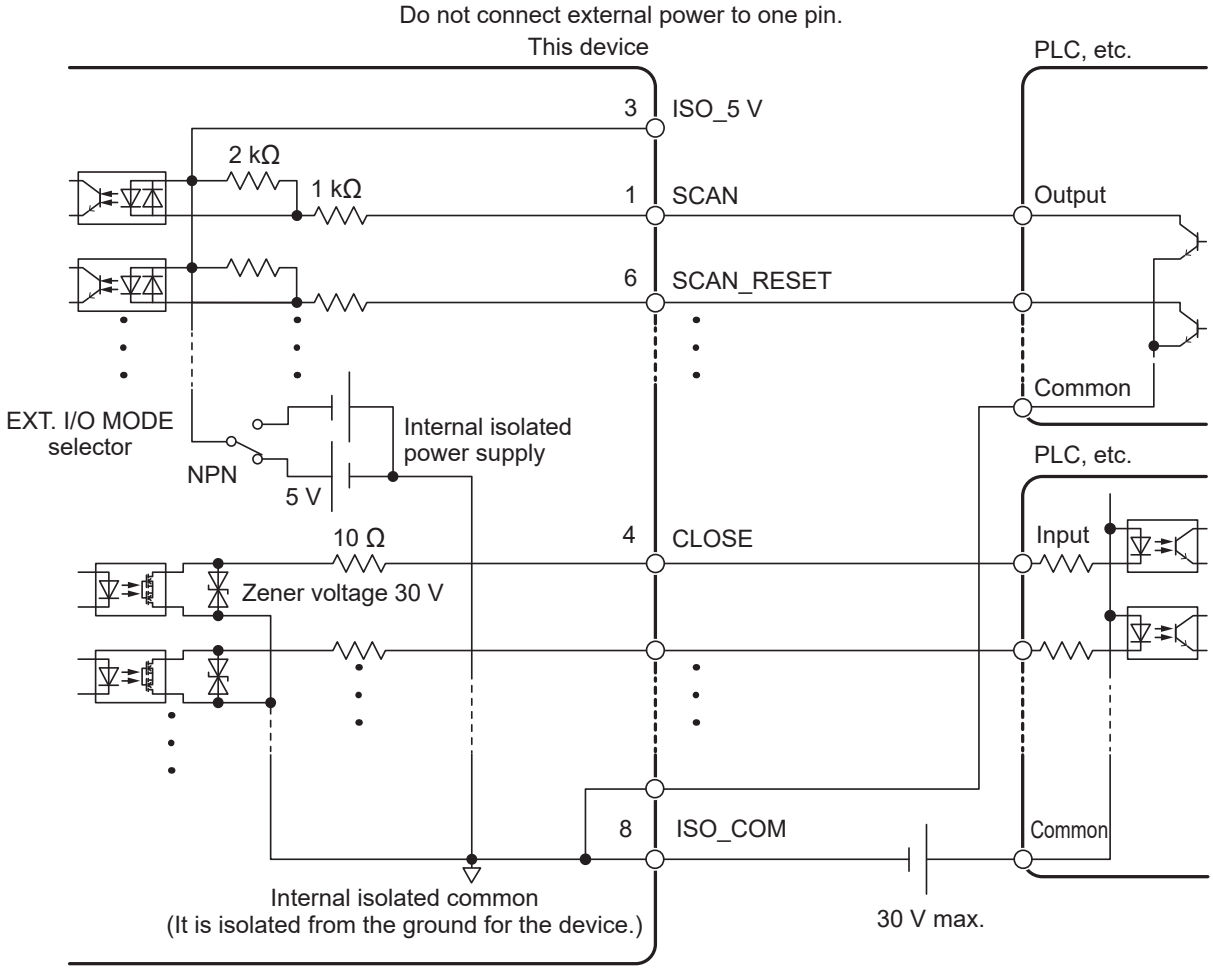

PNP setting

Use ISO_COM for the common terminal for both the input and output signals.

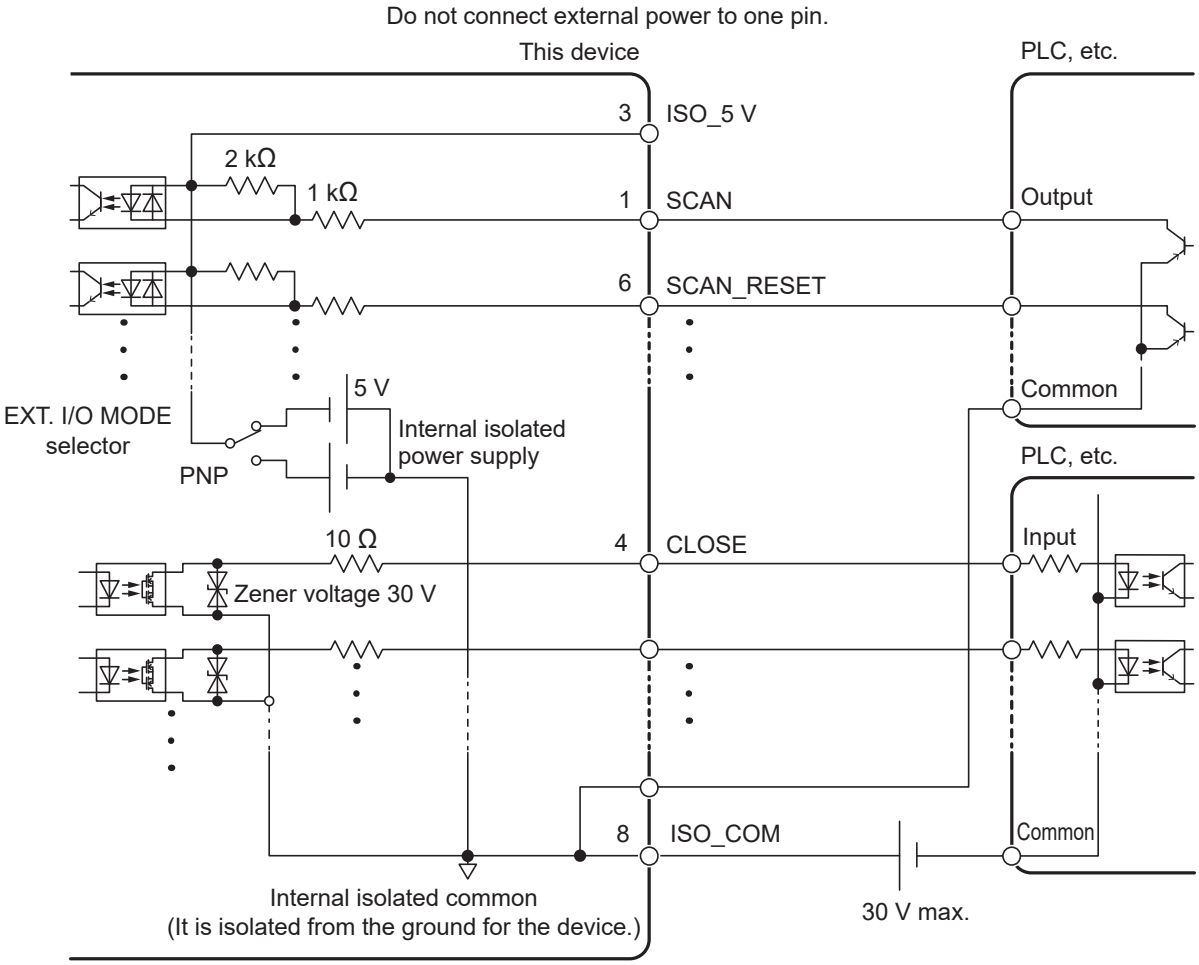

Electrical specifications

Input signal	Input format	Isolated non-voltage contact input using a photocoupler (Compatible with sinking/sourcing current output)
	Input ON	Residual voltage 1 V (input ON current 4 mA (reference value))
	Input OFF	OPEN (interrupting current 100 μA or less)
Output signal	Output format	Isolated open drain output using a photocoupler (non-polar)
	Maximum load voltage	30 V DC max.
	Maximum output current	50 mA/channel
	Residual voltage	1 V or less (load current 50 mA)/0.5 V or less (load current 10 mA)
Internal isolated power supply	Output voltage	Sinking output compatible: +4.2 V to +5.8 V Sourcing output compatible: −4.2 V to −5.8 V
	Maximum output current	100 mA
	External power supply input	None
	Insulation	Floating from the protective grounded potential and the measurement circuit
	Insulation rating	Voltage between the module and ground: 50 V DC, 30 V AC rms, 42.4 V AC peak or less

Connection examples

Input circuit connection examples

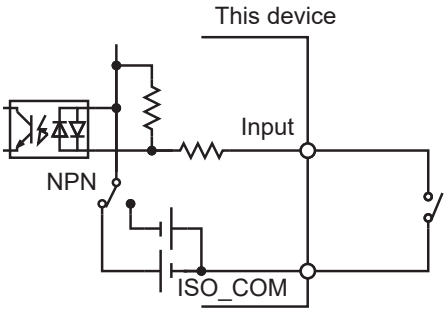

Connection to the switch

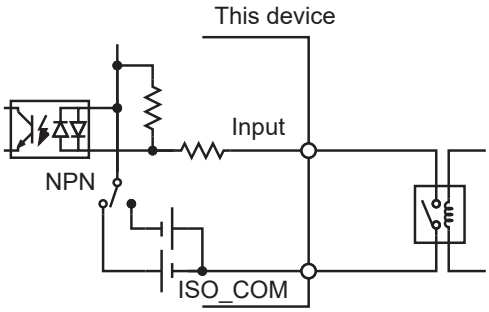

Connection to the relay

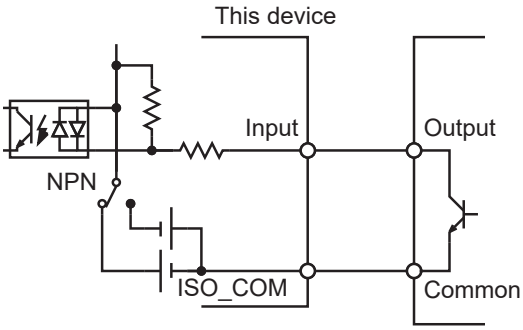

Connection to the PLC output (NPN output)

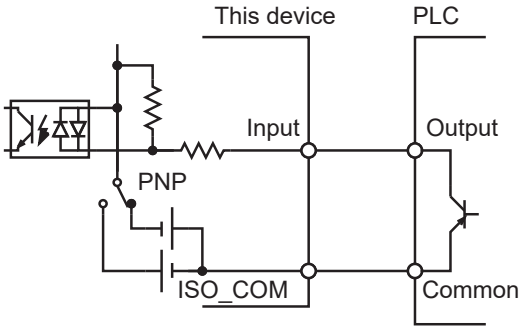

Connection to the PLC output (PNP output)

Output circuit connection examples

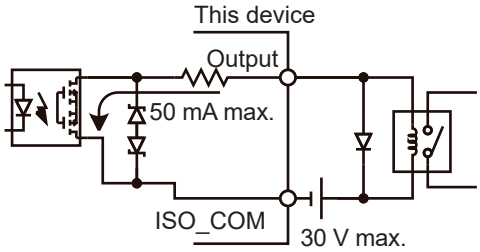

Connection to the relay

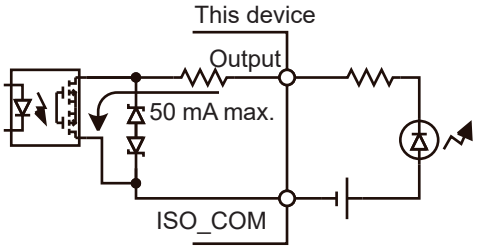

Connection to the LED

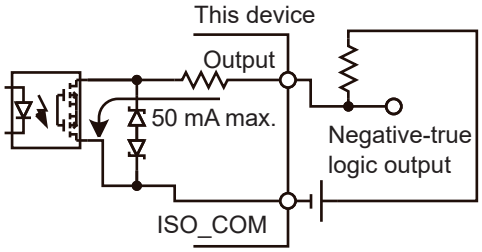

Negative-true logic output

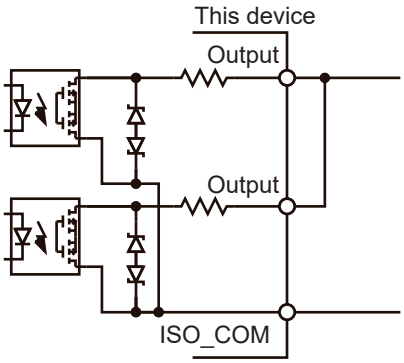

Wired-OR

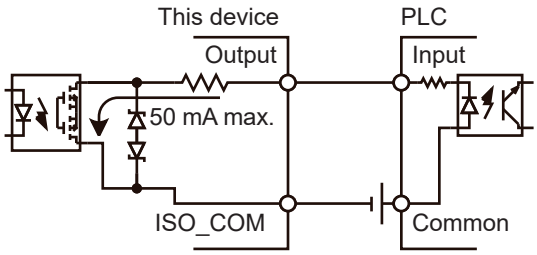

Connection to the PLC input
(plus common input)

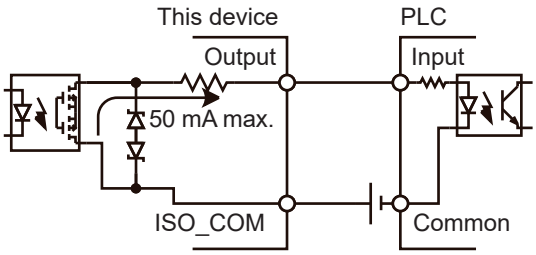

Connection to the PLC input
(minus common input)

8 Communication Function

8.1 Interface Overview and Features

The device can be controlled using the LAN interface, USB interface, or RS-232-C interface.
All of the interfaces can be used and do not need to be specified. To avoid malfunction, however, use only one interface for control.

For the specifications, see "9.4 SW1001, SW1002 Interface Specifications" (p. 123).

8.2 Setting the Communication Setting Mode

The communication setting mode needs to be specified before using the communication function. Communication settings can be specified for each interface to be used, however, the communication setting mode should be selected if the present communication settings are unknown.

Fixed setting mode (**DFLT**)	Communications are performed using the specified communication settings.
User setting mode (**USER**)	Communications are performed with the user-specified communication settings.

The device is in the fixed setting mode at the time of shipment.
Refer to "2.6 Setting the Communication Setting Mode" (p. 22) to set the communication setting mode.

Specify communication settings according to the interface to be used.
See:
"8.3 LAN Interface" (p. 60)
"8.4 USB Interface" (p. 64)
"8.5 RS-232C Interface" (p. 66)

8.3 LAN Interface

This device is equipped with an Ethernet 100BASE-TX interface as standard. The device is connected to the network using a LAN cable compatible with 10BASE-T or 100BASE-TX, and then the device can be controlled using the PC.

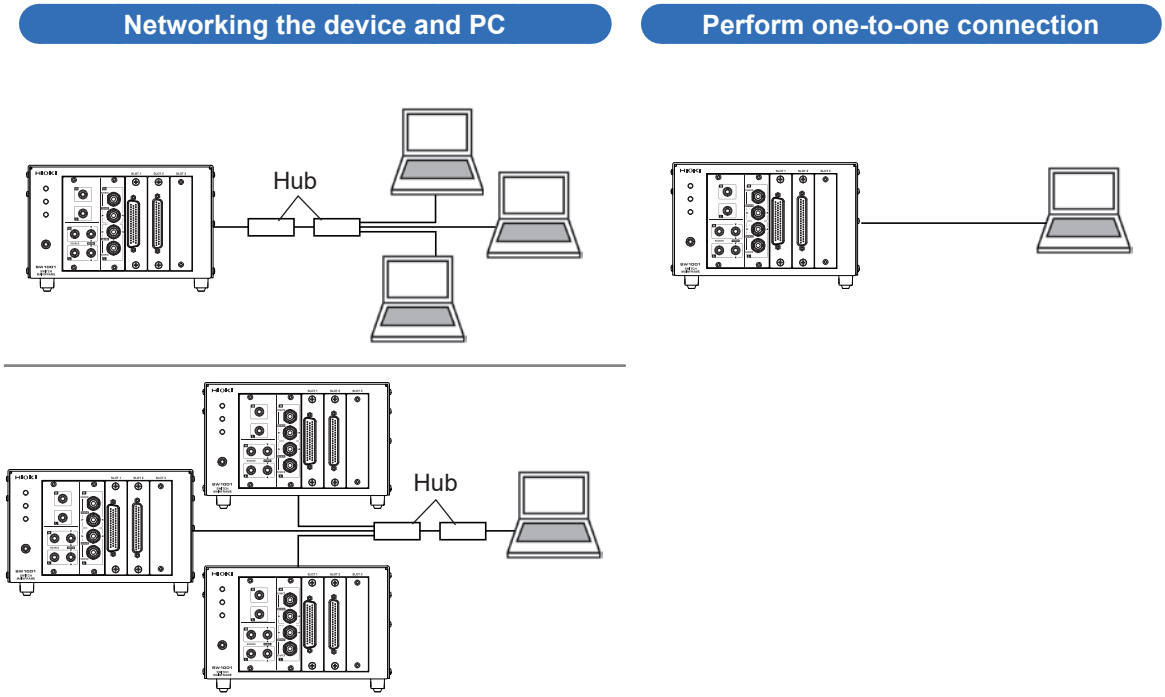

When a program is created and the device is connected to the communication command port via TCP, the device can be controlled using communication commands.

Flow of preparations

Set the communication conditions of the device (p. 61).

↓

Connect the LAN cable (p. 63).

Communication condition settings

To be checked before setting

The settings are different when the device and external device are connected to the existing network and when the device and a PC are connected to a new network.

Connecting the device to the existing network

The network administrator (department) needs to assign the following items in advance. Be sure to assign them so that they do not overlap with other devices.

• Address settings of the device	
IP address:	___.___.___.___
Subnet mask:	___.___.___.___
• Gateway	
Whether or not to use a gateway:	Use / Not use
IP address (if used):	___.___.___.___ (Set to 0.0.0.0 if not used)
• Communication command port No. to be used:	___ (Default setting: 23)

Creating a new network using the device and a PC

(Using a local network that is not connected externally)
The addresses shown below are recommended if there is no administrator or you are responsible for setting.

Setting example:

IP address	Set sequential IP addresses as shown below.
PC:	192.168.0.1
First device:	192.168.0.2
Second device:	192.168.0.3
Third device:	192.168.0.4
	↓
Subnet mask:	255.255.255.0
Gateway:	OFF
Communication command port number:	23

Setting LAN communications

Set the commands shown below for the LAN communications.

```
:SYSTem:COMMunicate:LAN:IPADdress <Value 1>,<Value 2>,<Value 3>,<Value 4>
```
Set the IP address for the device.

```
:SYSTem:COMMunicate:LAN:SMASK <Value 1>,<Value 2>,<Value 3>,<Value 4>
```
Set the LAN subnet mask.

```
:SYSTem:COMMunicate:LAN:GATeway <Value 1>,<Value 2>,<Value 3>,<Value 4>
```
Set the address for the default gateway.

```
:SYSTem:COMMunicate:LAN:CONTrol <1 - 9999>
```
Specify the communication command port No.

```
:SYSTem:COMMunicate:LAN:UPDate
```
Update and apply the LAN settings.

When the communication setting mode switch (**DFLT**/**USER**) is set to **DFLT**, the default settings are used regardless of the settings specified here.
Reference: "2.6 Setting the Communication Setting Mode" (p. 22)

Setting items

IP address	An address to identify individual instruments that are connected on the network. Be sure to set an address that does not overlap with other devices.
Subnet mask	This setting divides the IP address into the address part showing the network and the address part showing the device. Be sure to set a subnet mask that matches the subnets of other devices within the same network.
Gateway IP address	**For network connection** When the communication PC and the device are in different networks, specify the IP address of the device that becomes a gateway. If the PC is in the same network, set a gateway address that is the same as the default gateway in the general PC settings. **For one-to-one connection between the device and PC or when no gateway is used** Set the IP address to **0.0.0.0**.
Communication command port No.	Specify the TCP/IP port No. used for connecting communication commands.

Connecting the LAN cable

Thoroughly read "Before connecting the communications cables" (p. 6) beforehand.
Connect a LAN cable to the LAN connector of the device.

⚠ CAUTION

When connecting the device to your LAN using a LAN cable of more than 30 m or with the cable laid outdoors, take appropriate countermeasures that include installing a surge protector for LANs. Such signal wiring is susceptible to induced lighting, which can cause damage to the device.

Recommended cable: Model 9642 LAN cable (optional), 100BASE-TX or 10BASE-T compatible LAN cable (straight cable and cross cable can be used)

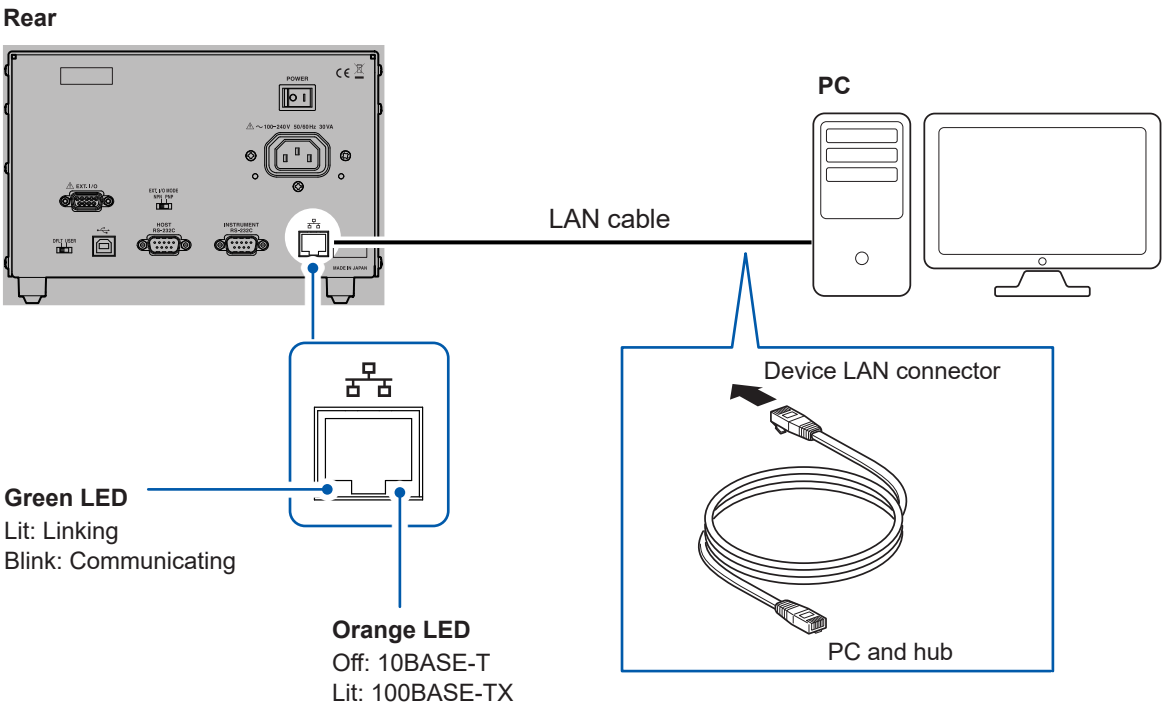

If the green LED on the LAN connector is not lit even after the device has been connected to the LAN, the device or connection device may be malfunctioning or the LAN cable may have a broken wire.

8.4 USB Interface

Installing the USB driver

When the device is connected to a PC for the first time, the dedicated USB driver is required. If the driver is already installed, the following procedure is not required. The USB driver is on the provided CD. It can also be downloaded from our website.

Installation procedure

Before connecting the device and PC using a USB cable, install the USB driver. If a USB cable is already connected to the device and PC, remove the USB cable.

1 **Log into the PC using an account with administrative privileges such as “administrator”.**

2 **Exit all applications running on the PC.**

3 **Open [X:\driver] on the provided CD and execute [HiokiUsbCdcDriver.msi] (driver installer) (X: is a CD-ROM drive).**

Follow the instructions that appear on the screen to continue the installation. Wait for a dialog box as it may take some time depending on the operation environment.

4 **Connect the device and PC using the LAN cable after the installation is completed.**

The device should now be recognized.

- If the Found New Hardware Wizard screen for new hardware is displayed, select **[No, not this time]** and then select **[Install the software automatically (Recommended)]** for checking the connection to Windows Update.
- Even when a device with a different serial No. is connected, you may receive notification of the installation of a new device. Follow the instructions on the screen and install the USB driver.
- A warning message is displayed since the Windows® logo has not been acquired. Ignore the message and continue the installation procedure.

Uninstallation procedure

Uninstall the USB driver when it is no longer required.
Click **[Control Panel]** - **[Uninstall a program]**, and then delete **[HIOKI USB CDC Driver]**.

Connecting the USB cable

Thoroughly read "Before connecting the communications cables" (p. 6) beforehand.
Recommended cable: Hioki model L1002 USB Cable (A-B)

Rear

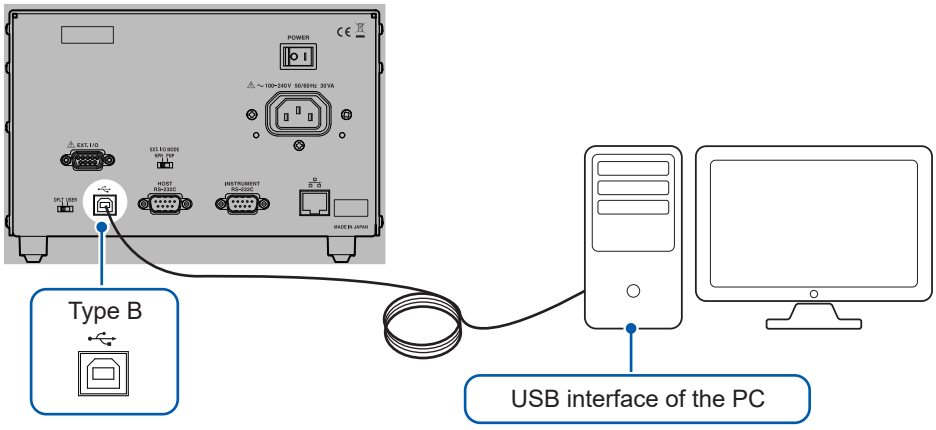

8.5 RS-232C Interface

Connecting the RS-232C cable

Thoroughly read "Before connecting the communications cables" (p. 6) beforehand.

Connect the RS-232 cable to the **HOST RS-232C** connector. Be sure to tighten the screws when connecting the cable.

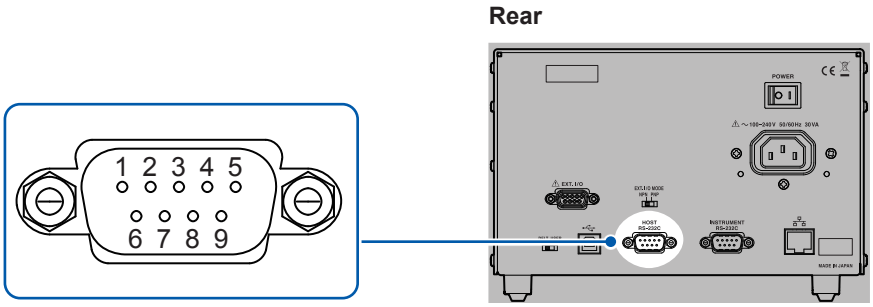

Connectors used (device unit side)

D-sub 9-pin contact
Terminal block screw #4-40

The I/O connector is DTE. The device uses pin No. 2, 3, and 5. Other pins are not used.

Pin No.	Signal name			Signal	Remarks
	Common	EIA	JIS		
1	DCD	CF	CD	Data Carrier Detect	Not connected
2	RxD	BB	RD	Receive Data	
3	TxD	BA	SD	Transmit Data	
4	DTR	CD	ER	Data Terminal Ready	ON level (+5 V to +9 V) fixed
5	GND	AB	SG	Signal Ground	
6	DSR	CC	DR	Data Set Ready	Not connected
7	RTS	CA	RS	Request to Send	ON level (+5 V to +9 V) fixed
8	CTS	CB	CS	Clear to Send	Not connected
9	RI	CE	CI	Ring Indicator	Not connected

Connecting the device and PC

Use a D-sub 9-pin female/female crossover cable.
Connect the **HOST RS-232C** connector of the device and the COM port of the PC.

Recommended cable: Hioki model 9637 RS-232C cable (9pin-9pin/1.8 m)

Cross connections

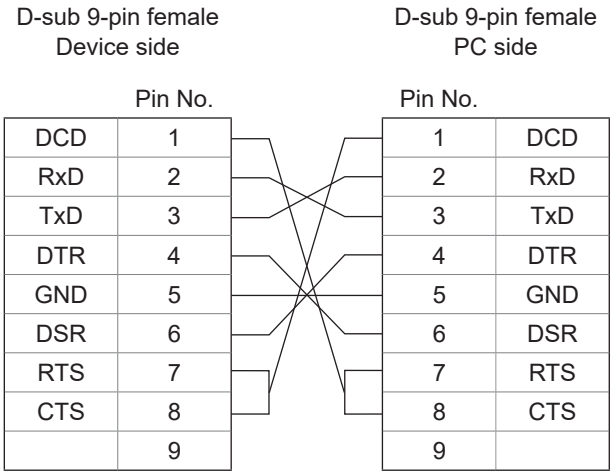

Setting RS-232C communications

Set the commands shown below for the transmission speed.

```
:SYSTem:COMMunicate:RS232C:SPEED <9600/19200/38400>
```

The speed can be selected from 9600 bps, 19200 bps, or 38400 bps.
The speed setting is immediately changed.
Other RS-232C communication parameters are fixed to 8 for data bit length, 1 for stop bit, none for parity check, and none for flow control.

When the communication setting mode switch (**DFLT**/**USER**) is set to **DFLT**, the speed setting is fixed to 9600 bps regardless of the settings specified here.
See: "2.6 Setting the Communication Setting Mode" (p. 22)

Setting the controller (PC, PLC, etc.)

Be sure to set the controller as follows.

Asynchronous (Start-stop) transmission system	
Transmission speed	9600 bps/19200 bps/38400 bps (Set the speed based on the device settings.)
Data bit length	8
Stop bit	1
Parity check	None
Flow control	None
Protocol	Non-procedure

IMPORTANT
Communications may not be established at the high transmission speed (baud rate) depending on the PC. Lower the transmission speed in that case.

8.6 Communication Command Forwarding Function

The communication command forwarding function forwards commands sent from the host to the communication interface (RS-232C) of the instrument without making any change.

- It is possible to control both the device and instrument using one communication port.
- Commands are sent to the instrument in synchronization with the completion of channel switching operation.

Data received from the instrument can also be forwarded in addition to sent data.

Number of devices to which data can be forwarded	1

Forwarding method	After the forward command "`:A`", add a transmit character string as a parameter.
	
	(use double quotation marks for the transmit character string.)
	
	Example: `*RST` is sent to the instrument.
	`:A "*RST"`
	
	Or "`:A`" can also be added to the start of the transmit character string.
	(In this case, do not insert a space after "`:A`")
	Example: `*RST` is sent to the instrument.
	`:A*RST`
	Example: `:FUNC RV` is sent to the instrument.
	`:A:FUNC RV`

Receiving method	Specify a query by adding "`?`" to the forward command's "`:A`" string.
	(use double quotation marks for the transmit character string.)
	
	Example: Send the query `:READ?` to the instrument and receive a response.
	`:A ":READ?"`
	Or "`:A`" can also be added to the start of the query character string.
	Example: Send the query `:READ?` to the instrument and receive a response.
	`:A:READ?`

Commands to the device and to the instrument can be mixed.

Example:	With CH101 selected, the query `:READ?` is sent to the instrument and the measured value is received.
	
	`CLOSE 101`
	
	`:A ":READ?"`

After the last command execution of the device is completed, command (or query) forward to the instrument is executed.

When the power is turned on, the first data received from the instrument using this function may include undefined values at the beginning (for example, undefined data accompanying the activation of the instrument's power supply).
Before receiving data for the first time, send the `:A*IDN?` query and receive the response in order to clear the device's receive buffer.
Transferring is done by row unit and buffer is approx. 128 byte of both sending and receiving.
Binary data is incompatible.

Connection method

When using the communication command forwarding function, connect the **INSTRUMENT RS-232C** connector of the device and the **RS-232C** connector of the instrument.

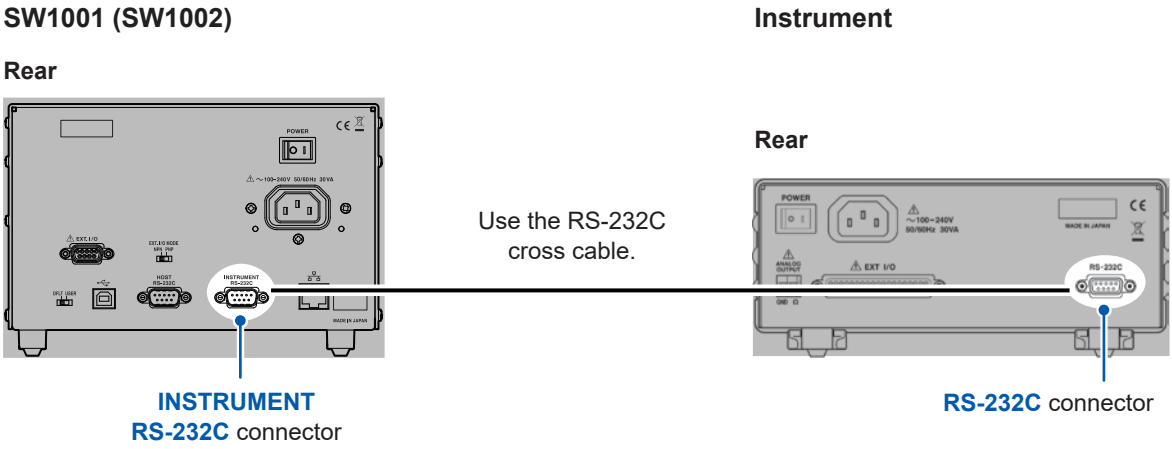

Set the communication speed of the instrument based on the communication speed setting of the device.

Setting the transmission speed

Set the commands shown below for the transmission speed of the communication command forwarding function.

```
:SYSTem:COMMunicate:FORWard:RS232C:SPEED <9600/19200/38400>
```

The speed can be selected from 9600 bps, 19200 bps, or 38400 bps.
The speed setting is immediately changed.
Other RS-232C communication parameters are fixed to 8 for data bit length, 1 for stop bit, None for parity check, and None for flow control.

See: "2.6 Setting the Communication Setting Mode" (p. 22)

Setting the receive timeout

You can set the timeout time to use when receiving data from the instrument by means of the communication command forwarding function.
Sending a query to the instrument will result in a timeout error if the set timeout time elapses before a response is received from the instrument.
Timeout can be set by the command below.

```
:SYSTem:COMMunicate:FORWard:TIMeout <Time>
```

Time: Timeout time (s)

8.7 Communication Method

Various messages are supported for controlling the device through the interfaces.
Messages can be either program messages, sent from the PC to the device, or response messages, sent from the device to the PC.

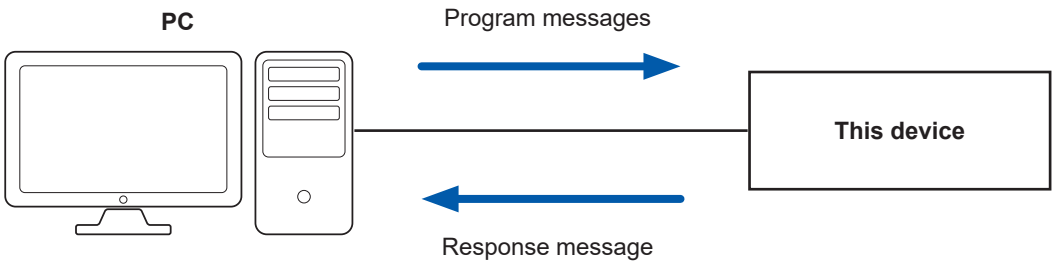

Message types are further categorized as follows.

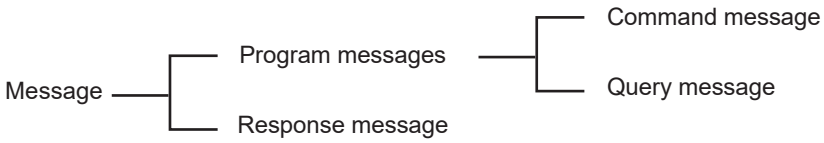

Message format

Program messages

Program messages can be either command messages or query messages.

(1) Command messages

Instructions to control the instrument, such as to change or reset the instrument settings.

Example: Instruction to close the channel 1.

```
:ROUT:CLOSE 101
```

Header portion — Space — Data format

(2) Query messages

Requests for responses relating to results of operation or measurement, or the state of device settings

Example: Request for closed channels.

```
:ROUT:CLOSE?
```

Header portion — Question mark

See: "Headers" (p. 72), "Separators" (p. 73), and "Data formats" (p. 74)

Response messages

When a query message is received, its syntax is checked and a response message is generated. If an error occurs when a query message is received, no response message is generated for that query.

Command syntax

Command names are chosen to mnemonically represent their function and can be abbreviated. The full command name is called the “long form”, and the abbreviated name is called the “short form”.
The command references in this manual indicate the short form in uppercase letters, extended to the long form in lowercase letters, although the commands are not case-sensitive in actual usage.

`:SYSTem:MODule:DELay`	Expression used in this manual
`:SYSTEM:MODULE:DELAY`	OK (long form)
`:SYST:MOD:DEL 0.01`	OK (short form)
`:SYST:MOD:DELA 0.01`	Error
`:SYST:MOD:DE 0.01`	Error

Response messages generated by the device are in long form and in uppercase letters.

Headers

Headers must always be prefixed to program messages.

(1) Command program headers

The following three types are available.

Command type	Example	Description
Headers for simple commands	`*ESE 0`	This header type is a sequence of letters and digits.
Headers for compound commands	`:SYSTem:PRESet`	These headers consist of multiple simple command type headers separated by colons (`:`).
Headers for standard commands	`*RST`	This header type begins with an asterisk (`*`), indicating that it is a standard command defined by IEEE 488.2.

(2) Query program headers

These commands are used to interrogate the instrument about the results of operations, measured values, and the present states of instrument settings. As shown by the following examples, when a query is formed by appending a question mark (`?`) after a program header, it is recognized as a query.

Example: `*STB?`

`:SYSTem:ERRor?`

Message terminators

This device recognizes the following message terminators (delimiters).

RS-232C	CR, CR+LF
LAN	CR, CR+LF

Depending on the interface settings, the following can be selected as the terminator for response messages.

RS-232C	CR+LF
LAN	CR+LF

Reference: "Communication condition settings" (p. 61)

Separators

(1) Command program headers

Multiple messages can be written in one line by separating them with semicolons (`;`).

Example: `:ROUT:CLOSE 101;*OPC?`

Semicolon

- When messages are combined in this way and if one command contains an error, all subsequent messages up to the next terminator will be ignored.
- A query error occurs if a query command is combined with an immediately following semicolon (`;`) and subsequent command.

(2) Header separator

In a message consisting of both a header and data, the header is separated from the data by a space.

Example: `:SCAN:ADD 101`

Space

(3) Data separator

In a message containing multiple data items, commas (`,`) are required to separate the data items from one another.

Example: `:SYST:MOD:WIRE:MODE 1,WIRE2`

Comma

Data formats

The device uses character data and decimal numeric data depending on the command.

(1) Character data

Character data always begins with an alphabetic character, and subsequent characters may be either alphabetic or numeric. Character data is not case-sensitive, although response messages from the device are only upper case.
Like command syntax, the data can be in long or short form and can be received in either form.

Example: `:SYSTEM:MODULE:WIRE:MODE 1,WIRE2`

(2) Decimal numeric data

Three formats are used for numeric data, identified as NR1, NR2, and NR3. Numeric values may be signed or unsigned. Unsigned numeric values are handled as positive values.
Values exceeding the precision handled by the device are rounded to the nearest valid digit.

- NR1 integer data (example: +12, −23, 34)
- NR2 fixed-point data (example: +1.23, −23.45, 3.456)
- NR3 floating-point exponential representation data (example: +1.0E-2, −2.3E+4)

The term “NRf format” includes all three of the above numeric decimal formats.
The device accepts NRf format data.

The format of response data is specified for each command, and the data is sent in that format.

Example:
```
:STAT:QUES:ENAB 106

:IO:PULSE:TIME 0.001
```

Compound command header omission

For several commands having a common header are combined to form a compound command, if they are written together in sequence, the common portion can be omitted after its initial occurrence.
This common portion is called the “current path” (analogous to the path concept in computer file storage), and until it is cleared, the interpretation of subsequent commands presumes that they share the same common portion.

This usage of the current path is shown in the following example:

Full expression `:SYSTem:MODule:WIRE:MODE 1,WIRE2;:SYSTem:MODule:WIRE:MODE 2,WIRE2`
Compacted expression `:SYSTem:MODule:WIRE:MODE 1,WIRE2;MODE 2,WIRE2` ↑ This portion becomes the current path and can be omitted from the messages immediately following.

The current path is cleared in the following circumstances.
- When the power is turned on
- Key reset
- A colon (`:`) is entered at the start of the command.
- Message terminator detection

Standard command messages can be executed regardless of the current path.
They have no effect upon the current path.

A colon (`:`) is not required at the start of the header of a simple or compound command. However, to avoid confusion with abbreviated forms and operating mistakes, Hioki recommends to always place a colon (`:`) at the start of a header.

Output queue and input buffer

Output queue

Response messages are stored in the output queue until read by the controller. The output queue is also cleared in the following circumstances.

- When the power is turned on
- Query error

At a minimum, the device's output queue can buffer a 64-byte response message.
When using the RS-232C interface, data in excess of that length may result in the output buffer being cleared due to a query error.
When using the LAN or USB interface, query operation will enter a wait state once the buffer is full and continue in that state until the data is received.

Input buffer

The input buffer can accommodate a minimum of 256 characters.
When using the RS-232C interface, data may be lost in the event of a buffer overrun.
When using the LAN or USB interface, operation will enter a wait state once the buffer becomes full and continue in that state until the buffer is empty.

Status Byte Register

This device implements the status model defined by IEEE 488.2 with regard to the serial poll function using the service request line.
The term “event” refers to any occurrence that generates a service request.

Overview of service request occurrence

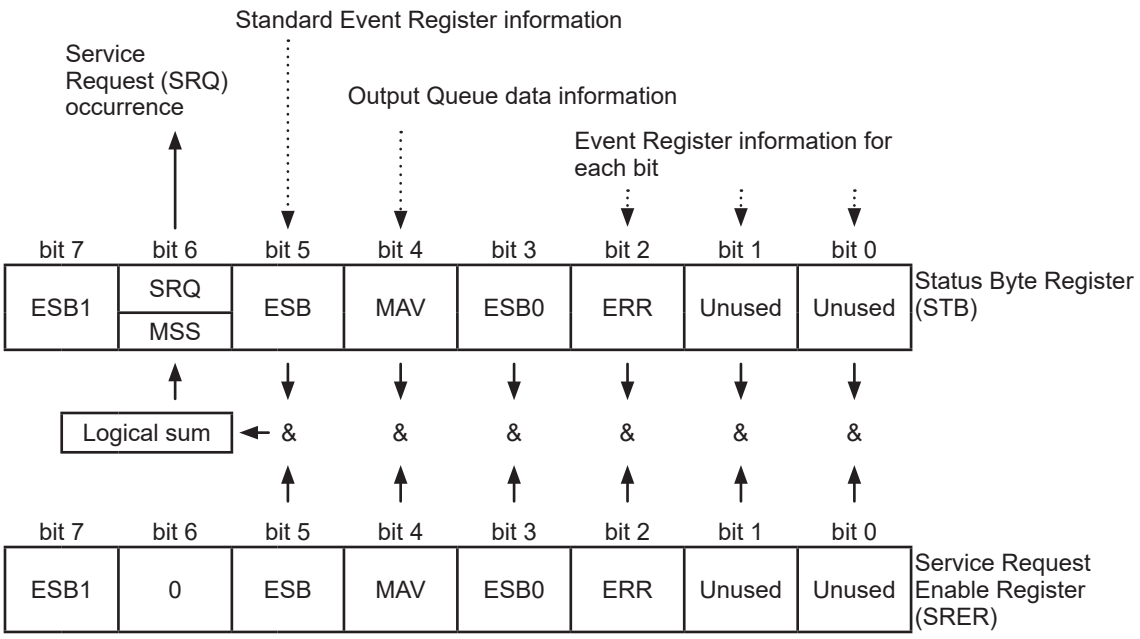

The Status Byte Register contains information about the event registers and the output queue. Required items are selected from this information by masking with the Service Request Enable Register. When any bit selected by the mask is set, bit 6 (MSS; the Master Summary Status) of the Status Byte Register is also set, which generates an SRQ (Service Request) message and dispatches a service request.

Status Byte Register (STB)

During serial polling, the contents of the 8-bit Status Byte Register are sent from the instrument to the controller.
When any Status Byte Register bit enabled by the Service Request Enable Register has switched from “0” to “1”, the MSS bit becomes “1”. Consequently, the SRQ bit is set to “1”, and a service request is dispatched.
The SRQ bit is always synchronous with service requests, and is read and simultaneously cleared during serial polling. Although the MSS bit is only read by an `*STB?` query, it is not cleared until a clear event is initiated by the `*CLS` command.

Bit 7	ESB1	Event Summary (logical sum) bit 1 This is the logical sum of the Standard Operation Register.
Bit 6	SRQ MSS	Set to “1” when a service request is dispatched. This is the logical sum of the other bits of the Status Byte Register.
Bit 5	ESB	Standard Event Summary (logical sum) bit This is logical sum of the Standard Event Status Register.
Bit 4	MAV	Message available Indicates that a message is present in the output queue.
Bit 3	ESB0	Event Summary (logical sum) bit 0 This is the logical sum of the Status Query Register.
Bit 2	ERR	Error bit Set to “1” when error information is present. Reset using `:SYSTem.ERRor?` to output error information.
Bit 1	–	Unused
Bit 0	–	Unused

Service Request Enable Register (SRER)

Setting a bit of this register to “1” enables the corresponding bit of the Status Byte Register to be used.

Event Registers

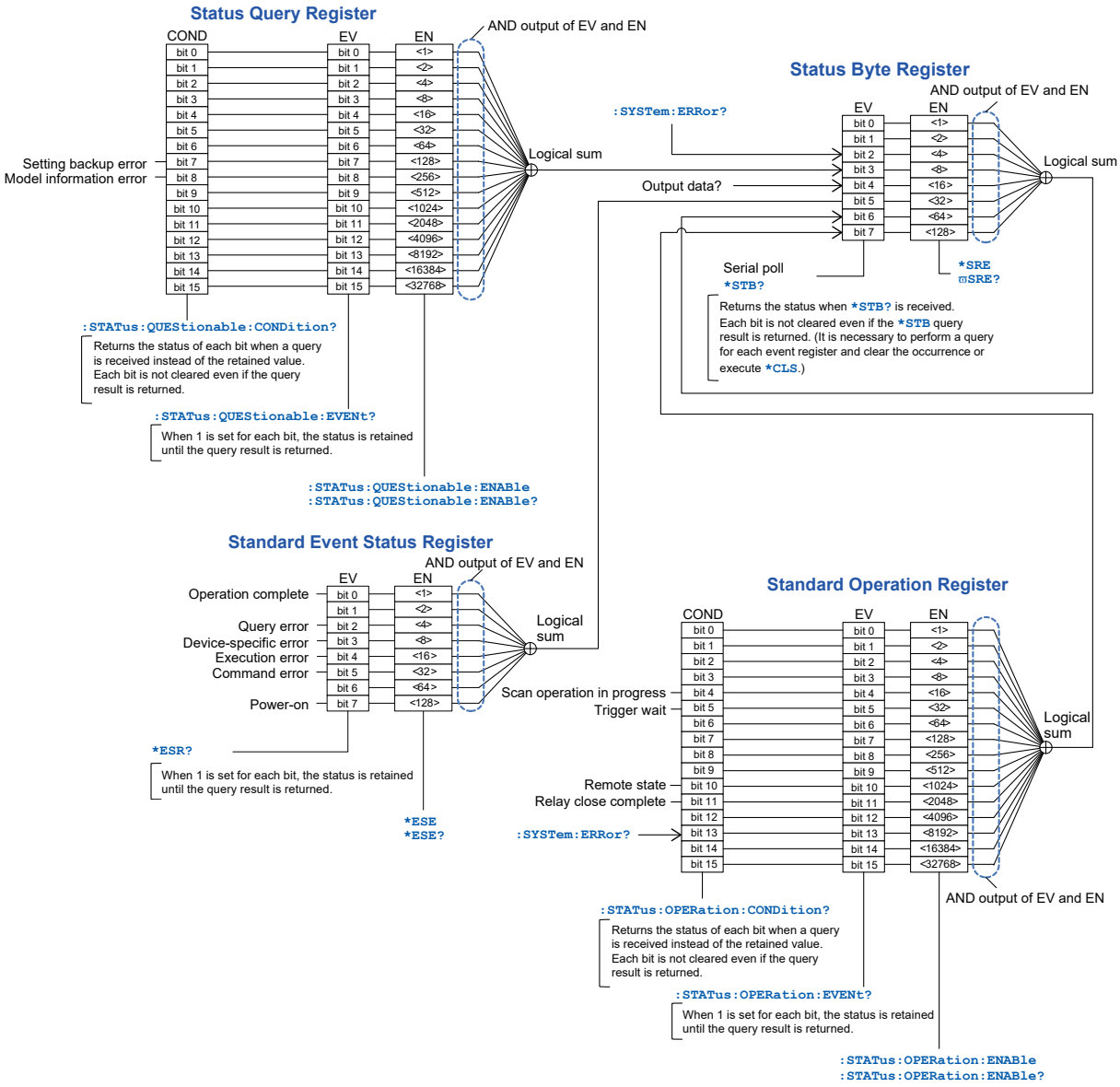

Standard Event Status Register (SESR)

The Standard Event Status Register is an 8-bit register. If any bit in the Standard Event Status Register is set to “1” (within the enabled bits set by the Standard Event Status Enable Resister), bit 5 (ESB) of the Status Byte Register is set to “1”.

See: "Standard Event Status Register (SESR) and Standard Event Status Enable Register (SESER)" (p. 81)

The Standard Event Register is cleared in the following situations:

- When a `*CLS` command is executed
- When an event register query (`*ESR?`) is executed
- When the power is turned on again

Bit 7	PON	Power-On Flag Set to “1” when the power is turned on, or upon recovery from an outage.
Bit 6	URQ (Unused)	Not used by this device User Request
Bit 5	CME	Command error (The command to the message terminator is ignored.) Set to “1” when a received command contains a syntactic or semantic error. • Program header error • Incorrect number of data parameters • Invalid parameter format • Received a command not supported by the device
Bit 4	EXE	Execution error Set to “1” when a received command cannot be executed for some reason. • The specified data value is outside of the set range • The specified setting data cannot be set • Execution is prevented by some other operation being performed
Bit 3	DDE	Device-dependent error Set to “1” in the event of a backup error, self-test error, communications parameter error, communications timeout, or other issue.
Bit 2	QYE	Query error (The output queue is cleared.) Set to “1” when a query error is detected by the output queue control. • When the data overflows the output queue • When data in the output queue has been lost
Bit 1	RQC (Unused)	Not used by this device. Request control
Bit 0	OPC	Operation complete • Execution of an `*OPC` command. • Completion of operations of all messages up to the `*OPC` command.

Standard Event Status Enable Register (SESER)

Setting any bit of the Standard Event Status Enable Register to “1” enables access to the corresponding bit of the Standard Event Status Register.

Standard Event Status Register (SESR) and Standard Event Status Enable Register (SESER)

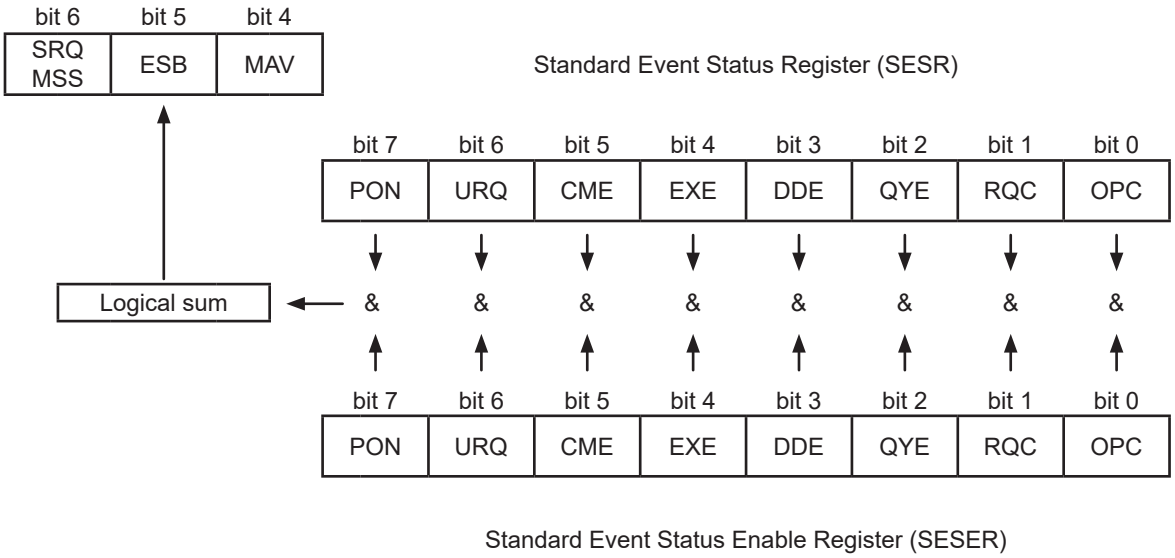

Device-specific Event Status Registers

This device provides two Event Status Registers for controlling events.
The Event Status Register is an 16-bit register.
When any bit in one of these Event Status Registers enabled by its corresponding Enable Register is set to “1”, the following happens:

- For Standard Operation Register: Bit 7 (ESB1) of the Status Byte Register is set to “1”.
- For Status Query Register: Bit 3 (ESB0) of the Status Byte Register is set to “1”.

Event Status Registers 0 and 1 are cleared in the following situations:

- When a `*CLS` command is executed
- When an Event Status Register query is executed
  (`:STATus:OPERation:EVENt?`, `:STATus:QUEStionable:EVENt?`)
- When the power is turned on again

Standard Operation Register		
Bit 15	–	Unused
Bit 14	–	Unused
Bit 13	ERR	Set to “1” when an error occurs (cleared when details are acquired from `:SYSTem.ERRor?`).
Bit 12	–	Unused
Bit 11	CLOSE	Set to “1” when channel closing is completed.
Bit 10	REMOTE	Set to “1” when the device is in the remote state.
Bit 9	–	Unused
Bit 8	–	Unused
Bit 7	–	Unused
Bit 6	–	Unused
Bit 5	WAIT_TRG	Set to “1” when the device is in the trigger waiting state.
Bit 4	SCAN	Set to “1” when scan is operating.
Bit 3	–	Unused
Bit 2	–	Unused
Bit 1	–	Unused
Bit 0	–	Unused

Event Register of the Standard Operation Register Group (`:STATus:OPERation:EVENt?`) and Enable Register of the Standard Operation Register Group (`:STATus:OPERation:ENABle`)

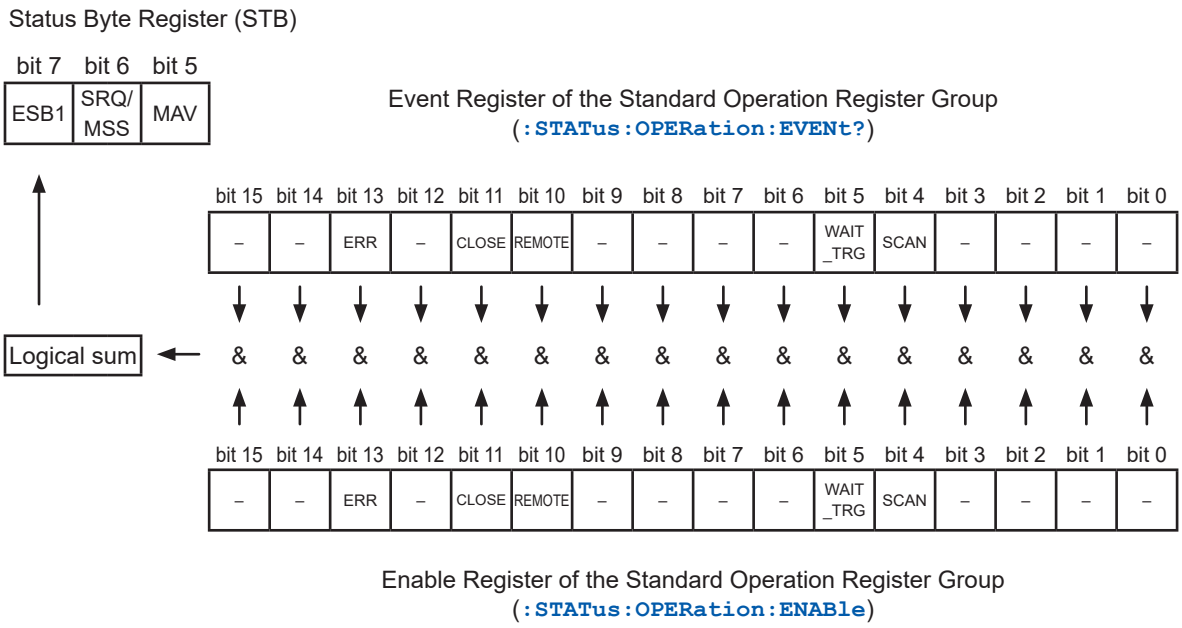

Status Query Register		
Bit 15	–	Unused
Bit 14	–	Unused
Bit 13	–	Unused
Bit 12	–	Unused
Bit 11	–	Unused
Bit 10	–	Unused
Bit 9	–	Unused
Bit 8	INFO_ERR	Model information error
Bit 7	BACKUP_ERR	Setting backup error
Bit 6	–	Unused
Bit 5	–	Unused
Bit 4	–	Unused
Bit 3	–	Unused
Bit 2	–	Unused
Bit 1	–	Unused
Bit 0	–	Unused

Event Register of the Status Query Register Group (`:STATus:QUEStionable:EVENt?`) and Enable Register of the Status Query Register Group (`:STATus:QUEStionable:ENABle`)

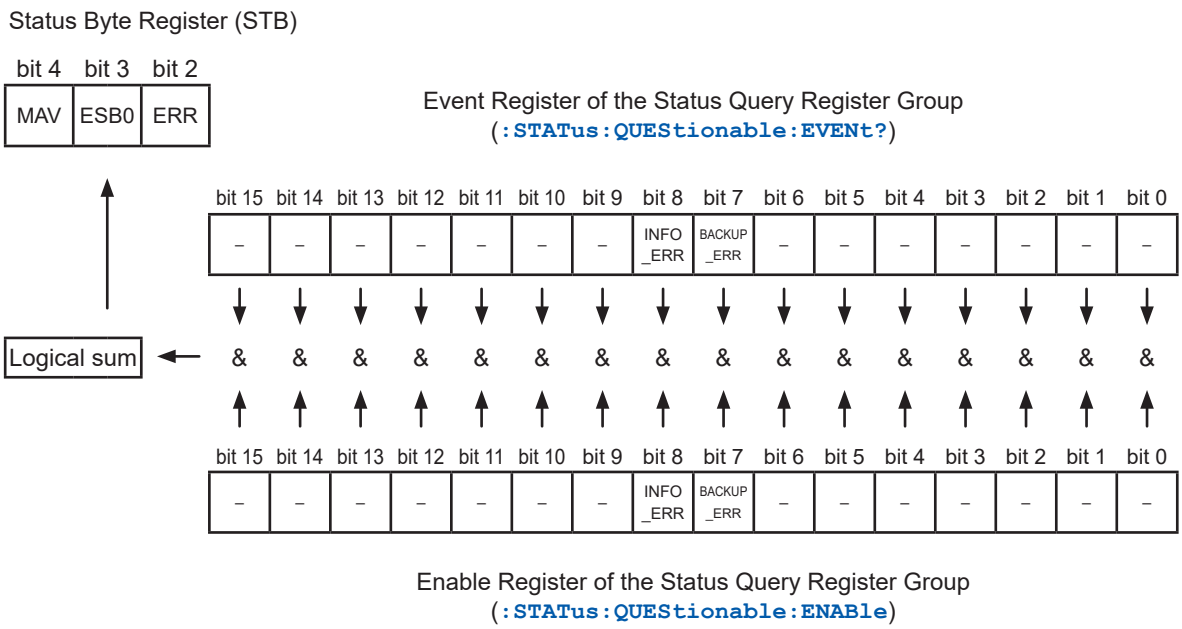

Register query and setting

Register	Query	Setting
Status Byte Register	`*STB?`	–
Service Request Enable Register	`*SRE?`	`*SRE`
Standard Event Status Register	`*ESR?`	–
Standard Event Status Enable Register	`*ESE?`	`*ESE`
Condition Register of the Standard Operation Register Group (status data)	`:STATus:OPERation :CONDition?`	–
Event Register of the Standard Operation Register Group (event data)	`:STATus:OPERation :EVENt?`	–
Enable Register of the Standard Operation Register Group	`:STATus:OPERation :ENABle?`	`:STATus:OPERation :ENABle`
Condition Register of the Status Query Register Group (status data)	`:STATus:QUEStionable :CONDition?`	–
Event Register of the Status Query Register Group (event data)	`:STATus:QUEStionable :EVENt?`	–
Enable Register of the Status Query Register Group	`:STATus:QUEStionable :ENABle?`	`:STATus:QUEStionable :ENABle`

Initialization items

✓: Yes, –: No

Register	When the power is turned on	*RST Command	*CLS Command
Device-specific functions (range, etc.)	–	✓	–
Output queue	✓	–	–
Input buffer	✓	–	–
Status Byte Register	✓	–	✓ *1
Event Register	✓ *2	–	✓
Enable Register	✓	–	–
Current path	✓	–	–

*1: All bits except the MAV bit are cleared.
*2: Except the PON bit (bit 7).

Remote state

The device enters the remote state during communications and the **REMOTE** lamp lights up.
The remote state cannot be cancelled.

8.8 Message List

Message [ ]: Omissible	Data [ ]: Omissible, ( ): Response data	Description	Reference
*IDN?	(<Manufacturer name>,<Model name>,<Serial No.>,<Software version>)	Queries the device ID (ID code).	p. 91
*RST		Initializes the device.	p. 91
*TST?	(<PASS/FAIL>)	Initiates a self-test and queries the result.	p. 91
*TRG		Trigger	p. 91
*OPC		Wait for the present operation to complete and then set OPC of SESR.	p. 92
*OPC?	(1)	Wait for the present operation to complete and then respond with ASCII “1” .	p. 92
*WAI		Wait for the present operation to complete.	p. 92
*CLS		Clears the Event Register and the Status Byte Register.	p. 92
*ESE	0 to 255	Sets the Standard Event Status Enable Register (SESER).	p. 92
*ESE?	(0 to 255)	Queries the Standard Event Status Enable Register (SESER).	
*ESR?	(0 to 255)	Queries the Standard Event Status Register (SESR).	p. 93
*SRE	0 to 255	Sets the Service Request Enable Register (SRER).	p. 93
*SRE?	(0 to 255)	Queries the Service Request Enable Register (SRER).	
*STB?	(0 to 255)	Queries the Status Byte Register.	p. 93
:STATus:OPERation:CONDition?	(0 to 65535)	Queries the Condition Register of the Standard Operation Register Group.	p. 94
:STATus:OPERation[:EVENt]?	(0 to 65535)	Queries the Event Register of the Standard Operation Register Group.	p. 94
:STATus:OPERation:ENABle	0 to 65535	Sets the Enable Register of the Standard Operation Register Group.	p. 94
:STATus:OPERation:ENABle?	(0 to 65535)	Queries the Enable Register of the Standard Operation Register Group.	
:STATus:QUEStionable:CONDition?	(0 to 65535)	Queries the Condition Register of the Status Query Register Group.	p. 95
:STATus:QUEStionable[:EVENt]?	(0 to 65535)	Queries the Event Register of the Status Query Register Group	p. 95
:STATus:QUEStionable:ENABle	0 to 65535	Sets the Enable Register of the Status Query Register Group.	p. 95
:STATus:QUEStionable:ENABle?	(0 to 65535)	Queries the Enable Register of the Status Query Register Group.	
:STATus:PRESet		Initialize the device. (Same setting as *RST)	p. 106

Message [ ]: Omissible	Data [ ]: Omissible, ( ): Response data	Description	Reference
:ABORt		Reset of the scan operation.	p. 100
:SYSTem:PRESet		Initialize the device. (Same setting as *RST)	p. 106
:SYSTem:ERRor?	(<Error No.>,<"Error message">)	Queries and clears the error information.	p. 100
:SYSTem:BACKup		Backup of the setting.	p. 105
:SYSTem:CTYPe?	<Slot No.> (<Manufacturer name>,<Model name>,<Serial No.>)	Queries the slot module information.	p. 105
:SYSTem:MODule:WIRE:MODE	<Slot No.>,<WIRE2/WIRE4/TP4>	Sets the connection method.	p. 96
:SYSTem:MODule:WIRE:MODE?	<Slot No.> (<WIRE2/WIRE4/TP4>)	Queries the connection method.	
:SYSTem:MODule:SHIeld	<Slot No.>,<OFF/GND/TERMinal1/TERMinal2/TERMinal3/T1T3>	Switches the shield.	p. 97
:SYSTem:MODule:SHIeld?	<Slot No.> (<OFF/GND/TERMinal1/TERMinal2/TERMinal3/T1T3>)	Queries the shield switching.	
:SYSTem:MODule:DELay	<Slot No.>,<Time/MIN/MAX/DEF>	Sets the channel delay time.	p. 98
:SYSTem:MODule:DELay?	<Slot No.> (<Time>)	Queries the channel delay time.	
:SYSTem:MODule:COUNt?	<Slot No.>,<Relay No.> (<Relay opening/closing frequency>)	Queries the relay opening/closing frequency.	p. 106
[:ROUTe]:CLOSe	<CH>	Selects and queries the channel.	p. 98
[:ROUTe]:CLOSe?	(<CH>)		
[:ROUTe]:OPEN		Opens all relays.	p. 98
[:ROUTe]:SCAN	<Scan list>	Scan list registration	p. 99
[:ROUTe]:SCAN?	(<Scan list>)	Queries the scan list.	
[:ROUTe]:SCAN:ADD	<Scan list>	Adds to the scan list.	p. 99
[:ROUTe]:SCAN:REMove		Deletes the scan lists.	p. 99
[:ROUTe]:SCAN:SIZE?	(<Addable count>)	Queries the number of scan lists that can be added.	p. 100
:TRIGger:SOURce	<STEP>	Sets the trigger source for scan operation.	p. 100
:TRIGger:SOURce?	(<STEP>)	Queries the trigger source for scan operation.	

Message [ ]: Omissible	Data [ ]: Omissible, ( ): Response data	Description	Reference
:IO:FILTer:STATe	<1/0/ON/OFF>	Sets the EXT. I/O input terminal filter function.	p. 102
:IO:FILTer:STATe?	(<1/0>)	Queries the EXT. I/O input terminal filter function.	
:IO:FILTer:TIME	<Filter time 0.05 to 0.50/MIN/MAX/DEF>	Sets the EXT. I/O input terminal filter time.	p. 102
:IO:FILTer:TIME?	(<Time>)	Queries the EXT. I/O input terminal filter time.	
:IO:PULSe:TIME	<Pulse time 0.001 to 0.100/MIN/MAX/DEF>	Sets the CLOSE signal pulse width.	p. 102
:IO:PULSe:TIME?	(<Time>)	Queries the CLOSE signal pulse width.	
:SYSTem:COMMunicate:LAN:CONTrol	<Port No. 1 to 65535>	Sets the communication command port No.	p. 103
:SYSTem:COMMunicate:LAN:CONTrol?	(<Port No.>)	Queries the communication command port No.	
:SYSTem:COMMunicate:LAN:GATeway	<Gateway IP address 0 - 255,0 - 255,0 - 255,0 - 255>	Sets the default gateway.	p. 103
:SYSTem:COMMunicate:LAN:GATeway?	(<Gateway address>)	Queries the default gateway.	
:SYSTem:COMMunicate:LAN:IPADdress	<IP address 0 - 255,0 - 255,0 - 255,0 - 255>	Sets the IP address.	p. 104
:SYSTem:COMMunicate:LAN:IPADdress?	(<IP address>)	Queries the IP address.	
:SYSTem:COMMunicate:LAN:SMASk	<Subnet mask 0 - 255,0 - 255,0 - 255,0 - 255>	Sets the subnet mask.	p. 104
:SYSTem:COMMunicate:LAN:SMASk?	(<Subnet mask>)	Queries the subnet mask.	
:SYSTem:COMMunicate:LAN:MAC?	(<MAC address>)	Queries the MAC address.	p. 105
:SYSTem:COMMunicate:LAN:UPDate		Apply the LAN settings.	p. 105
:SYSTem:COMMunicate:RS232C:SPEED	<9600/19200/38400>	Sets the RS-232C communication speed.	p. 103
:SYSTem:COMMunicate:RS232C:SPEED?	(<9600/19200/38400>)	Queries the RS-232C communication speed.	
:SYSTem:COMMunicate:FORWard:RS232C:SPEED	<9600/19200/38400>	Sets the RS-232C communication speed of the communication command forwarding function.	p. 101
:SYSTem:COMMunicate:FORWard:RS232C:SPEED?	(<9600/19200/38400>)	Queries the RS-232C communication speed of the communication command forwarding function.	
:SYSTem:COMMunicate:FORWard:TIMeout	<Timeout time 1 to 100>	Sets the query forward timeout.	p. 101
:SYSTem:COMMunicate:FORWard:TIMeout?	(<Timeout time 1 to 100>)	Queries the query forward timeout.	
:A	<Command character string to be forwarded>	Transfers the command or query to forward destination A.	p. 101
:TEST:RELayshort	<Slot No.>,<CH/BUS/OPEN>	Relay contact welding test	p. 106

8.9 Message Reference

1

2 **Set and query Standard Event Status Enable Register (SESER)**

3 **Syntax**	Command	`*ESE <0–255(NR1)>`
	Query	`*ESE?`
	Response	<0 to 255 (NR1)>
4 **Description**	The SESER mask is set to a numerical value from 0 to 255. The initial value when the power is turned ON is 0. When an event applicable to the specified bit occurs, bit 5, the Event Status Bit (ESB) of the Status Byte Register (STB) is set.	

bit 7	bit 6	bit 5	bit 4	bit 3	bit 2	bit 1	bit 0
PON	URQ	CME	EXE	DDE	QYE	RQC	OPC

5 **Example**	`*ESE 36` Sets bit 5 and 2 of the SESER.	

No.	Description
1	< >: Indicates the contents (character or numeric parameters) of the data portion of a message. Character parameters are returned as all capital letters. Numeric Parameters: • NRf: Number format may be any of NR1, NR2 and NR3. • NR1: Integer data (e.g.: +12, −23, 34) • NR2: Fixed-point data (e.g.: +1.23, −23.45, 3.456) • NR3: Floating-point exponential representation data (e.g.: +1.0E-2, −2.3E+4)
2	Shows the command description.
3	Shows the message syntax. Describes the command data portion or response message.
4	Describes the message.
5	Shows an example of an actual command application. The description of a command application usually refers to when the header is on (except header commands).

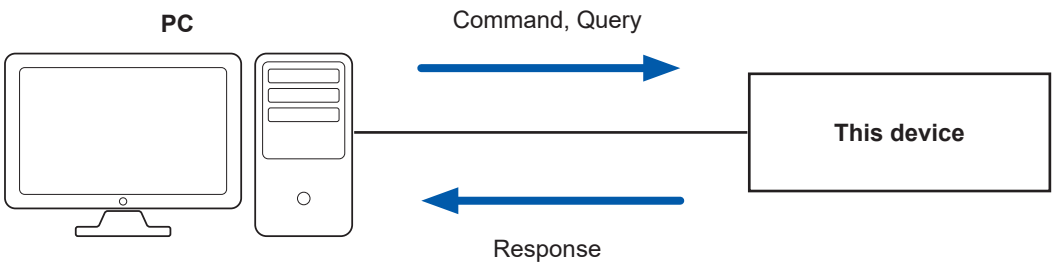

Standard commands

(1) System data command

Query device ID (ID code)		
Syntax	Query	`*IDN?`
	Response	<Manufacturer name>,<Model name>,<Serial No.>,<Software version>

Example	`*IDN?`
	`HIOKI,SW1001,123456789,V1.00`
	For the SW1002, the <Model name> is “SW1002”.	

(2) Internal operation commands

Initializes the device.		
Syntax	Command	`*RST`
Description	Resets the device to its initial state. See: "6.1 Initialization Settings" (p. 47)	
Note	• The communication conditions are not initialized. • All closed channels are opened. • Initialized settings are not preserved when the power is turned off. To save initialized settings, execute the `SYSTem:BACKup` command. See: "Backing up settings" (p. 105)	

Initiates a self-test and queries the result.		
Syntax	Query	`*TST?`
	Response	<PASS/FAIL>
Description	Performs the device self-test and returns the result. Returns PASS when no error occurs and FAIL when an error occurs.	

Example	`*TST?`
	`PASS`
	A self-test was executed and no error occurred.	

Note	An execution error occurs during scan operation.	

Trigger		
Syntax	Command	`*TRG`
Description	Starts scan operation when the scan list is enabled. During scan operation, switches to the next channel as specified by the registered scan list.	
Example	`*TRG` During scan operation, switches to the next channel as specified by the registered scan list.	

(3) Synchronized commands

Set the OPC of the SESR register when finished with all pending operations		
Syntax	Command	`*OPC`
Description	Sets “OPC bit 0” of the Standard Event Status Register (SESR) when the present operation is completed. The next command does not execute until the present operation is completed.	

Example	`*OPC`
	`*ESR?`
	`1`	

Wait for the present operation to complete and respond with 1		
	Query	`*OPC?`
	Response	1
Description	Waits for the present operation to complete and responds with 1. The next command does not execute until the present operation is completed.	

Example	`:ROUT:OPEN`
	`*OPC?`
	`1`
	Responds with 1 when all relays are opened and all commands are completed.	

Wait for the present operation to complete		
Syntax	Command	`*WAI`
Description	Waits for the present operation to complete. The next command does not execute until the present operation is completed, however, the `:ABORt` and `*TRG` commands are accepted. Unlike `*OPC`, the Standard Event Status Register (SESR) is not set. Everything else is the same.	

(4) Status and event control commands

Clear the Event Registers and the Status Byte Register		
Syntax	Command	`*CLS`
Description	Clears the Event Status Registers. The Status Byte Register bits corresponding to the Event Status Registers are also cleared. Errors are also cleared.	

Set and query Standard Event Status Enable Register (SESER)		
Syntax	Command	`*ESE <0–255(NR1)>`
	Query	`*ESE?`
	Response	<0 to 255 (NR1)>
Description	The SESER mask is set to a numerical value from 0 to 255. The initial value when the power is turned on is 0. When an event applicable to the specified bit occurs, bit 5, the Event Status Bit (ESB) of the Status Byte Register (STB) is set.	
Example	`*ESE 36` Sets bit 5 and 2 of the SESER.	

bit 7	bit 6	bit 5	bit 4	bit 3	bit 2	bit 1	bit 0
PON	URQ	CME	EXE	DDE	QYE	RQC	OPC

Query Standard Event Status Register (SESR)		
Syntax	Query	`*ESR?`
	Response	<0 to 255 (NR1)>
Description	Returns the SESR value. Unused bits (indicated in the following chart by "–") return the value 0.	

bit 7	bit 6	bit 5	bit 4	bit 3	bit 2	bit 1	bit 0
PON	–	CME	EXE	DDE	QYE	–	OPC

Example

```
*OPC
*ESR?
1
```

`*OPC` confirms that the OPC bit of the SESR has been set.

Set and query Service Request Enable Register (SRER)		
Syntax	Command	`*SRE`
	Query	`*SRE?`
	Response	<0 to 255 (NR1)>
Description	The SRER mask pattern is set to a numerical value from 0 to 255. The initial value when the power is turned on is 0. Unused bits are always returned as 0 for a query.	

128 bit 7	64 bit 6	32 bit 5	16 bit 4	8 bit 3	4 bit 2	2 bit 1	1 bit 0
ESB1	0	ESB	MAV	ESB0	ERR	–	–

Example

```
*SRE 4
```

Set so that the MSS bit of the STB is set when a system error occurs.

```
*SRE?
12
```

SRER bits 3 and 2 have been set to 1.

Query Status Byte Register		
Syntax	Query	`*STB?`
	Response	<0 to 255 (NR1)>
Description	Returns the STB value. Unused bits (indicated in the following chart by "–") return the value 0.	

bit 7	bit 6	bit 5	bit 4	bit 3	bit 2	bit 1	bit 0
ESB1	MSS	ESB	MAV	ESB0	ERR	–	–

Example

```
*STB?
4
```

STB bit 2 has been set to 1.

Device-specific commands

(1) Event Status Register

Query Condition Register of Standard Operation Register Group		
Syntax	Query	`:STATus:OPERation:CONDition?`
	Response	<0 to 65535 (NR1)>
Description	Returns the present standard operation register value. Unused bits (indicated in the following chart by "–") return the value 0.	

bit 15	bit 14	bit 13	bit 12	bit 11	bit 10	bit 9	bit 8
–	–	ERR	–	CLOSE	REMOTE	–	–

bit 7	bit 6	bit 5	bit 4	bit 3	bit 2	bit 1	bit 0
–	–	WAIT_TRG	SCAN	–	–	–	–

Example	`:STAT:OPER:COND?`
	`1024`
	The device is in the remote state.

Note	• The present status is returned when this command is received. • Unlike `:STATus:OPERation:EVENt?`, `:STATus:OPERation?`, bit information is not retained.

Query Event Register of Standard Operation Register Group		
Syntax	Query	`:STATus:OPERation[:EVENt]?`
	Response	<0 to 65535 (NR1)>
Description	Returns the retained standard operation register value. Unused bits (indicated in the following chart by "–") return the value 0.	

bit 15	bit 14	bit 13	bit 12	bit 11	bit 10	bit 9	bit 8
–	–	ERR	–	CLOSE	REMOTE	–	–

bit 7	bit 6	bit 5	bit 4	bit 3	bit 2	bit 1	bit 0
–	–	WAIT_TRG	SCAN	–	–	–	–

Example	`:STAT:OPER:EVEN?`
	`1024`
	The device is in the remote state.

Note	• When an event occurs, 1 is set for the bit corresponding to each event and retained. • The bit is not cleared until `*CLS` or this query is executed or the power is turned on again.

Set and query Enable Register of Standard Operation Register Group		
Syntax	Command	`:STATus:OPERation:ENABle <0-65535(NR1)>`
	Query	`:STATus:OPERation:ENABle?`
	Response	<0 to 65535 (NR1)>
Description	Sets the SRER mask pattern to a value from 0 to 255. The value when the device is turned on is 0. When issued as a query, unused bits are always set to 0.	

bit 15	bit 14	bit 13	bit 12	bit 11	bit 10	bit 9	bit 8
–	–	ERR	–	CLOSE	REMOTE	–	–

bit 7	bit 6	bit 5	bit 4	bit 3	bit 2	bit 1	bit 0
–	–	WAIT_TRG	SCAN	–	–	–	–

Note	The initial value when the power is turned on is 0.

Query Condition Register of Status Query Register Group		
Syntax	Query	`:STATus:QUEStionable:CONDition?`
	Response	<0 to 65535 (NR1)>
Description	Returns the present status query register value. Unused bits (indicated in the following chart by "–") return the value 0.	

bit 15	bit 14	bit 13	bit 12	bit 11	bit 10	bit 9	bit 8
–	–	–	–	–	–	–	INFO_ ERR

bit 7	bit 6	bit 5	bit 4	bit 3	bit 2	bit 1	bit 0
BACKUP _ERR	–	–	–	–	–	–	–

Example	`:STAT:QUES:COND?`
	`128`
	Backup error is occuring.

Note	• The present status is returned when this command is received. • Unlike `:STATus:QUEStionable:EVENt?`, `:STATus:QUEStionalbe?`, bit information is not retained.

Query Event Register of Status Query Register Group		
Syntax	Query	`:STATus:QUEStionable[:EVENt]?`
	Response	<0 to 65535 (NR1)>
Description	Returns the retained status query register value. Unused bits (indicated in the following chart by "–") return the value 0.	

bit 15	bit 14	bit 13	bit 12	bit 11	bit 10	bit 9	bit 8
–	–	–	–	–	–	–	INFO_ ERR

bit 7	bit 6	bit 5	bit 4	bit 3	bit 2	bit 1	bit 0
BACKUP _ERR	–	–	–	–	–	–	–

Example	`:STAT:QUES?`
	`256`
	A hardware information error has occurred.

Note	• When an event occurs, 1 is set for the bit corresponding to each event and retained. • The bit is not cleared until `*CLS` or this query is executed or the power is turned on again.

Set and query Enable Register of Status Query Register Group		
Syntax	Command	`:STATus:QUEStionable:ENABle <0–65535(NR1)>`
	Query	`:STATus:QUEStionable:ENABle?`
	Response	<0 to 65535 (NR1)>
Description	Sets the standard operation register mask pattern to a value from 0 to 65535. The value when the device is turned on is 0. When issued as a query, unused bits are always set to 0.	

bit 15	bit 14	bit 13	bit 12	bit 11	bit 10	bit 9	bit 8
–	–	–	–	–	–	–	INFO_ ERR

bit 7	bit 6	bit 5	bit 4	bit 3	bit 2	bit 1	bit 0
BACKUP _ERR	–	–	–	–	–	–	–

Note	The initial value when the power is turned on is 0.

(2) Connection method

Set and query connection method		
Syntax	Command	`:SYSTem:MODule:WIRE:MODE` <Slot No.>,<Connection method>
	Query	`:SYSTem:MODule:WIRE:MODE?` Slot No.>
	Response	<Connection method> <Slot No.> = 1 - 3 (NR1) (SW1001) 1 - 12 (NR1) (SW1002) <Connection method> = WIRE2/WIRE4/TP4 WIRE2: 2-wire WIRE4: 4-wire TP4: 4-terminal
Description	Sets the connection method for each slot. Connection method selection determines the connection terminal for the instrument to which each channel is connected. The connection method settings vary depending on the module type. When the connection method is set, all relay is opened.	

Module	Parameter that can be set	Connection method	Number of channels	Instrument example	Model	Terminal	Connection cable
SW9001	WIRE2	2-wire	22	Voltmeter	DM7276	**TERMINAL 1**	L4930
	WIRE4	4-wire	11	Battery tester	BT3562A	**TERMINAL 2**	L2108
				Resistance Meter	RM3545A		
SW9002	WIRE2	2-wire	6	Voltmeter	DM7276	**TERMINAL 1**	L4930
	TP4	4-terminal pair	6	Battery tester	BT4560	**TERMINAL 3**	L2004
				LCR meter	IM3590		

Example

`:SYST:MOD:WIRE:MODE 1,WIRE2`
Set the connection method for **SLOT 1** to 2-wire (use **TERMINAL 1** for measurement).
`:SYST:MOD:WIRE:MODE 12,TP4`
Set the connection method for **SLOT 12** to 4-terminal pair (use **TERMINAL 3** for measurement).
`:SYST:MOD:WIRE:MODE? 5`
`WIRE4`
The connection method for **SLOT 5** is 4-wire.

Note

- When the connection method is selected, the shield switching is set to the specified value. Set the shield switching as necessary.
- Specifying a slot without a module will result in an execution error.
- An execution error occurs during scan operation (command).

(3) Shield switching

Set and query the shield switching		
Syntax	Command	`:SYSTem:MODule:SHIeld` <Slot No.>,<Shield wire connection destination>
	Query	`:SYSTem:MODule:SHIeld?` Slot No.>
	Response	<Shield wire connection destination> <Slot No.> = 1 - 3 (NR1) (SW1001) 1 - 12 (NR1) (SW1002) <Shield wire connection destination> = OFF/GND/TERMinal1/TERMinal2/TERMinal3/T1T3/SNS2L OFF: Not connected GND: Connected to ground TERMinal1: **TERMINAL 1**, connect to LOW terminal TERMinal2: **TERMINAL 2**, **TERMINAL 3**, connect to source LOW terminal TERMinal3: **TERMINAL 3**, connect to sense shield terminal T1T3: **TERMINAL 1**, LOW terminal + **TERMINAL 3**, connect to sense shield terminal
Description	Sets the shield wire connection destination for each slot. The settings vary depending on the module type. When the shield switching is set, all relay is opened.	

Module	Parameter that can be set	Connection destination terminal
SW9001	Off	Not connected
	GND	GND
	TERMinal1	**TERMINAL 1**, LOW terminal
	TERMinal2	**TERMINAL 2**,**TERMINAL 3**, source LOW terminal
	TERMinal3	**TERMINAL 3**, sense shield terminal
	T1T3	TERMINAL 1, LOW terminal + TERMINAL 3, sense shield terminal
SW9002	Off	Not connected
	GND	GND
	TERMinal1	**TERMINAL 1**, LOW terminal
	TERMinal3	**TERMINAL 3**, sense shield terminal

Example

```
:SYST:MOD:SHI 1,GND
```

Connect the shield wire for **SLOT 1** to GND.

```
:SYST:MOD:WIRE:MODE? 5
OFF
```

The shield wire for **SLOT 5** is not connected.

Note

- When the connection method is selected, the shield switching is set to the specified value. Set the shield switching again as necessary.
- The [**TERMINAL 1**, LOW terminal + **TERMINAL 3**, sense shield terminal (T1T3)] shielding connection on the SW9001 should only be used when connecting a BT3562, BT3562A series (BT3562, BT3563, BT3561A, BT3562A, BT3563A) and DM7275 series (DM7275, DM7276) at the same time while the DM7275/DM7276 contact check function is not operating properly.
- Specifying a slot without a module will result in an execution error.
- An execution error occurs during scan operation (command).

(4) Selecting the channel

Select and query channel		
Syntax	Command	`[ROUTe]: CLOSe` <Slot and channel No.>
	Query	`[:ROUTe]:CLOSe?`
	Response	<Slot and channel No.> <Slot and channel No.> = Slot No. × 100 + CH No. A 3-digit number (or 4-digit number) is used to specify the channel. Example: 208 (or 0208) when specifying channel 8 for **SLOT 2**. 1112 when specifying channel 12 for **SLOT 11**.
Description	Closes the specified slot and channel. The channel that was closed previously is automatically opened. You can use the `*OPC?` query to check whether close operation has completed.	

Example	`:CLOS 0122`
	Channel 22 for **SLOT 1** is closed.
	`:CLOS?`
	`905`
	Channel 5 for **SLOT 9** is closed.	

Note	• Specifying a slot without a module will result in an execution error. • An execution error occurs during scan operation (command).	

Open all relays		
Syntax	Command	`[:ROUTe]:OPEN`
Description	Opens all channels. You can use the `*OPC?` query to check whether close operation has completed.	
Example	Command	`:OPEN`
Note	Executing this command while scan operation is in progress will cause scan operation to stop and all relays to open.	

Set and query channel delay time		
Syntax	Command	`:SYSTem:MODule:DELay` <Slot No.>,<Time/MIN/MAX/DEF>
	Query	`:SYSTem:MODule:DELay?` Slot No.>
	Response	<Time> <Slot No.> = 1 to 3 (NR1) (SW1001) 1 to 12 (NR1) (SW1002) <Time> = 0 to 9.999 (NR2) [s] (MIN:0, MAX: 9.999, DEF: 0)
Description	Sets the additional delay time after relay operation (standby for the specified settling time occurs). After the delay time elapses, channel closing is completed. The channel delay time can be specified for each slot.	

Example	`:SYSTem:MODule:DELay 1,0.01`
	Set the channel delay time for **SLOT 1** to 0.01 s.
	`:SYSTem:MODule:DELay? 3`
	`0.5`
	The channel delay time for **SLOT 3** has been set to 0.5 s.	

Note	• Specifying a slot without a module will result in an execution error. • An execution error occurs during scan operation (command).	

(5) Scan Function

Register and query scan list		
Syntax	Command	`[:ROUTe]:SCAN<(@Channel list)>`
	Query	`[:ROUTe]:SCAN?`
	Response	<(@Channel list)> Specify the channel list in the following formats. <CH>,<CH>, ..., <CH> Specify the channels to be measured individually. <CHm>:<CHn> Specify from CHm to CHn consecutively.
Description	Registers the scan function scan list (channel list to be switched). Specify the channel using the combined number of the slot number and channel number inside the module (<Slot No.> × 100 + channel number inside the module). Up to 1000 channels can be registered for the scan list. (@) can be omitted.	

Example	`:SCAN (@101,102,103,201,202)`
	Scanning is performed in order of 101, 102, 103, 201, and then 202.
	`:SCAN (@101:312)`
	Scanning is performed from 101 to 312.
	`:SCAN 1001:1222`
	Scanning is performed from 1001 to 1222.
	`:SCAN?`
	`(@101,102,103,201,202)`
	Scanning is set to be performed in order of 101, 102, 103, 201, and then 202.	

Note	An execution error occurs during scan operation (command).	

Adding to the scan list		
Syntax	Command	`[:ROUTe]:SCAN:ADD <(@Channel list)>`
	<(@Channel list)> Specify the channel list in the following formats. <CH>,<CH>,...,<CH> Specify the channels to be measured individually. <CHm>:<CHn> Specify from CHm to CHn consecutively.	
Description	Adds a list of channels to the end of the present scan list. A total of up to 1000 channels may be registered. Attempting to add 200 channels if there are presently 900 channels registered will result in an error, leaving the original scan list of 900 channels (none of the 200 channels will be added). You can check the number of channels that can be added by using the `:SCAN:SIZE?` query.	

Example	`:SCAN 101,102`
	`:SCAN:ADD 201,202`
	Scan list is 101, 102, 201, and 202.	

Note	An execution error occurs during scan operation (command).	

Delete scan list		
Syntax	Command	`[:ROUTe]:SCAN:REMove`
Description	Deletes the scan list.	
Example	`:SCAN:REM` The scan list is deleted.	
Note	An execution error occurs during scan operation (command).	

Query the number of scan lists that can be added.		
Syntax	Query	`[:ROUTe]:SCAN:SIZE?`
	Response	0 to 1000 (NR1)
Description	Checks the number of channels (remaining) that can be added to the scan list. Up to 1000 scan lists can be registered.	

Example	`:SCAN 101`
	`:SCAN:SIZE?`
	`999`
	The remaining number is 999 after one scan list is registered.	

Scan operation reset		
Syntax	Command	`:ABORt`
Description	Resets the scan operation. Channels are opened.	

Set and query scan operation trigger source		
Syntax	Command	`:TRIGger:SOURce <STEP>`
	Query	`:TRIGger:SOURce?`
	Response	<STEP> Scanning is performed with the SCAN signal of EXT. I/O or the `*TRG` command. The step is incremented with each input of the `*TRG` command or EXT. I/O SCAN signal.
Description	Sets the trigger source for scan operation.	

Example	`:TRIG:SOUR STEP`
	This setting configures scan operation in which the step is incremented with each trigger input.
	`:TRIG:SOUR?`
	`STEP`	

Note	An execution error occurs during scan operation (command).	

Query and clear error information		
Syntax	Query	`:SYSTem:ERRor?`
	Response	<Error No.>,<“Error message”> <Error No.> = Negative value error number (NR1) ><“Error message”> (use double quotation marks for the character string.)
Description	Returns and clears the error if any. Errors are in ERR bit 2 of the Status Byte Register (STB). When an error occurs, the ERR bit of the STB is set until the error is read by this command or `*CLS` is executed. When there is no error, the error No. and an empty message “ ” are returned. See: "10.2 List of Device Error Numbers" (p. 127)	
Example	`:SYST:ERR?` `-100, "Command error"`	

(6) Command forwarding function

Set and query RS-232C communication speed of the communication command forwarding function		
Syntax	Command	`:SYSTem:COMMunicate:FORWard:RS232C:SPEED <9600/19200/38400>`
	Query	`:SYSTem:COMMunicate:FORWard:RS232C:SPEED?`
	Response	<9600/19200/38400>
Description	Set the communication speed of the RS-232C (communication command forwarding function). The speed setting is immediately changed. Other RS-232C communication parameters are fixed to 8 for data bit length, 1 for stop bit, None for parity check, and None for flow control.	
Note	An execution error occurs during scan operation (command).	

Set and query forward timeout period		
Syntax	Command	`:SYSTem:COMMunicate:FORWard:TIMeout <1-100/MIN/MAX/DEF>`
	Query	`:SYSTem:COMMunicate:FORWard:TIMeout?`
	Response	<1 to 100 (NR1)> [s] (MIN: 1, MAX: 100, DEF: 10)
Description	Sets the communication timeout period for a response when a query is forwarded.	

Example	`:SYST:COMM:FORW:TIM 5`
	Set the query forward timeout period to 5 seconds.
	`:SYST:COMM:FORW:TIM?`
	`30`
	The query forward timeout period has been set to 30 seconds.	

Transfer command or query to forward destination A		
Syntax	Command	`:A <"Forward character string">`
	Response	<Response character string>
Description	Transfers the command or query to the instrument through the RS-232C port for the instrument. In case of a query, a response from the forward destination is received and returned to the PC. Or "`:A`" can also be added (without a space) to the start of the forward character string.	

Example	`:A ":FUNC RV"`
	The `:FUNC RV` command is forwarded to forward destination A.
	`:A ":READ?"`
	`289.68E-3, 1.3921E+0`
	The `:READ?` query is forwarded to forward destination A and the response is received and returned to the PC.
	Command or query forward can also be performed in the following format.
	`:A:INIT`
	`:A:READ?`	

(7) EXT. I/O settings

Set and query EXT. I/O input terminal filter function		
Syntax	Command	`:IO:FILTer:STATe <1/0/ON/OFF>`
	Query	`:IO:FILTer:STATe?`
	Response	<1/0> 1/ON The filter is activated. 0/OFF The filter is deactivated.
Description	Sets whether to activate or deactivate the filter function to prevent chattering for the SCAN of EXT. I/O and SCAN_RESET input terminal.	

Example	`:IO:FILT:STAT 1`
	The filter function is activated.
	`:IO:FILT:STAT?`
	`0`
	The filter function is deactivated.	

Note	An execution error occurs during scan operation (command).	

Set and query EXT. I/O input terminal filter time		
Syntax	Command	`:IO:FILTer:TIME <0.05–0.50/MIN/MAX/DEF>`
	Query	`:IO:FILTer:TIME?`
	Response	<0.05 to 0.50 (NR2)> [s] (MIN:0.05, MAX: 0.50, DEF: 0.05)
Description	Sets the filter time.	

Example	`:IO:FILT:TIME 0.1`
	Set the filter time to 0.1 s.
	`:IO:FILT:TIME?`
	`0.05`
	The filter time has been set to 0.05 s.	

Note	An execution error occurs during scan operation (command).	

Set and query CLOSE signal pulse width		
Syntax	Command	`:IO:PULSe:TIME <0.001–0.100/MIN/MAX/DEF>`
	Query	`:IO:PULSe:TIME?`
	Response	<0.001 to 0.100 (NR2)> [s] (MIN: 0.001, MAX: 0.100, DEF: 0.005)
Description	Sets the pulse width of the EXT. I/O CLOSE signal.	

Example	`:IO:PULS:TIME 0.001`
	Set the pulse width of the CLOSE signal to 0.001 s.
	`:IO:PULS:TIME?`
	`0.005`
	The pulse width of the CLOSE signal has been set to 0.005 s.	

Note	An execution error occurs during scan operation (command).	

(8) RS-232C settings

Set and query RS-232C communication speed		
Syntax	Command	`:SYSTem:COMMunicate:RS232C:SPEED <9600/19200/38400>`
	Query	`:SYSTem:COMMunicate:RS232C:SPEED?`
	Response	<9600/19200/38400>
Description	Sets the RS-232C communication speed. The speed setting is immediately changed. When the communication setting mode switch (**DFLT**/**USER**) is set to **DFLT**, the speed setting is fixed to 9600 bps regardless of the settings specified here. The query returns the set value regardless of the communication setting mode switch state. Other RS-232C communication parameters are fixed to data bits: 8; stop bit: 1; parity check: none; flow control: none.	
Note	An execution error occurs during scan operation (command).	

(9) LAN settings

Set and query communication command port No.		
Syntax	Command	`:SYSTem:COMMunicate:LAN:CONTrol <1-9999>`
	Query	`:SYSTem:COMMunicate:LAN:CONTrol?`
	Response	<1 to 9999 (NR1)>
Description	Specifies the TCP/IP port where communication commands are received via LAN. The setting is enabled after `:SYSTem:COMMunicate:LAN:UPDate` (or restart) is executed. When the communication setting mode switch (**DFLT**/**USER**) is set to **DFLT**, the port No. is fixed to 23 regardless of the settings specified here. The query returns the set value regardless of the communication setting mode switch state.	

Example	`SYST:COMM:LAN:CONT 23`
	`SYST:COMM:LAN:UPD`
	`SYST:COMM:LAN:CONT?`
	`23`	

Note	An execution error occurs during scan operation (command).	

Set and query default gateway		
Syntax	Command	`:SYSTem:COMMunicate:LAN:GATeway <Value 1>,<Value 2>,<Value 3>,<Value 4>`
	Query	`:SYSTem:COMMunicate:LAN:GATeway?`
	Response	<Value 1>,<Value 2>,<Value 3>,<Value 4> <Value 1> = 0 to 255 (NR1) <Value 2> = 0 to 255 (NR1) <Value 3> = 0 to 255 (NR1) <Value 4> = 0 to 255 (NR1) <Value 1> to <Value 4> indicate the address.
Description	Sets the default gateway address. The setting is enabled after `:SYSTem:COMMunicate:LAN:UPDate` (or restart) is executed. When the communication setting mode switch (**DFLT**/**USER**) is set to **DFLT**, the address is fixed to 0.0.0.0 (none) regardless of the settings specified here. The query returns the set value regardless of the communication setting mode switch state.	

Example	`SYST:COMM:LAN:GAT 192,168,0,100`
	`SYST:COMM:LAN:UPD`
	`SYST:COMM:LAN:GAT?`
	`192,168,0,100`	

Note	An execution error occurs during scan operation (command).	

Set and query IP address		
Syntax	Command	`:SYSTem:COMMunicate:LAN:IPADdress <Value 1>,<Value 2>,<Value 3>,<Value 4>`
	Query	`:SYSTem:COMMunicate:LAN:IPADdress?`
	Response	<Value 1>,<Value 2>,<Value 3>,<Value 4> <Value 1> = 0 to 255 (NR1) <Value 2> = 0 to 255 (NR1) <Value 3> = 0 to 255 (NR1) <Value 4> = 0 to 255 (NR1) <Value 1> to <Value 4> indicate the IP address.
Description	Set the IP address for the device. The setting is enabled after `:SYSTem:COMMunicate:LAN:UPDate` (or restart) is executed. When the communication setting mode switch (**DFLT**/**USER**) is set to **DFLT**, the address is fixed to 192.168.0.254 regardless of the settings specified here. The query returns the set value regardless of the communication setting mode switch state. When the LAN function is set to off, 0,0,0,0 is returned.	

Example	`SYST:COMM:LAN:IPAD 192,168,0,2`
	`SYST:COMM:LAN:UPD`
	`SYST:COMM:LAN:IPAD?`
	`192,168,0,2`	

Note	• When connecting to the existing network, specify the LAN settings via USB or RS-232C in advance. If a wrong IP address or overlapping IP address is used, a problem may arise with the existing network. • An execution error occurs during scan operation (command).	

Set and query subnet mask		
Syntax	Command	`:SYSTem:COMMunicate:LAN:SMASK <Value 1>,<Value 2>,<Value 3>,<Value 4>`
	Query	`:SYSTem:COMMunicate:LAN:SMASk?`
	Response	<Value 1>,<Value 2>,<Value 3>,<Value 4> <Value 1> = 0 to 255 (NR1) <Value 2> = 0 to 255 (NR1) <Value 3> = 0 to 255 (NR1) <Value 4> = 0 to 255 (NR1) <Value 1> to <Value 4> indicate the mask value.
Description	Set the LAN subnet mask. The setting is enabled after `:SYSTem:COMMunicate:LAN:UPDate` (or restart) is executed. When the communication setting mode switch (**DFLT**/**USER**) is set to **DFLT**, the address is fixed to 255.255.255.0 regardless of the settings specified here. The query returns the set value regardless of the communication setting mode switch state.	

Example	`SYST:COMM:LAN:SMAS 255,255,255,0`
	`SYST:COMM:LAN:UPD`
	`SYST:COMM:LAN:IPAD?`
	`255,255,255,0`	

Note	An execution error occurs during scan operation (command).	

Apply LAN settings		
Syntax	Command	`:SYSTem:COMMunicate:LAN:UPDate`
Description	Update and apply the LAN settings. When the communication setting mode switch (**DFLT**/**USER**) is set to **DFLT**, no operation is performed. Any active connection via LAN is interrupted.	

Example	`:SYST:COMM:LAN:IPAD 192,168,1,100`
	`:SYST:COMM:LAN:SMAS 255,255,255,0`
	`:SYST:COMM:LAN:GAT 0,0,0,0`
	`:SYST:COMM:LAN:CONT 23`
	`:SYST:COMM:LAN:UPD`
	For LAN-related settings, the IP address is set to 192.168.1.100, port No. 23, and gateway OFF and the settings are applied.	

Note	An execution error occurs during scan operation (command).	

Query MAC address		
Syntax	Query	`:SYSTem:COMMunicate:LAN:MAC?`
	Response	<MAC address>
Description	Returns the MAC address of the device.	
Example	`SYST:COMM:LAN:MAC?` `"00-01-67-00-00-00"`	

(10) System information

Backing up settings		
Syntax	Command	`:SYSTem:BACKup`
Description	Stores the hardware settings in the device's internal non-volatile memory. Settings will be retained even when the power is turned off.	
Note	• The non-volatile memory can be rewritten about 100,000 times. Avoid frequent use of this command. • An execution error occurs during scan operation (command).	

Query slot module information		
Syntax	Query	`:SYSTem:CTYPe?` <Slot No.>
	Response	<Manufacturer name>,<Model name>,<Serial No.> <Slot No.> = 1 to 3 (NR1) (SW1001) 1 to 12 (NR1) (SW1002) <Manufacturer name> = HIOKI 0 (Not attached) <Model name> = SW9001 (SW9001) SW9002 (SW9002) 0 (Not attached) <Serial No.> = Serial No. (NR1)
Description	Returns the module information of the specified slot.	
Example	`:SYSTem:CTYPe? 1` `HIOKI,SW9001,180612345`	

Query relay opening/closing frequency		
Syntax	Query	`:SYSTem:MODule:COUNt?` <Slot No.> [,<Relay No.>]
	Response	<Slot No.> = 1 to 3 (NR1) (SW1001) 1 to 12 (NR1) (SW1002) <Opening/closing frequency> = 0 to 1000000000 (NR1)
Description	Returns to the specified relay opening/closing frequency.	
Example	`:SYSTem:MODule:COUNt? 1` `101257`	
Note	• The relay opening/closing frequency is saved in the non-volatile memory inside each module. If no relay number is specified, the query will return the count for the relay for the selected slot that has been turned off and on the most times. (See: p. 138, p. 144) • Specifying a slot without a module will result in an execution error.	

(11) Initialization

Initialize the device		
Syntax	Command	`:SYSTem:PRESet` `:STATus:PRESet`
Description	Resets the device to its initial state. See: "6.1 Initialization Settings" (p. 47) The operation is the same for `:SYSTem:PRESet` and `:STATus:PRESet`.	
Example	`:SYST:PRES`	
Note	• The communication conditions are not initialized. • All closed channels are opened. • Initialized settings are not preserved when the power is turned off. To save initialized settings, execute the `SYSTem:BACKup` command. See: "Backing up settings" (p. 105)	

(12) Test

Relay contact welding test		
Syntax	Command	`:TEST:RELayshort` <Slot No.>,<Test item>
	<Slot No.> = 1 to 3 (NR1) (SW1001) 1 to 12 (NR1) (SW1002) <Test item> = CH/BUS/OPEN CH: Channel relay test BUS: Bus relay test OPEN: Open the relay after all test is finished.	
Description	Execute relay contact welding test to each slot. The test must be executed to both channel relay and bus relay. For details, see "Checking for relay contact welding" (p. 26)	
Example	`:TEST:RELayshort 1,CH` Execute the test to channel relay of **SLOT 1**.	

8.10 Sample Programs

This section introduces how to create programs using Visual Basic® 5.0, Visual Basic® 6.0, or Visual Basic® 2013.

Using Visual Basic® 5.0 or 6.0

These sample programs are created with Visual Basic® 5.0 and 6.0.

The following are used for communication.
For RS-232C/USB communication: Visual Basic® Professional MS Comm

During communications, the terminator setting is supposed to be as follows.
RS-232C/USB: CR+LF

RS-232C/USB communications (Using Visual Basic® Professional MS Comm)

Using the DM7276 to perform scan measurement

Connect the SW1001 and DM7276 to their respective COM ports and perform scan measurement from CH1 to CH22 for **SLOT 1**.
The USB interface can be used to communicate with the device in the same manner as the RS-232C interface. Check the COM number for the USB connection in the device properties and use that number for communications. Communications speed has no meaning in the context of a USB connection.

```
'Scan measurement sample
Private Sub ScanSample1()
Dim unit_no As Integer
Dim ch_no As Integer
Dim ch_str As String
Dim recv_str As String

MSComm1.CommPort = 3                                        'Connect the SW1001 to COM3.
MSComm1.Settings = "9600,n,8,1"
MSComm2.CommPort = 4                                        'Connect the DM7276 to COM4.
MSComm2.Settings = "9600,n,8,1"
MSComm1.PortOpen = True
MSComm2.PortOpen = True

Open App.Path & "\data.csv" For Output As #1                'Open a file for saving.

SendCommand MSComm1, ":SYST:MOD:WIRE:MODE 1,WIRE2"          'Configure SLOT1 as a 2-wire connection.
SendCommand MSComm1, "*OPC?"                                'Wait for the operation to complete.
ReceiveCOM MSComm1

For unit_no = 1 To 1
   For ch_no = 1 To 22
      ch_str = Format(unit_no, "00") & Format(ch_no, "00")  'Create a string to specify the channel.
      SendCommand MSComm1, ":CLOS " & ch_str                'Close the specified channel.
      SendCommand MSComm1, "*OPC?"                          'Wait for the closing of the channel to complete.
      ReceiveCOM MSComm1
      SendCommand MSComm2, ":READ?"                         'Send the one-time measurement command to
                                                            the DM7276.
      recv_str = ReceiveCOM(MSComm2)                        'Receive the measured value.
      Print #1, ch_str & "," & recv_str                     'Write measurement data to a file.
   Next
Next
SendCommand MSComm1, ":OPEN"                                'Open all relays after the scan completes.

Close #1
MSComm1.PortOpen = False
MSComm2.PortOpen = False
End Sub

'Send to the specified COM port.
Private Sub SendCommand(comport As MSComm, cmdstr As String)
comport.InBufferCount = 0
comport.Output = cmdstr + vbCrLf
End Sub

'Receive from the specified COM port.
Private Function ReceiveCOM(comport As MSComm) As String
Dim recvstr As String
Do While Right(recvstr, 1) <> Chr(10)
   recvstr = RecStr + comport.Input
   DoEvents
Loop
ReceiveCOM = Left(recvstr, Len(recvstr) - 2)
End Function
```

Measure the internal resistance using the BT3562A and measure the OCV using the DM7276.

Connect the SW1001 and BT3562A, DM7276 to their respective COM ports and perform scan measurement of internal resistance and OCV from CH1 to CH11 for **SLOT 1**.

```
'Scan measurement sample
Private Sub ScanSample2()
Dim unit_no As Integer
Dim ch_no As Integer
Dim ch_str As String
Dim recv_str As String
Dim ir_str(50) As String
Dim ocv_str(50) As String
Dim i As Integer

MSComm1.CommPort = 3                                        'Connect the SW1001 to COM3.
MSComm1.Settings = "9600,n,8,1"
MSComm2.CommPort = 4                                        'Connect the BT3562A to COM4.
MSComm2.Settings = "9600,n,8,1"
MSComm3.CommPort = 5                                        'Connect the DM7276 to COM5.
MSComm3.Settings = "9600,n,8,1"
MSComm1.PortOpen = True
MSComm2.PortOpen = True
MSComm3.PortOpen = True

Open App.Path & "\data.csv" For Output As #1                'Open a file for saving.

SendCommand MSComm1, ":SYST:MOD:WIRE:MODE 1,WIRE4"          'Configure SLOT1 as a 4-wire connection.
SendCommand MSComm1, "*OPC?"                                'Wait for the operation to complete.
ReceiveCOM MSComm1
SendCommand MSComm2, ":INIT:CONT OFF"                       'Turn off the continuous measurement of
                                                            BT3562A.
i = 0
For unit_no = 1 To 1
   For ch_no = 1 To 11
      ch_str = Format(unit_no, "00") & Format(ch_no, "00")  'Create a string to specify the channel.
      SendCommand MSComm1, ":CLOS " & ch_str                'Close the specified channel.
      SendCommand MSComm1, "*OPC?"                          'Wait for the closing of the channel to complete.
      ReceiveCOM MSComm1
      SendCommand MSComm2, ":READ?"                         'Send the one-time measurement command to
                                                            the BT3562A.
      ir_str(i) = ReceiveCOM(MSComm2)                       'Receive the measured value.
      i = i + 1
   Next
Next

SendCommand MSComm1, ":SYST:MOD:WIRE:MODE 1,WIRE2"          'Configure SLOT1 as a 2-wire connection.
SendCommand MSComm1, "*OPC?"                                'Wait for the operation to complete.
ReceiveCOM MSComm1
i = 0
For unit_no = 1 To 1
   For ch_no = 12 To 22                                     'The 2-wire CH12 corresponds to the 4-wire CH1
                                                            sense.
      ch_str = Format(unit_no, "00") & Format(ch_no, "00")  'Create a string to specify the channel.
      SendCommand MSComm1, ":CLOS " & ch_str                'Close the specified channel.
      SendCommand MSComm1, "*OPC?"                          'Wait for the closing of the channel to complete.
      ReceiveCOM MSComm1
      SendCommand MSComm3, ":READ?"                         'Send the one-time measurement command to
                                                            the DM7276.
      ocv_str(i) = ReceiveCOM(MSComm3)                      'Receive the measured value.
      i = i + 1
   Next
Next
SendCommand MSComm1, ":OPEN"                                'Open all relays after the scan completes.
```

```
'Write the CH1 to CH11 measurement data of SLOT 1 to a file.
i = 0
For unit_no = 1 To 1
   For ch_no = 1 To 11
      ch_str = Format(unit_no, "00") & Format(ch_no, "00")
      Print #1, ch_str & "," & ir_str(i) & "," & ocv_str(i)                    'Write measurement data to a file.
      i = i + 1
   Next
Next

Close #1
MSComm1.PortOpen = False
MSComm2.PortOpen = False
MSComm3.PortOpen = False
End Sub

'Send to the specified COM port.
Private Sub SendCommand(comport As MSComm, cmdstr As String)
comport.InBufferCount = 0
comport.Output = cmdstr + vbCrLf
End Sub

'Receive from the specified COM port.
Private Function ReceiveCOM(comport As MSComm) As String
Dim recvstr As String
Do While Right(recvstr, 1) <> Chr(10)
   recvstr = RecStr + comport.Input
   DoEvents
Loop
ReceiveCOM = Left(recvstr, Len(recvstr) - 2)
End Function
```

Using Visual Basic® 2013

This section describes how to use Visual Basic® 2013 Express Edition to operate the unit from a PC via an RS-232C or USB interface, import measured values, and save measured values to a file.

The procedure may differ slightly from the one described here depending on the environment of the PC and Visual Basic® 2013. For a detailed explanation on how to use Visual Basic® 2013, refer to the instruction manual or Help feature of Visual Basic® 2013.

(1) Creating a new project

1 **Startup Visual Basic® 2013.**

2 **Select [File] – [New Project].**

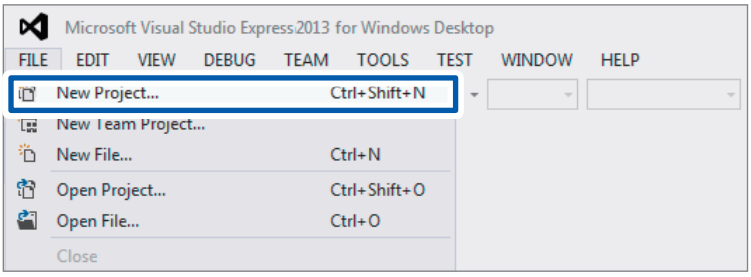

3 **Select [Windows Forms Application] from the templates.**

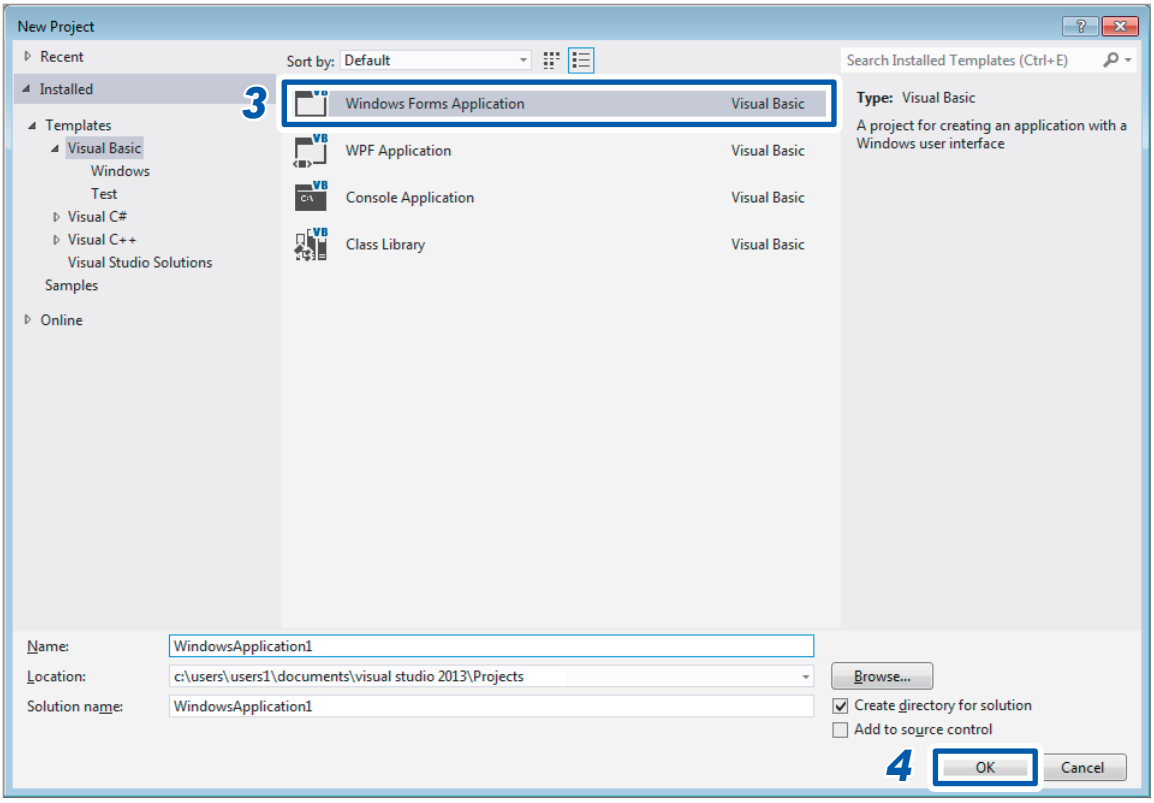

4 **Click [OK].**

(2) Placing a button

1 **Click [Button] under [Common Controls] of [Toolbox].**

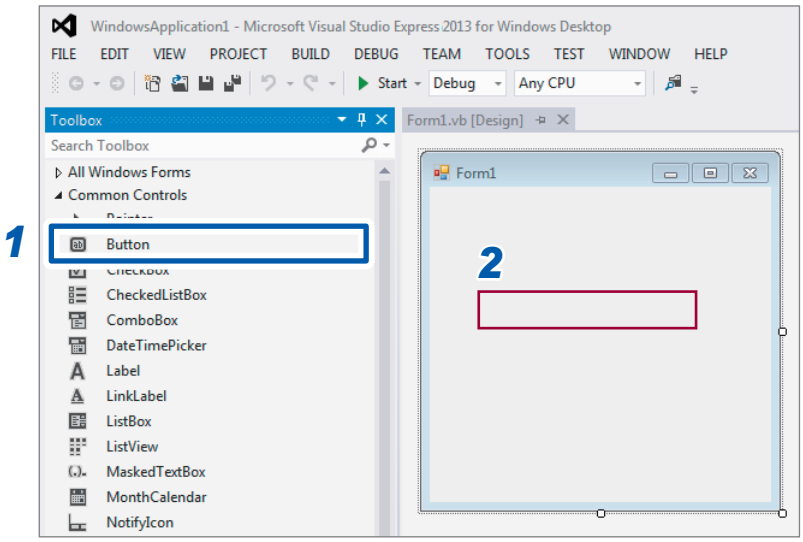

2 **Drag and drop the button onto the form layout screen.**

3 **Change [Text] to [Start Measurement] under [Properties].**

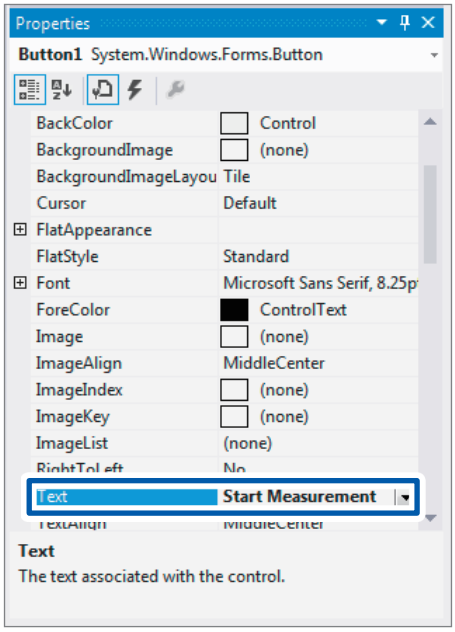

The **[Start Measurement]** button is placed on the form.

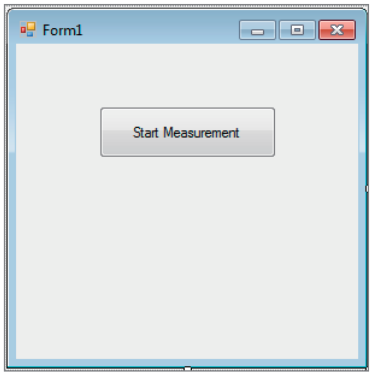

(3) Describing the code

1 **Double-click the placed button.**

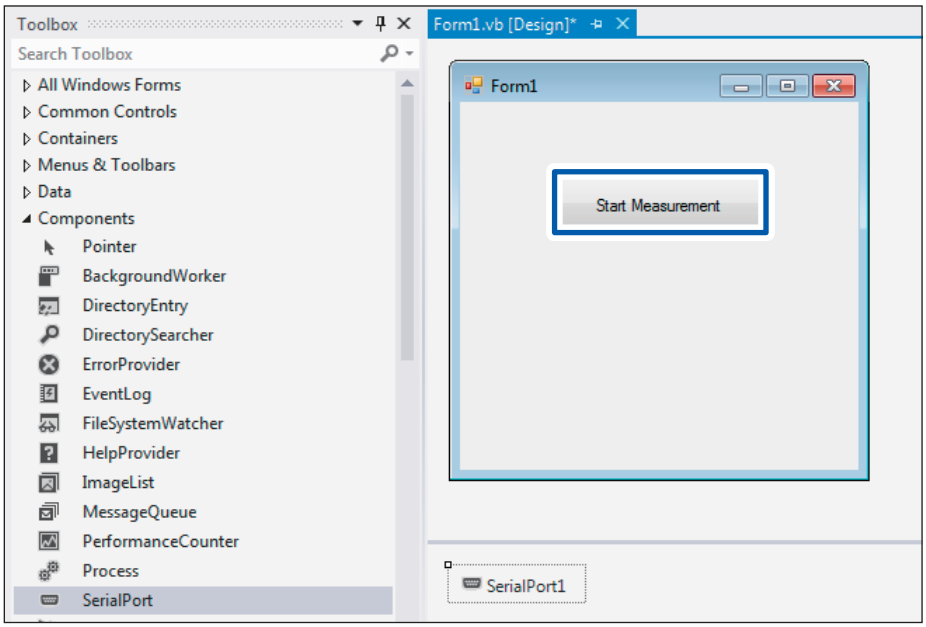

The code editor appears.

2 **Enter the sample program into the code editor.**

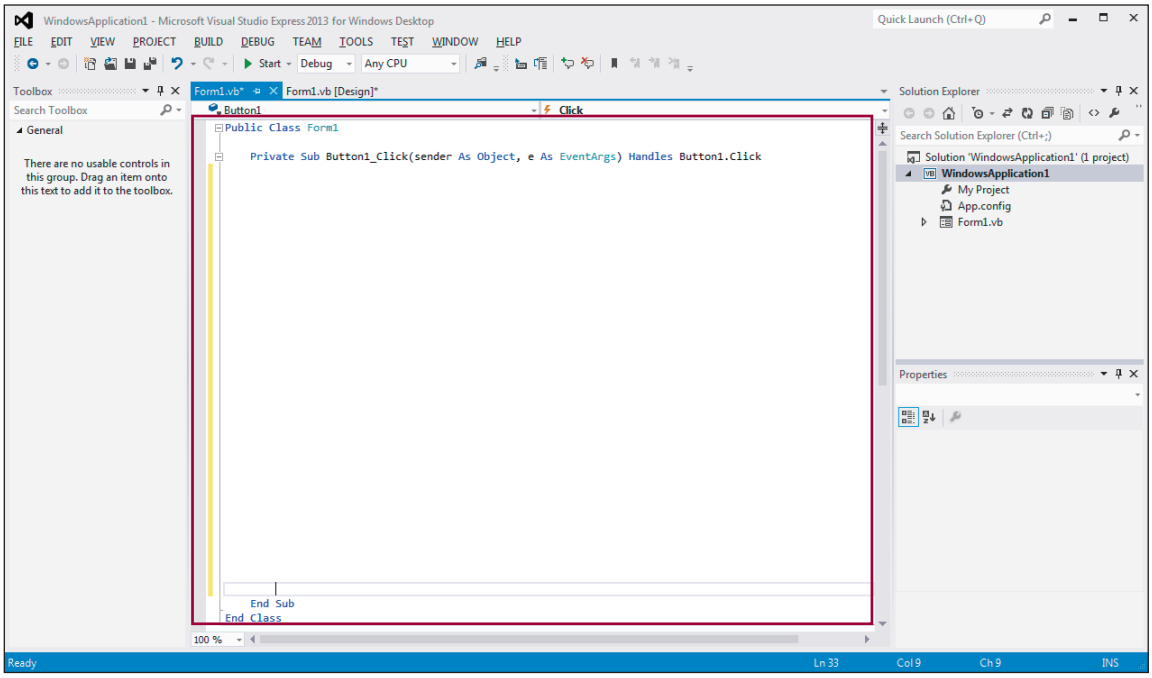

3 **Select [FILE] – [Save All].**

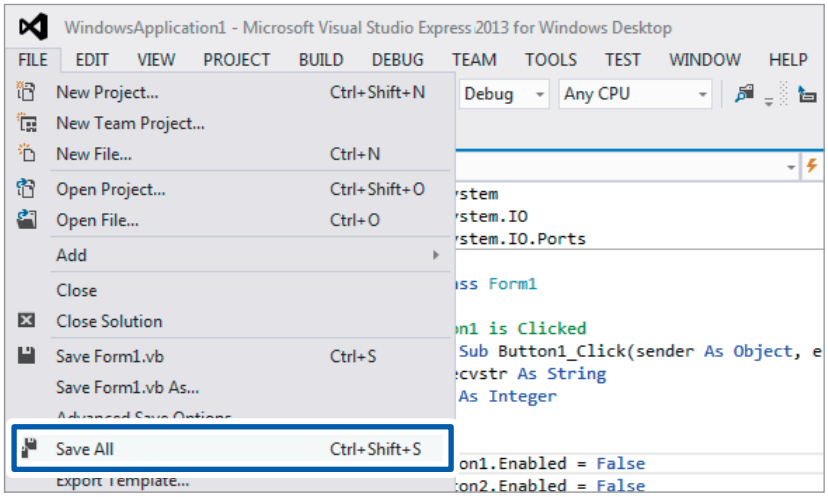

Using the DM7276 to perform scan measurement

Connect the SW1001 and DM7276 to their respective COM ports and perform scan measurement from CH1 to CH22 for **SLOT 1**.
The USB interface can be used to communicate with the device in the same manner as the RS-232C interface. Check the COM number for the USB connection in the device properties and use that number for communications. Communications speed has no meaning in the context of a USB connection.

```
Imports System.IO.Ports

'Scan measurement sample
Public Class Form1
  Private Sub Button1_Click(sender As Object, e As EventArgs) Handles Button1.Click
    Dim sp1 As SerialPort
    Dim sp2 As SerialPort
    Dim writer1 As IO.StreamWriter
    Dim unit_no As Integer
    Dim ch_no As Integer
    Dim ch_str As String
    Dim recv_str As String

    'Connect the SW1001 to COM3.
    sp1 = New System.IO.Ports.SerialPort("COM3", 9600, Parity.None, 8, StopBits.One)
    sp1.NewLine = vbCrLf : sp1.ReadTimeout = 1000

    'Connect the DM7276 to COM4.
    sp2 = New System.IO.Ports.SerialPort("COM4", 9600, Parity.None, 8, StopBits.One)
    sp2.NewLine = vbCrLf : sp2.ReadTimeout = 1000

    sp1.Open()
    sp2.Open()
    sp1.DiscardInBuffer()
    sp2.DiscardInBuffer()

    'Open a file for saving.
    writer1 = New IO.StreamWriter(Application.StartupPath + "\data.csv")

    'Configure SLOT1 as a 2-wire connection.
    sp1.WriteLine(":SYST:MOD:WIRE:MODE 1,WIRE2")
    sp1.WriteLine("*OPC?")
    sp1.ReadLine()

    For unit_no = 1 To 1
      For ch_no = 1 To 22
        'Create a string to specify the channel.
        ch_str = Format(unit_no, "00") + Format(ch_no, "00")

        'Close the specified channel and wait for the operation to complete.
        sp1.WriteLine(":CLOS " + ch_str)
        sp1.WriteLine("*OPC?")
        sp1.ReadLine()

        'Send the one-time measurement command to the DM7276 and receive the measured value.
        sp2.WriteLine(":READ?")
        recv_str = sp2.ReadLine()

        'Write measurement data to a file.
        writer1.WriteLine(ch_str + "," + recv_str)
      Next
    Next
```

```
        'Open all relays after the scan completes.
        sp1.WriteLine(":OPEN")

        writer1.Close()
        sp1.Close()
        sp2.Close()
        sp1.Dispose()
        sp2.Dispose()
    End Sub
End Class
```

Measure the internal resistance using the BT3562A and measure the OCV using the DM7276.

Connect the SW1001 and BT3562A, DM7276 to their respective COM ports and perform scan measurement of internal resistance and OCV from CH1 to CH11 for **SLOT 1**.

```
Imports System.IO.Ports

'Scan measurement sample
Public Class Form1
  Private Sub Button1_Click(sender As Object, e As EventArgs) Handles Button1.Click
    Dim sp1 As SerialPort
    Dim sp2 As SerialPort
    Dim sp3 As SerialPort
    Dim writer1 As IO.StreamWriter
    Dim unit_no As Integer
    Dim ch_no As Integer
    Dim ch_str As String
    Dim ir_str(50) As String
    Dim ocv_str(50) As String
    Dim i As Integer

    'Connect the SW1001 to COM3.
    sp1 = New System.IO.Ports.SerialPort("COM3", 9600, Parity.None, 8, StopBits.One)
    sp1.NewLine = vbCrLf : sp1.ReadTimeout = 1000

    'Connect the BT3562A to COM4.
    sp2 = New System.IO.Ports.SerialPort("COM4", 9600, Parity.None, 8, StopBits.One)
    sp2.NewLine = vbCrLf : sp2.ReadTimeout = 1000

    'Connect the DM7276 to COM5.
    sp3 = New System.IO.Ports.SerialPort("COM5", 9600, Parity.None, 8, StopBits.One)
    sp3.NewLine = vbCrLf : sp2.ReadTimeout = 1000

    sp1.Open()
    sp2.Open()
    sp3.Open()
    sp1.DiscardInBuffer()
    sp2.DiscardInBuffer()
    sp3.DiscardInBuffer()

    'Open a file for saving.
    writer1 = New IO.StreamWriter(Application.StartupPath + "\data.csv")

    'Configure SLOT1 as a 4-wire connection.
    sp1.WriteLine(":SYST:MOD:WIRE:MODE 1,WIRE4")
    sp1.WriteLine("*OPC?")
    sp1.ReadLine()

    'Turn off the continuous measurement of BT3562A.
    sp2.WriteLine(":INIT:CONT OFF")

    i = 0
    For unit_no = 1 To 1
      For ch_no = 1 To 11
        'Create a string to specify the channel.
        ch_str = Format(unit_no, "00") + Format(ch_no, "00")

        'Close the specified channel and wait for the operation to complete.
        sp1.WriteLine(":CLOS " + ch_str)
        sp1.WriteLine("*OPC?")
        sp1.ReadLine()

        'Send the one-time measurement command to the BT3562A and receive the measured value.
        sp2.WriteLine(":READ?")
        ir_str(i) = sp2.ReadLine()
        i = i + 1
      Next
    Next
```

```
        'Configure SLOT1 as a 2-wire connection.
        sp1.WriteLine(":SYST:MOD:WIRE:MODE 1,WIRE2")
        sp1.WriteLine("*OPC?")
        sp1.ReadLine()

        i = 0
        For unit_no = 1 To 1
            For ch_no = 12 To 22       'The 2-wire CH12 corresponds to the 4-wire CH1 sense.
                'Create a string to specify the channel.
                ch_str = Format(unit_no, "00") + Format(ch_no, "00")

                'Close the specified channel and wait for the operation to complete.
                sp1.WriteLine(":CLOS " + ch_str)
                sp1.WriteLine("*OPC?")
                sp1.ReadLine()

                'Send the one-time measurement command to the DM7276 and receive the measured value.
                sp3.WriteLine(":READ?")
                ocv_str(i) = sp3.ReadLine()
                i = i + 1
            Next
        Next

        'Open all relays after the scan completes.
        sp1.WriteLine(":OPEN")

        'Write the CH1 to CH11 measurement data of SLOT 1 to a file.
        i = 0
        For unit_no = 1 To 1
            For ch_no = 1 To 11
                ch_str = Format(unit_no, "00") + Format(ch_no, "00")
                writer1.WriteLine(ch_str + "," + ir_str(i) + "," + ocv_str(i))
                i = i + 1
            Next
        Next

        writer1.Close()
        sp1.Close()
        sp2.Close()
        sp3.Close()
        sp1.Dispose()
        sp2.Dispose()
        sp3.Dispose()
    End Sub
End Class
```

9 Specifications

9.1 SW1001, SW1002 General Specifications

Operating environment	Indoor, pollution level 2, altitude up to 2000 m (6562 ft.)	
Operating temperature and humidity	Temperature Humidity	0°C to 40°C (32°F to 104°F) 80% RH or less (no condensation)
Storage temperature and humidity	Temperature Humidity	−10°C to 50°C (14°F to 122°F) Less than 40°C (104°F), 80% RH or less (no condensation) 40°C (104°F) or higher and less than 45°C (113°F), 60% RH or less (no condensation) 45°C to 50°C (113°F to 122°F), 50% RH or less (no condensation)
Standards	Safety EMC	EN61010 EN61326 Class A
Power supply	Commercial power supply Rated supply voltage: Rated supply frequency: Anticipated transient overvoltage: Maximum rated power:	 100 V to 240 V AC (Voltage fluctuations of ±10% from the rated supply voltage are taken into account.) 50 Hz/60 Hz 2500 V 30 VA
Display	Power LED, error LED, and remote LED	
Interface	USB, LAN, RS-232C (2 ports), EXT. I/O	
Dimensions	SW1001: Approx. 215W × 132H × 420D mm (8.46"W × 5.20"H × 16.54"D) (excluding protrusion) SW1002: Approx. 430W × 132H × 420D mm (16.93"W × 5.20"H × 16.54"D) (excluding protrusion)	
Mass (No module attached)	SW1001: Approx. 3.7 kg (130.5 oz.) SW1002: Approx. 6.0 kg (211.6 oz.)	
Warranty period	3 years Connector, cable, etc.: Not covered by the warranty	
Accessories	See: "Main unit and accessories" (p. 2)	
Options	See: "Options" (p. 2)	

9.2 SW1001, SW1002 Input Specifications/Output Specifications/Measurement Specifications

Basic specifications

Number of slots	3 slots (SW1001), 12 slots (SW1002)	
Analog bus	Number of systems	2-wire 4-system (automatic selection based on the module and connection method)
	Terminal	BNC receptacle × 4 (4-terminal pair) Banana terminal receptacle × 4 (4-wire) Banana terminal receptacle × 2 (2-wire)
Maximum input voltage	60 V DC, 30 V AC rms, 42.4 V peak	
Maximum rated voltage to earth	60 V DC (Anticipated transient overvoltage: 60 V)	
Compatible module	Model SW9001 Multiplexer Module Model SW9002 Multiplexer Module	
Number of instruments to be connected	Maximum 2 One 2-wire + one 4-wire or one 2-wire + one 4-terminal pair	

9.3 SW1001, SW1002 Functional Specifications

Channel switching	The specified slot and channel is connected to the analog bus based on the communication command.		
Connection method	2-wire	Connect to **TERMINAL 1**	
	4-wire	Connect to **TERMINAL 2**	
	4-terminal pair	Connect to **TERMINAL 3**	
	Connect to **TERMINAL 2** and **TERMINAL 3** in parallel inside.		
	Default setting	SW9001: 2-wire SW9002: 4-terminal pair	
Channel delay	The delay time allowed to elapse from channel relay close operation to outputting of the EXT. I/O CLOSE signal can be set.		
	Delay time	0.000 s to 9.999 s	
	Default setting	Delay time: 0.000 s	
Shield switching	The shield wire connection point can be set for each slot. However, it is reconfigured to the default with each cycle, according to the connection method when the connection method is changed.		

Connection destination	Default according to the connection method
Not connected	–
TERMINAL 1 LOW terminal	2-wire
TERMINAL 2 source LOW terminal (only for model SW9001)	–
TERMINAL 3 sense shield terminal	4-terminal pair
GND	4-wire
TERMINAL 1 LOW terminal + **TERMINAL 3** sense shield terminal (only for model SW9001)	–

Scan function	Operation	Switch the channel according to the created scan list. Scan operation is triggered by the EXT. I/O SCAN signal or `*TRG` command input.	
	Scan operation Trigger source	STEP	Switches channels in the order specified by the scan list at each signal input. EXT. I/O can be used to synchronize channel switching and trigger measurement with one measuring instrument.
	Scan list	Registers scan channels. Maximum number of steps: 1000	
	Default setting	Scan operation trigger source: STEP Scan list: none	
Communication command forward	Communication data can be forwarded (sent/received) between the host (PC, PLC) and the instrument connected to the **INSTRUMENT RS-232C** connector of the device. (Communications with the instrument can be performed using the communication port.)		
Setting backup	Backs up communication settings and scan lists in the non-volatile memory.		

Communication setting change-over function	Changes to the “Fixed setting mode/User setting mode” in the communication settings when the slide switch is toggled.	
	Fixed setting mode (**DFLT**)	Communications can be performed via all LAN, USB, and RS-232C interfaces. The LAN interface is set to the fixed setting mode. The USB interface and RS-232C interface are set to the default setting.
	User setting mode (**USER**)	Sets the communications interface using a command and performs communications according to the settings.

9.4 SW1001, SW1002 Interface Specifications

LAN

Applicable standard	IEEE802.3	
Transmission method	10BASE-T/100BASE-TX automatic recognition Full duplex	
Protocol	TCP/IP	
Connector	RJ-45	
Communication description	Setting and measured value acquisition by using communications commands	
Settings	IP address, subnet mask, default gateway Communication command port number: 1 to 9999	
Default setting	IP address:	192.168.0.254
	Subnet mask:	255.255.255.0
	Default gateway:	0.0.0.0 (None)
	Communication command port number:	23
Fixed setting mode	IP address:	192.168.0.254
	Subnet mask:	255.255.255.0
	Default gateway:	0.0.0.0 (None)
	Communication command port number:	23
Delimiter	Sending CR+LF, receiving CR or CR+LF	

USB

Electrical specifications	USB2.0(Full–Speed)
Connector	Series B receptacle
Class	CDC class (USB COM)
Delimiter	Sending CR+LF, receiving CR or CR+LF

RS-232C

Number of ports	2 (host side, instrument side)
Connector	D-sub 9-pin, male, fixing stud screw #4-40 UNC
Transmission method	Start-stop system, full duplex
Transmission speed	9600 bps/19200 bps/38400 bps
Data bit length	8
Stop bit:	1
Parity check	None
Delimiter	Sending CR+LF, receiving CR or CR+LF

Flow control	None
Protocol	Non-procedure
Communication description	Setting and measured value acquisition by using communications commands
Default setting	Transmission speed: 9600 bps

EXT. I/O

Connector	D-sub 9-pin, female, fixing stud screw #4-40 UNC	
Input		
Electrical specifications	Insulation	Photocoupler isolated non-voltage contact input (Compatible with sinking/sourcing current output)
	Input ON	Residual voltage: 1 V or less Input ON current: 4 mA (reference value)
	Input OFF	OPEN (interrupting current 100 μA or less)
	Response time	ON edge: Maximum 0.1 ms, OFF edge: Maximum 1.0 ms
Input signal	SCAN, SCAN_RESET	
Output		
Electrical specifications	Insulation	Photocoupler isolated open drain output (non-polar)
	Maximum load voltage	30 V DC
	Residual voltage	1 V or less (load current 50 mA), 0.5 V or less (load current 10 mA)
	Maximum output current	50 mA/channel
Output signal	CLOSE	
Power supply output		
Output voltage	Sinking output compatible	+4.2 V to +5.8 V
	Sourcing output compatible	−4.2 V to −5.8 V
Maximum output current	100 mA	
External power supply input	None	
Insulation	Floating from the protective grounded potential and the measurement circuit Voltage to ground: 50 V DC, 30 V AC rms, 42.4 V AC peak or less	

10 Maintenance and Service

10.1 Troubleshooting

If damage is suspected, check “Before sending the device for repair” before contacting your authorized Hioki distributor or reseller.

Before sending the device for repair

Symptom	Check item or cause	Solution	Reference
No input to the instrument.	The power is not turned on.	Check the power cord and turn on the power switch.	p. 23
	The measurement cable for the measuring object is disconnected.	Connect the measurement cable to each module. Check that the measurement cable is connected to the measuring object.	p. 18
	The connection cable for the instrument is disconnected.	Check the connection cable between the device and instrument.	p. 19
	The module connection method is set incorrectly.	Check the terminal to be connected to the instrument and select the correct connection method.	p. 19 p. 28
	Communications or control cannot be performed (the **REMOTE** lamp is not lit).	Check that the communication cable is connected. Check the LAN settings. Disconnect the USB cable and connect it to the PC again. Use the RS-232C cross cable.	p. 22 p. 61 p. 65 p. 66
The channel cannot be switched.	The module connection method is set incorrectly.	Check the terminal to be connected to the instrument and select the correct connection method.	p. 28
Scanning cannot be performed.	The scan list is not specified.	Specify and set the scan list.	p. 40
	The EXT. I/O connection is incorrect.	Check the EXT. I/O connection.	p. 51

Error display and troubleshooting

If the **ERROR** lamp is lit at the time of startup, it is necessary to repair the device. Contact your authorized Hioki distributor or reseller.

Error LED display	Cause	Solution	Reference
The **ERROR** lamp is lit.	Command error	Check the send command character string. Check that the parameters are correct.	p. 71
	Execution error	Some commands cannot be used during scan operation. Check that those commands are not used. Some commands cannot be used under specific conditions.	p. 80
	Startup self-test error	When an error occurs during self-test, the **ERROR** lamp lights up and the device cannot be controlled. Repair is necessary.	p. 23

10.2 List of Device Error Numbers

This section provides a list of device error numbers.
You can acquire the number of any error that occurs as well as a description of the error using the `:SYSTem:ERRor?` query.
See: "Query and clear error information" (p. 100)

Error No.	Error description	Details	Solution	Reference
−100	Command error	Illegal command string	Check whether there is no error in the command string.	p. 71
−200	Execution error	Unable to execute command with the specified conditions	It may not be possible to execute the command in question under the present conditions.	p. 80
−220	Parameter error	Out-of-range or illegal parameter	Check the command parameter range or string.	p. 90
−222	Bad Slot/Ch	Illegal slot or channel specification	Check the specification method and parameter string.	p. 98
−313	Backup lost	Corrupt device hardware information	Repair is necessary.	–
−315	Setting backup lost	Corrupt settings backup data		
−330	Self-test failed	Error during self-test		
−360	Communication error	Communications error	Check the communications settings (forward speed, etc.). Check whether the communications lines are being affected by noise.	p. 68
−361	Rs232c parity error	RS-232C parity error		
−362	Rs232c framing error	RS-232C framing error		
−363	Rs232c overrun	RS-232C overrun error		
−365	Time out error	Timeout		
−370	Module backup failed	Corrupt module information	Repair is necessary.	–
−371	Comm transfer Timeout	Communications forwarding function timeout	Check the communications settings on the connected instrument. Check the command being sent for errors.	p. 69
−372	Comm transfer overrun	Communications forwarding function receive buffer full		
−373	Comm Transfer RS232C error	Communications forwarding function RS-232C communications error		
−400	Query error	Full send buffer when sending a query	Be sure to receive the response when you send a query.	p. 76

10.3 Repair and Inspection

Replaceable parts and operating lifetimes

The characteristics of some of the parts used in the product may deteriorate with extended use.
To ensure the product can be used over the long term, it is recommended to replace these parts on a periodic basis.
When replacing parts, please contact your authorized Hioki distributor or reseller.
The operating lifetime of the parts varies depending on the operating environment and frequency of use. Parts are not guaranteed to operate throughout the recommended replacement cycle.

Part name	Recommended replacement cycle	Remarks/Conditions
Electrolytic capacitor	Approx. 10 years	The board on which this part is installed needs to be replaced.
Relay	50 million cycles, no load	Since the relay is consumable, a new module needs to be purchased.
	10 million cycles, 30 V capacitive load (Peak 500 mA, pulse width 1 μs)	

The module relay cannot be repaired or replaced. Please purchase a new module.

11 Multiplexer Module

Thoroughly read "Before installing the module" (p. 5) beforehand.

11.1 SW9001 Multiplexer Module (2-wire/4-wire)

Features

The SW9001 is a multiplexer module that can be attached to the SW1001 or SW1002 Switch Mainframe.

- 2-wire 22-channel or 4-wire 11-channel multiplexer
- The module reduces electromagnetic induction (eddy current) in AC impedance measurement and minimizes the influence on measured values by reducing magnetic flux leakage due to measurement current and separating the source wire from the sense wire.
- It can be connected up to 2 instruments by switching the analog bus.

Specifications

General Specifications

Operating environment	Indoor, pollution degree 2, altitude up to 2000 m (6562 ft.)	
Operating temperature and humidity	Temperature Humidity	0°C to 40°C (32°F to 104°F) 80% RH or less (no condensation)
Storage temperature and humidity	Temperature Humidity	−10°C to 50°C (14°F to 122°F) Less than 40°C (104°F), 80% RH or less (no condensation) 40°C (104°F) or higher and less than 45°C (113°F), 60% RH or less (no condensation) 45°C to 50°C (113°F to 122°F), 50% RH or less (no condensation)
Standards	Safety EMC	EN61010 EN61326 Class A
Dimensions	Approx. 25.5W × 110H × 257D mm (1.00"W × 4.33"H × 10.12"D) (excluding the projection)	
Mass	Approx. 210 g (7.4 oz.)	
Product warranty period	3 years Relays, fuses, and connector: Not covered by the warranty	
Accessory	Instruction Manual	

Basic specifications

Number of channels	22 channels (2-wire)/11 channels (4-wire)	
Contact system	Armature relay	
Connection method	2-wire/4-wire	
Opening/closing time	5 ms (open) /5 ms (close) Except for the control time and contact bounce time	
Channel switching operation	Break before make	
Channel switching time	11 ms (excluding the measurement time)	
Contact rating	Maximum allowable voltage	Between HIGH and LOW, 60 V DC, 30 V AC rms, 42.4 V peak
	Maximum allowable current	Between HIGH and LOW, 1 A DC, 1 A AC rms
	Maximum allowable power	Between HIGH and LOW, 30 W (resistance load)
Maximum rated voltage to earth	60 V DC (Anticipated transient overvoltage: 60 V)	
Offset voltage*1	Less than 5 μV (for **TERMINAL 1** and **TERMINAL 2** sense terminals)	
Initial circuit resistance (Cycle value between HIGH and LOW)	Less than 1.5 Ω (when SW1001 or SW1002 **TERMINAL 1** is used)	
	Less than 0.7 Ω (when SW1001 or SW1002 **TERMINAL 2**, **TERMINAL 3** is used)	
Insulation resistance (at 60 V DC)	Channel between HIGH and LOW	1 GΩ or more
	Between channels	1 GΩ or more
	Between channel and ground	1 GΩ or more
Capacitance*2	Channel between HIGH and LOW	Less than 3000 pF
	Between channels	Less than 100 pF
	Between channel and ground	Less than 1000 pF
Contact lifetime (reference value)	No load	50 million cycles
	30 V capacitive load (1.2 μF + 60 Ω, Peak 500 mA)	10 million cycles
Short protection fuse (Cannot be replaced by customers)	For every channel Rated current 2.5 A DC, fusing current 5.0 A DC	
Shield switching	The shield wire connection point can be selected from the following. **TERMINAL 1** LOW, **TERMINAL 2** source LOW, **TERMINAL 3** sense shield, **TERMINAL 1** LOW + **TERMINAL 3** sense shield, **GND**, or not connected	
Contact opening/closing frequency recording	Recorded for every relay Maximum recording count 1 billion times Recorded in the internal non-volatile memory	
Measurement connector	D-sub 50-pin, male, screw #4-40 UNC	

*1: Offset voltage is the value 1 minute after the channel is closed. The ambient temperature is supposed to be completely stabilized and the device is fully adjusted to the ambient temperature.
*2: When twelve units of the SW9001 are installed in the SW1002, measurement frequency is 100 kHz.

Measurement influence

(1) Conditions

Warm-up time	None
Temperature and humidity	23°C±5°C (73°F±9°F), 80% RH or less
Measurement conditions	Measurement cable length 0 m (Connect the measuring object to the SW9001's connector.) Use the specified connection cable between the switch mainframe and the target measuring instrument. Based on the conditions separately defined for each target measuring instrument. Based on the guaranteed accuracy conditions for use in conjunction with an instrument.

(2) Combined measurement accuracy

The combined measurement accuracy for an instrument and the switch (main frame and module) can be calculated using the following formula:
Combined measurement accuracy = Instrument accuracy + combination measurement influence

(3) Combination measurement influence

BT3561A, BT3562A, BT3563A, BT3562 and BT3563 (connected using L2108)

Range	Measurement influence	Conditions, remarks
R 3 mΩ	±0.1% f.s.	–
R 30 mΩ to 300 Ω	±0.03% f.s.	–
R 3000 Ω	±3.0% rdg. ±0.03% f.s.	Measurement errors cannot be detected. (BT3562 or BT3563)
All V Ranges	±5 μV*1	After the ambient operating temperature is stabilized. Within 1 minute after the contact is closed.

3561 (connected using L2108)

Range	Measurement influence	Conditions, remarks
All R ranges	±0.03% f.s.	–
All V ranges	±5 μV*1	After the ambient operating temperature is stabilized. Within 1 minute after the contact is closed.

DM7275 and DM7276 (connected using L4930)

Range	Measurement influence	Conditions, remarks
All V ranges	±7 μV*1	After the ambient operating temperature is stabilized. Within 1 minute after the contact is closed.

*1: Voltage measurement influence includes the offset voltage indicated in the basic specifications.

RM3545 (connected using L2108)*2

LP: OFF

Range	Max. measurement range	Measurement current		OVC	Measurement influence ± (% of reading + % of full scale)			
		Switching			FAST	MED	SLOW1	SLOW2
10 mΩ	12.000 00 mΩ	–	1 A	OFF	0.024+0.450	0.024+0.330		0.024+0.330
				ON	0.024+0.060	0.024+0.008		0.006+0.001
100 mΩ	120.000 0 mΩ	High	1 A	OFF	0.024+0.065	0.024+0.065		
				ON	0.024+0.012	0.024+0.004		
		Low	100 mA	OFF	0.006+0.450	0.006+0.330		
				ON	0.006+0.060	0.006+0.008		
1000 mΩ	1200.000 mΩ	High	100 mA	OFF	0.005+0.065	0.005+0.057		
				ON	0.005+0.012	0.005+0.004		
		Low	10 mA	OFF	0.004+0.450	0.004+0.330		
				ON	0.004+0.060	0.004+0.008		
10 Ω	12.000 00 Ω	High	10 mA	OFF	0.004+0.065	0.004+0.057		
				ON	0.004+0.012	0.004+0.003		
		Low	1 mA	OFF	0.004+0.450	0.004+0.330		
				ON	0.004+0.060	0.004+0.008		
100 Ω	120.000 0 Ω	High	10 mA	OFF	0.003+0.023	0.003+0.011		
				ON	0.003+0.020	0.003+0.003		
		Low	1 mA	OFF	0.004+0.065	0.004+0.065		
				ON	0.004+0.012	0.004+0.004		
1000 Ω	1200.000 Ω	–	1 mA	OFF	0.003+0.020	0.003+0.008		
				ON	0.003+0.020	0.003+0.004		
10 kΩ	12.000 00 kΩ		1 mA	–	0.006+0.020	0.005+0.008		
100 kΩ	120.000 0 kΩ		100 μA		0.024+0.020	0.023+0.008		
1000 kΩ to 1000 MΩ*3	–		–		–	–		

*2: When the internal thermoelectromotive force is stable.
*3: No effect is specified. (Measured values cannot be guaranteed.)

LP: ON

Range	Max. measurement range	Measurement current	Measurement accuracy ± (% of reading + % of full scale)			
			FAST	MED	SLOW1	SLOW2
LP1000 mΩ	1200.00 mΩ	1 mA	0.080+0.400	0.080+0.040		
LP10 Ω	12.000 0 Ω	500 μA	0.080+0.200	0.080+0.020		
LP100 Ω	120.000 Ω	50 μA	0.080+0.200	0.080+0.020		
LP1000 Ω	1200.00 Ω	5 μA	0.080+0.200	0.080+0.020		

RM3545A (connected using L2108)*2

LP: OFF and PR: OFF

Range	Max. measurement range	Measurement current		OVC, A-OVC	Measurement influence ± (% of reading + % of full scale)				Additional accuracy without 0ADJ (% f.s.)
		Switching			FAST	MED	SLOW1	SLOW2	
1000 μΩ	1200.000 μΩ	High	1 A	OFF	–	–		–	–
				ON	0.005+0.05	0.005+0.01		0.005+0.005	–
		Low	500 mA	OFF	–	–		–	–
				ON	–	–		–	–
10 mΩ	12.000 00 mΩ	High	1 A	OFF	0.005+0.007	0.005+0.002		0.005+0.001	0.03
				ON	0.005+0.007	0.005+0.002		0.005+0.001	–
		Low	500 mA	OFF	–	–		–	–
				ON	–	–		–	–
100 mΩ	120.000 0 mΩ	High	1 A	OFF	0.024+0.065	0.024+0.065			–
				ON	0.024+0.012	0.024+0.004			–
		Low	100 mA	OFF	0.006+0.450	0.006+0.330			–
				ON	0.006+0.060	0.006+0.008			–
1000 mΩ	1200.000 mΩ	High	100 mA	OFF	0.005+0.065	0.005+0.057			–
				ON	0.005+0.012	0.005+0.004			–
		Low	10 mA	OFF	0.004+0.450	0.004+0.330			–
				ON	0.004+0.060	0.004+0.008			–
10 Ω	12.000 00 Ω	High	10 mA	OFF	0.004+0.065	0.004+0.057			–
				ON	0.004+0.012	0.004+0.003			–
		Low	1 mA	OFF	0.004+0.450	0.004+0.330			–
				ON	0.004+0.060	0.004+0.008			–
100 Ω	120.000 0 Ω	High	10 mA	OFF	0.003+0.023	0.003+0.011			–
				ON	0.003+0.020	0.003+0.003			–
		Low	1 mA	OFF	0.004+0.065	0.004+0.065			–
				ON	0.004+0.012	0.004+0.004			–
1000 Ω	1200.000 Ω	–	1 mA	OFF	0.003+0.020	0.003+0.008			–
				ON	0.003+0.020	0.003+0.004			–
10 kΩ	12.000 00 kΩ		1 mA	–	0.006+0.020	0.005+0.008			–
100 kΩ	120.000 0 kΩ		100 μA		0.024+0.020	0.023+0.008			–
1000 kΩ to 1000 MΩ*3	–		–		–	–			–

*2: When the internal thermoelectromotive force is stable.
*3: No effect is specified. (Measured values cannot be guaranteed.)

LP: ON

Range	Max. measurement range	Measurement current	Measurement accuracy ± (% of reading + % of full scale)			
			FAST	MED	SLOW1	SLOW2
LP1000 mΩ	1200.00 mΩ	1 mA	0.080+0.400	0.080+0.040		
LP10 Ω	12.000 0 Ω	500 μA	0.080+0.200	0.080+0.020		
LP100 Ω	120.000 Ω	50 μA	0.080+0.200	0.080+0.020		
LP1000 Ω	1200.00 Ω	5 μA	0.080+0.200	0.080+0.020		

PR: ON

Range	Max. measurement range	Measurement current		OVC, A-OVC	Measurement influence ± (% of reading + % of full scale)				Additional accuracy without 0ADJ (% f.s.)
		Switching			FAST	MED	SLOW1	SLOW2	
PR 1000 μΩ	1200.000 μΩ	High	1A	OFF	–	–		–	–
				ON	0.005+0.05	0.005+0.01		0.005+0.005	–
		Low	500 mA	OFF	–	–		–	–
				ON	–	–		–	–
PR 10 mΩ	12.000 00 mΩ	High	1 A	OFF	0.005+0.007	0.005+0.002		0.005+0.001	0.03
				ON	0.005+0.007	0.005+0.002		0.005+0.001	–
		Low	500 mA	OFF	–	–		–	–
				ON	–	–		–	–
PR 100 mΩ	120.000 0 mΩ	–	1 A	OFF	0.024+0.065	0.024+0.065			–
				ON	0.024+0.012	0.024+0.004			–

Switching wiring diagram

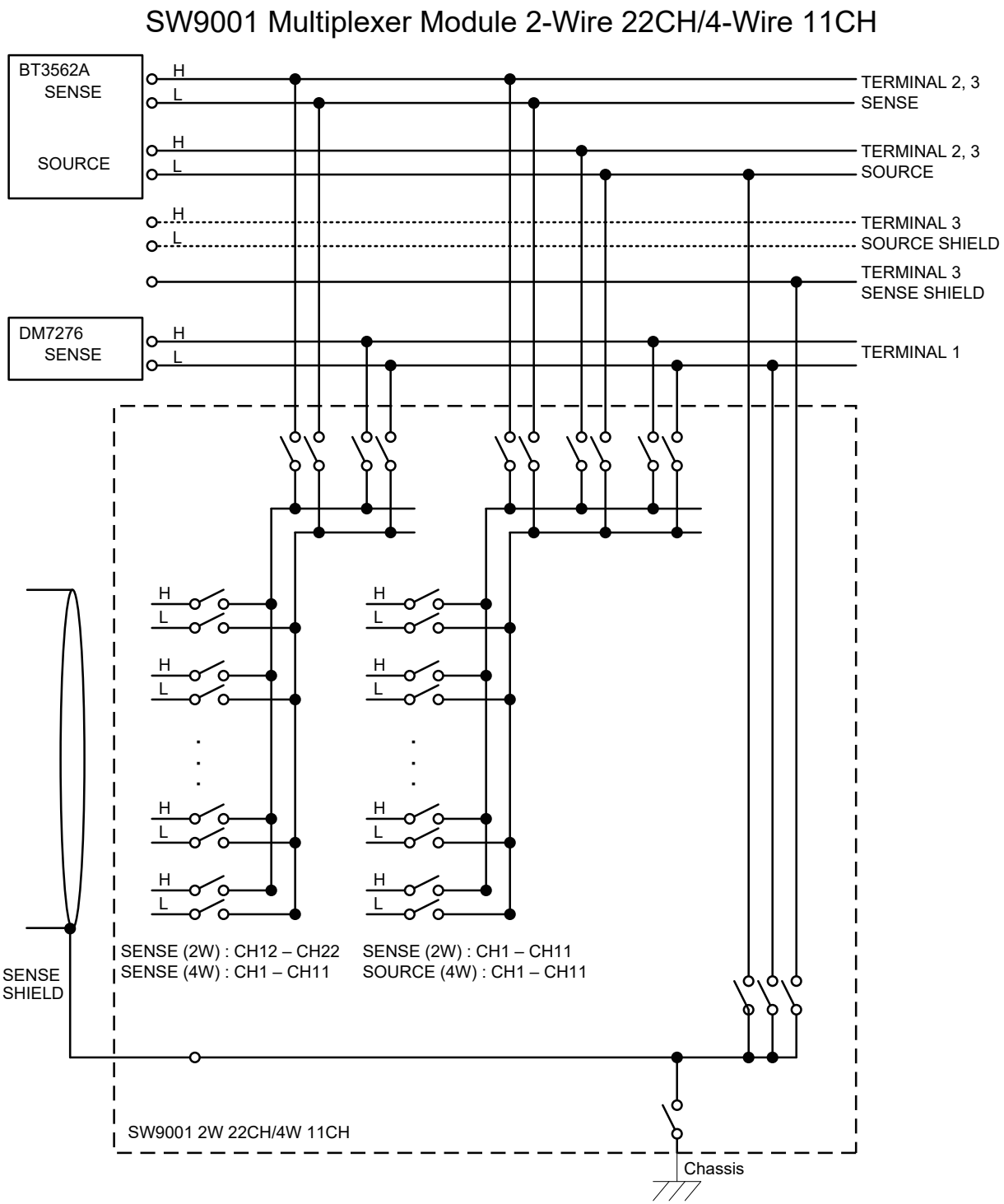

Connector wiring diagram

SW9001 connector signal list (2-wire)

The following table shows the pin assignment for use with 2-wire instruments (such as DM7275 and DM7276)

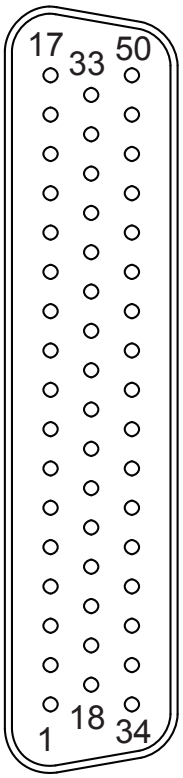

Pin No.	Signal		Pin No.	Signal		Pin No.	Signal	
17	Shield		33	CH11	H	50	CH11	L
16	CH10	H	32	CH9	L	49	CH10	L
15	CH9	H	31	CH8	H	48	CH8	L
14	CH7	H	30	CH6	L	47	CH7	L
13	CH6	H	29	CH5	H	46	CH5	L
12	CH4	H	28	CH3	L	45	CH4	L
11	CH3	H	27	CH2	H	44	CH2	L
10	CH1	H	26	Shield		43	CH1	L
9	Shield		25	CH22	H	42	CH22	L
8	CH21	H	24	CH20	L	41	CH21	L
7	CH20	H	23	CH19	H	40	CH19	L
6	CH18	H	22	CH17	L	39	CH18	L
5	CH17	H	21	CH16	H	38	CH16	L
4	CH15	H	20	CH14	L	37	CH15	L
3	CH14	H	19	CH13	H	36	CH13	L
2	CH12	H	18	Shield		35	CH12	L
1	Shield		–	–		34	Shield	

The measurement connector frame of the module is connected to the casing (metal) of the device as well as the protective ground terminal of the power inlet (conductive).

SW9001 connector signal list (4-wire)

The following table shows the pin assignment for use with 4-wire instruments (such as BT3562A and RM3545A)

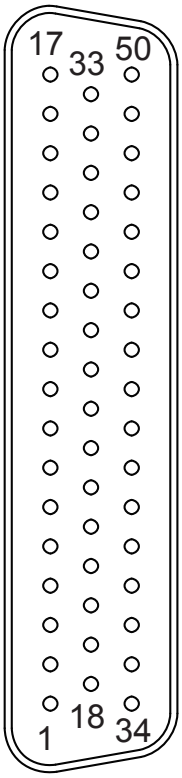

Pin No.	Signal			Pin No.	Signal			Pin No.	Signal		
17	Shield			33	Source	CH11	H	50	Source	CH11	L
16	Source	CH10	H	32	Source	CH9	L	49	Source	CH10	L
15	Source	CH9	H	31	Source	CH8	H	48	Source	CH8	L
14	Source	CH7	H	30	Source	CH6	L	47	Source	CH7	L
13	Source	CH6	H	29	Source	CH5	H	46	Source	CH5	L
12	Source	CH4	H	28	Source	CH3	L	45	Source	CH4	L
11	Source	CH3	H	27	Source	CH2	H	44	Source	CH2	L
10	Source	CH1	H	26	Shield			43	Source	CH1	L
9	Shield			25	Sense	CH11	H	42	Sense	CH11	L
8	Sense	CH10	H	24	Sense	CH9	L	41	Sense	CH10	L
7	Sense	CH9	H	23	Sense	CH8	H	40	Sense	CH8	L
6	Sense	CH7	H	22	Sense	CH6	L	39	Sense	CH7	L
5	Sense	CH6	H	21	Sense	CH5	H	38	Sense	CH5	L
4	Sense	CH4	H	20	Sense	CH3	L	37	Sense	CH4	L
3	Sense	CH3	H	19	Sense	CH2	H	36	Sense	CH2	L
2	Sense	CH1	H	18	Shield			35	Sense	CH1	L
1	Shield			–	–			34	Shield		

The measurement connector frame of the module is connected to the casing (metal) of the device as well as the protective ground terminal of the power inlet (conductive).

Acquiring the relay opening/closing frequency

You can acquire the relay opening/closing frequency as stored in the module's non-volatile memory.
To acquire the relay opening/closing frequency, use `:SYSTem:MODule:COUNt?` (p. 88).
Relays are identified by number alone (Relay 1 through Relay 31).

Correspondence of module relays and relay numbers (SW9001)

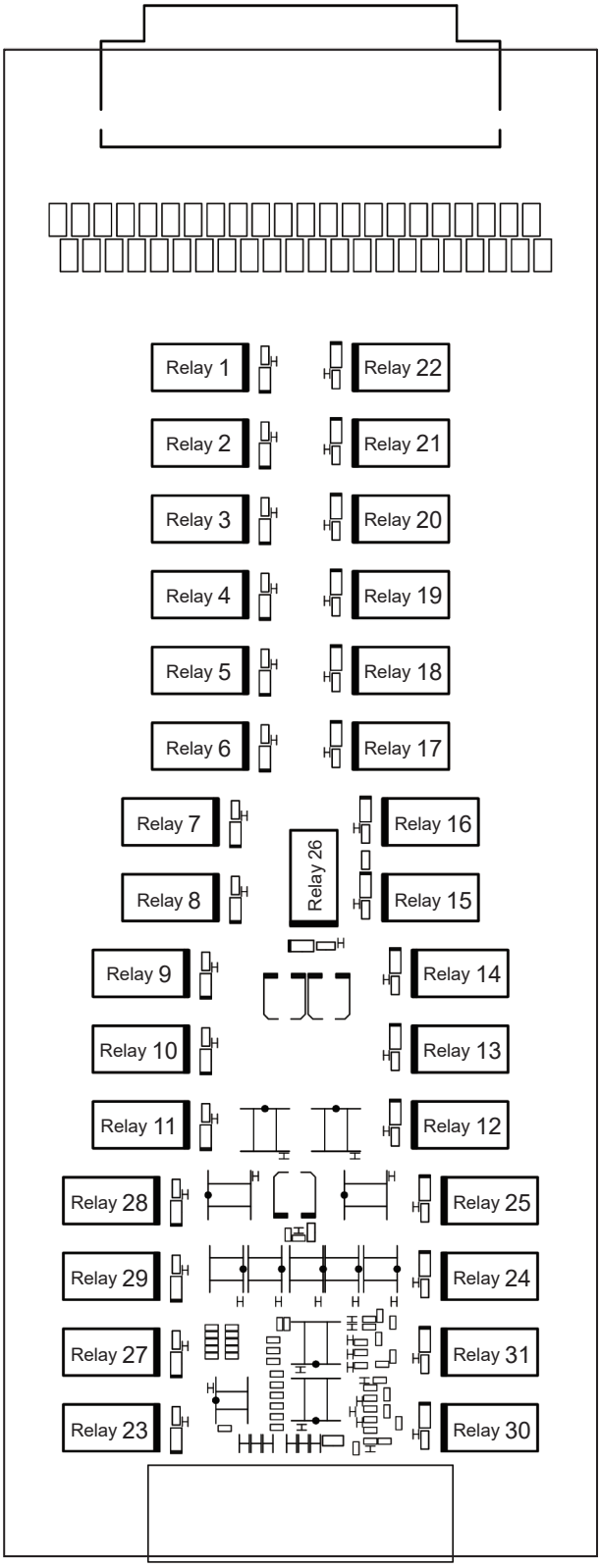

11.2 SW9002 Multiplexer Module (4-terminal pair)

Features

The SW9002 is a multiplexer module that can be attached to the SW1001 or SW1002 Switch Mainframe.

- 4-terminal-pair 6-channel multiplexer
- It can be switched to 2-wire (sense channel only).
- The 4-terminal pair structure reduces electromagnetic induction (eddy current) in AC impedance measurement and minimizes the influence on measured values.
- An LCR meter can be used with shield wire connection between sense and source H and L.
- It can be connected up to 2 instruments by switching the analog bus.

Specifications

General Specifications

Operating environment	Indoor, pollution degree 2, altitude up to 2000 m (6562 ft.)	
Operating temperature and humidity	Temperature Humidity	0°C to 40°C (32°F to 104°F) 80% RH or less (no condensation)
Storage temperature and humidity	Temperature Humidity	−10°C to 50°C (14°F to 122°F) Less than 40°C (104°F), 80% RH or less (no condensation) 40°C (104°F) or higher and less than 45°C (113°F), 60% RH or less (no condensation) 45°C to 50°C (113°F to 122°F), 50% RH or less (no condensation)
Standards	Safety EMC	EN61010 EN61326 Class A
Dimensions	Approx. 25.5W × 110H × 257D mm (1.00"W × 4.33"H × 10.12"D) (excluding the projection)	
Mass	Approx. 196 g (6.9 oz.)	
Product warranty period	3 years Relays, fuses, and connector: Not covered by the warranty	
Accessory	Instruction Manual	

Basic specifications

Number of channels	6 channels	
Contact system	Armature relay	
Connection method	4-terminal pair/2-wire	
Opening/closing time	5 ms (open) /5 ms (close) Except for the control time and contact bounce time	
Channel switching operation	Break before make	
Channel switching time	11 ms (excluding the measurement time)	
Contact rating	Maximum allowable voltage	Source: Between HIGH and LOW, 60 V DC, 30 V AC rms, 42.4 V peak Sense: Between HIGH and LOW, 60 V DC, 30 V AC rms, 42.4 V peak
	Maximum allowable current	Source: Between HIGH and LOW, 2 A DC, 2 A AC rms Sense: Between HIGH and LOW, 1 A DC, 1 A AC rms
	Maximum allowable power	Source: Between HIGH and LOW, 30 W (resistance load) Sense: Between HIGH and LOW, 30 W (resistance load)
Maximum rated voltage to earth	60 V DC (Anticipated transient overvoltage: 60 V)	
Offset voltage*1	Less than 5 μV (for **TERMINAL 1** and **TERMINAL 2** sense terminals)	
Initial circuit resistance (Cycle value between HIGH and LOW)	Less than 1.5 Ω (when SW1001 or SW1002 **TERMINAL 1** is used)	
	Less than 1.0 Ω (when SW1001 or SW1002 **TERMINAL 2**, **TERMINAL 3** is used)	
Insulation resistance (at 60 V DC)	Channel between HIGH and LOW	1 GΩ or more
	Between channels	1 GΩ or more
	Between channel and ground	1 GΩ or more
Capacitance*2	Channel between HIGH and LOW	Less than 100 pF (when connected to BT4560, IM3590*3) Less than 3000 pF (other than the above)
	Between channels	Less than 100 pF
	Between channel and ground	Less than 1000 pF
Contact lifetime (reference value)	No load	50 million cycles
Short protection fuse (Cannot be replaced by customers)	For every channel Rated current 2.5 A DC, fusing current 5.0 A DC	
Shield switching	The shield wire connection point can be selected from the following. **TERMINAL 1** sense LOW, **TERMINAL 3** sense shield, **GND**, or not connected	
Contact opening/closing frequency recording	Recorded for every relay. Maximum recording count 1 billion times Recorded in the internal non-volatile memory.	
Measurement connector	D-sub 37-pin, male, screw #4-40 UNC	

*1: Offset voltage is the value 1 minute after the channel is closed. The ambient temperature is supposed to be completely stabilized and the device is fully adjusted to the ambient temperature.
*2: When twelve units of the SW9002 are installed in the SW1002, measurement frequency is 100 kHz.
*3: When connecting the shielding to the **TERMINAL 3** sense shielding. For other connections, less than 3000 pF.

Measurement influence

(1) Conditions

Warm-up time	None
Temperature and humidity	23°C±5°C (73°F±9°F), 80% RH or less
Measurement conditions	Measurement cable length 0 m (Connect the measuring object to the SW9002's connector.) Use the specified connection cable between the switch mainframe and the target measuring instrument. Based on the conditions separately defined for each target measuring instrument. Based on the guaranteed accuracy conditions for use in conjunction with an instrument.

(2) Combined measurement accuracy

The combined measurement accuracy for an instrument and the switch (main frame and module) can be calculated using the following formula:
Combined measurement accuracy = Instrument accuracy + combination measurement influence

(3) Combination measurement influence

BT4560 (connected using L2004)

Range	Measurement influence		Conditions, remarks
	Frequency range 0.1 Hz to 100 Hz	Frequency range 110 Hz to 1050 Hz	
3 mΩ R	±0.05% f.s.	±0.1% f.s.	–
3 mΩ X	±0.1% f.s.	±1.0% f.s.	–
10 mΩ R	±0.015% f.s.	±0.03% f.s.	–
10 mΩ X	±0.03% f.s.	±0.3% f.s.	–
100 mΩ R	±0.01% f.s.	±0.01% f.s.	–
100 mΩ X	±0.015% f.s.	±0.03% f.s.	–
All V ranges	±5 μV*1		After the ambient operating temperature is stabilized. Within 1 minute after the contact is closed.

IM3590*2 (connected using L2004)

Range	Measurement influence	Conditions, remarks
100 mΩ to 10 Ω	(IM3590 measurement accuracy) × 1	DC, 0.001 Hz to 10.000 kHz
100 Ω to 10 kΩ	(IM3590 measurement accuracy) × 3	DC, 0.001 Hz to 10.000 kHz Upper limit of impedance 10 kΩ

DM7275 and DM7276 (connected using L4930)

Range	Measurement influence	Conditions, remarks
All V ranges	±7 μV*1	After the ambient operating temperature is stabilized. Within 1 minute after the contact is closed.

*1: Voltage measurement influence includes the offset voltage indicated in the basic specifications.
*2: Combination measurement influence provided for use with the IM3590 are offered as reference values. Reference values describe a specific example and do not constitute a guarantee.

Switching wiring diagram

SW9002 Multiplexer Module 4-Terminal Pair 6CH

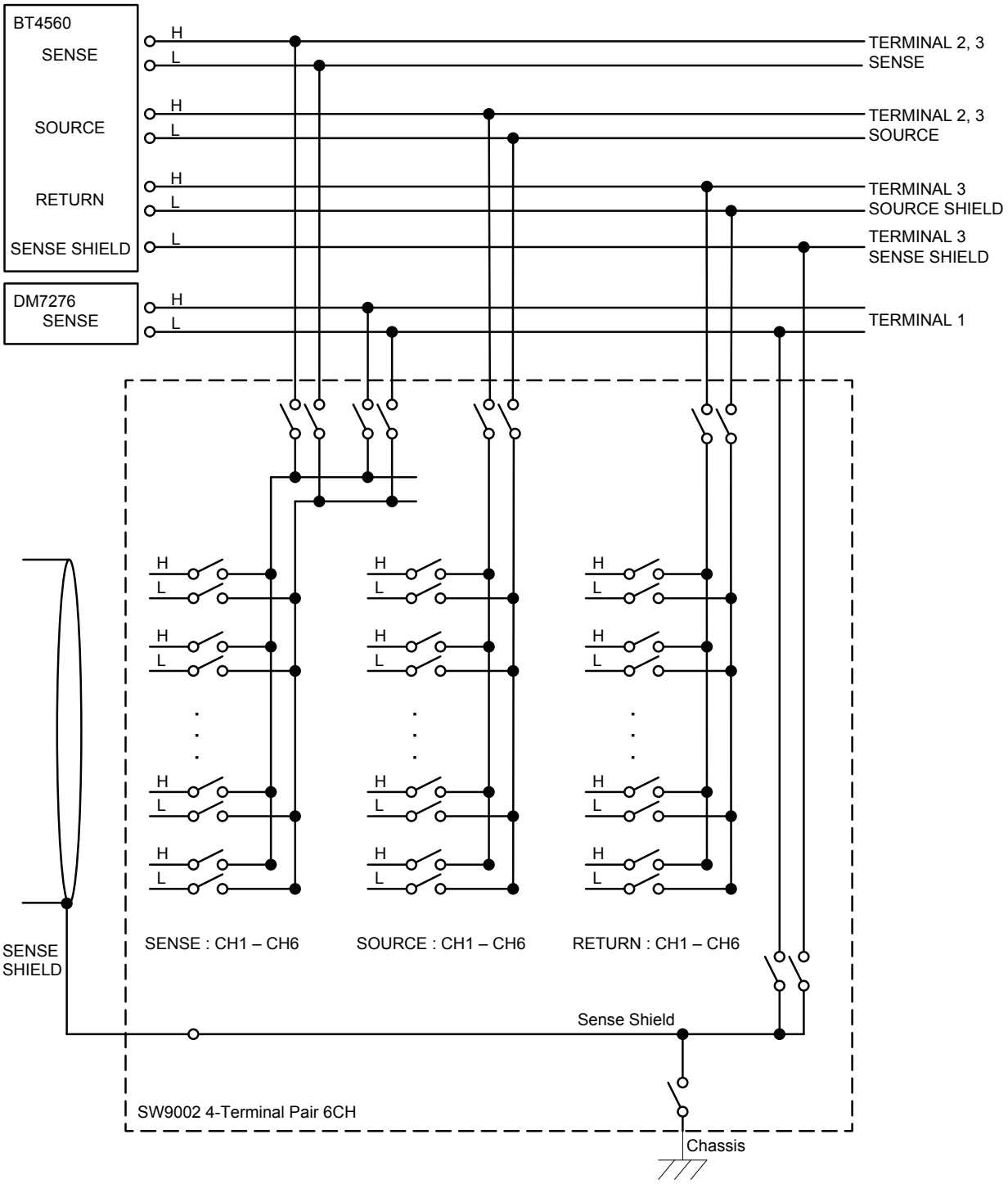

Connector wiring diagram

SW9002 connector signal list

The following table shows the pin assignment for 4-terminal pair instruments (such as BT4560 and IM3590)

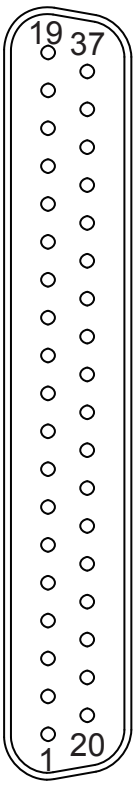

Pin No.	Signal			Pin No.	Signal		
19	Return	CH6	L	37	Source	CH6	L
18	Return	CH5	L	36	Source	CH5	L
17	Return	CH4	L	35	Source	CH4	L
16	Return	CH3	L	34	Source	CH3	L
15	Return	CH2	L	33	Source	CH2	L
14	Return	CH1	L	32	Source	CH1	L
13	Source	CH1	H	31	Return	CH1	H
12	Source	CH2	H	30	Return	CH2	H
11	Source	CH3	H	29	Return	CH3	H
10	Source	CH4	H	28	Return	CH4	H
9	Source	CH5	H	27	Return	CH5	H
8	Source	CH6	H	26	Return	CH6	H
7	Shield			25	Sense	CH1	L
6	Sense	CH1	H	24	Sense	CH2	L
5	Sense	CH2	H	23	Sense	CH3	L
4	Sense	CH3	H	22	Sense	CH4	L
3	Sense	CH4	H	21	Sense	CH5	L
2	Sense	CH5	H	20	Sense	CH6	L
1	Sense	CH6	H				

When using the device as a 2-wire model, only sense CH1 to CH6 are enabled.

The measurement connector frame of the module is connected to the casing (metal) of the device as well as the protective ground terminal of the power inlet (conductive).

Acquiring the relay opening/closing frequency

You can acquire the relay opening/closing frequency as stored in the module's non-volatile memory.
To acquire the relay opening/closing frequency, use `:SYSTem:MODule:COUNt?` (p. 88).
Relays are identified by number alone (Relay 1 through Relay 22).

Correspondence of module relays and relay numbers (SW9002)

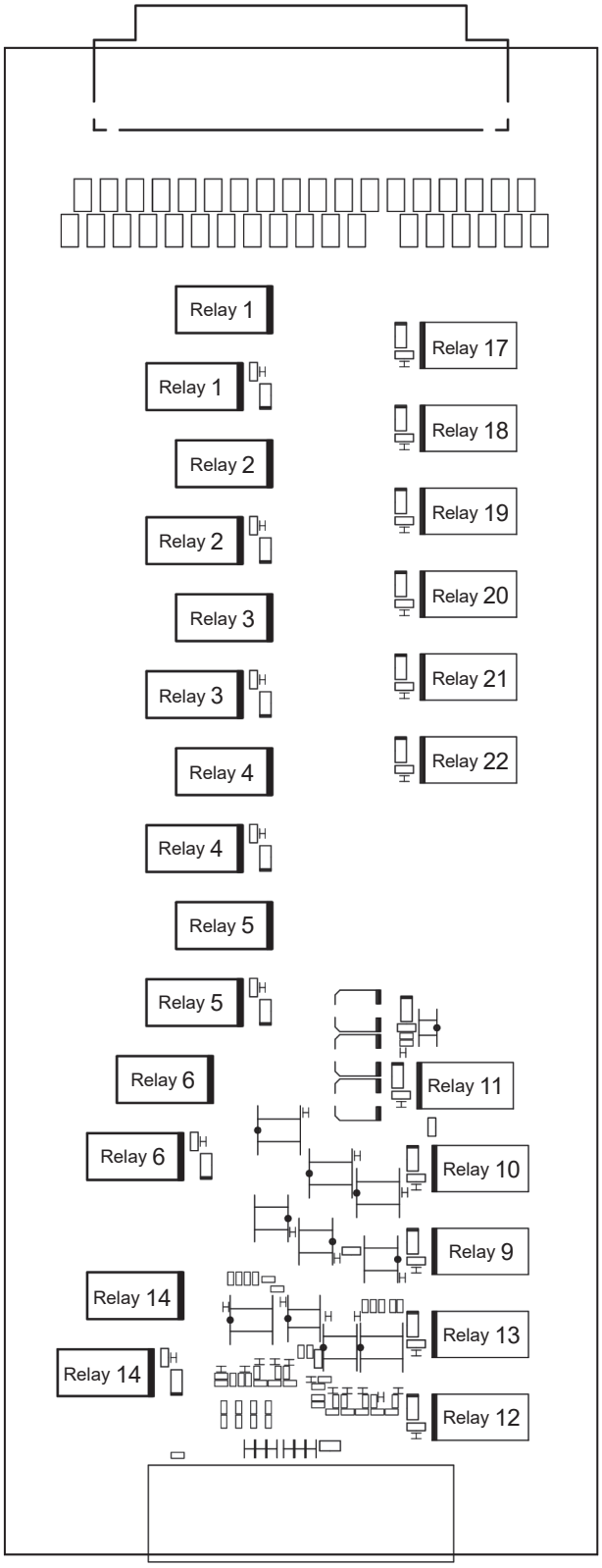

11.3 Accuracy Calculation Example

This section describes how to calculate the combined accuracy of the device and a connected measuring instrument.
This process consists of calculating the measurement influence for each measuring instrument (target instrument) used in the combination.
The measurement accuracy when using the device and a module is calculated using the following formula:

Combination measurement accuracy = Instrument accuracy + combination measurement influence

For more information about a given module's measurement influences, see the module's specifications.

- SW9001
  "Measurement influence" (p. 131)
- SW9002
  "Measurement influence" (p. 141)

Below shows an example of accuracy calculation.

Example 1: Use of the device in combination with the BT3562A

Used module	SW9001
Instrument	BT3562A ΩV function, 3 mΩ range, 6 V range, sampling SLOW
Measurement value	1 mΩ, 4 V

Resistance measurement accuracy = BT3562A resistance measurement accuracy + SW9001 measurement influence (BT3562A 3 mΩ range)
= (±0.5% rdg. ± 10 dgt.) + (±0.1% f.s.)
= (±0.5% × 1 mΩ + 0.0010 mΩ) + [±(0.1% × 3.1000 mΩ)]
= (±0.0060 mΩ) + (±0.0031 mΩ)
= ±0.0091 mΩ (total error)

Voltage measurement accuracy = BT3562A voltage measurement accuracy + SW9001 measurement influence (all BT3562A voltage ranges)
= (±0.01% rdg. ± 3 dgt.) + (±5 μV)
= (±0.01% × 4 V ± 0.00003 V) + (±5 μV)
= (±0.00043 V) + (±5 μV)
= ±0.000435 V (total error)

Example 2: Use of the device in combination with the BT4560

Used module	SW9002
Instrument	BT4560 RX function, 3 mΩ range, 1000 Hz, sampling SLOW
Measurement value	R 1 mΩ, X 0 mΩ

R measurement accuracy = BT4560 R measurement accuracy + SW9002 measurement influence (BT4560 3 mΩ range R)
= [±(0.004 |R| + 0.0052 |X|) ± 8 dgt.] + (±0.1% f.s.)
= [±(0.004 × 1 mΩ + 0.0052 × 0 mΩ) ± 0.0008 mΩ] + [±(0.1% × 3.0000 mΩ)]
= (±0.0048 mΩ) + (±0.0030 mΩ)
= ±0.0078 mΩ (total error)

X measurement accuracy = BT4560 X measurement accuracy + SW9002 measurement influence (BT4560 3 mΩ range X)
= [±(0.004 |X| + 0.0052 |R|) ± 8 dgt.] + (±1.0% f.s.)
= [±(0.004 × 0 mΩ + 0.0052 × 1 mΩ) ± 0.0008 mΩ] + [±(1.0% × 3.0000 mΩ)]
= (±0.0052 mΩ) + (±0.0300 mΩ)
= ±0.0352 mΩ (total error)

Example 3: Use of the device in combination with the DM7276

Used module	SW9001
Instrument	DM7276 V function, 100 mV range, sampling MEDIUM
Measurement value	100 mV

Voltage measurement accuracy = DM7276 voltage measurement accuracy + SW9001 measurement influence (all DM7276 voltage ranges)
= (±0.0015% rdg. ± 2 μV) + (±7 μV)
= (±0.0015% × 100 mV ± 2 μV) + (±7 μV)
= (±0.0035 mV) + (±7 μV)
= ±0.0105 mV (total error)

Example 4: Use of the device in combination with the RM3545A

Used module	SW9001
Instrument	RM3545A, LP OFF, 10 mΩ range, SPEED SLOW2, OVC ON
Measurement value	1 mΩ

Resistance measurement accuracy = RM3545A resistance measurement accuracy + SW9001 measurement influence (RM3545A 10 mΩ range, SPEED SLOW2, OVC ON)
= (±0.045% rdg. ± 0.001% f.s.) + (±0.005% rdg. ± 0.001% f.s.)
= (±0.045% × 1 mΩ ± 0.001% × 10 mΩ) + (±0.005% × 1 mΩ ± 0.001% × 10 mΩ)
= (±0.00045 mΩ ±0.00010 mΩ) + (±0.00005 mΩ ±0.00010 mΩ)
= ±0.00070 mΩ (total error)

12 Appendix

12.1 Measurement cable

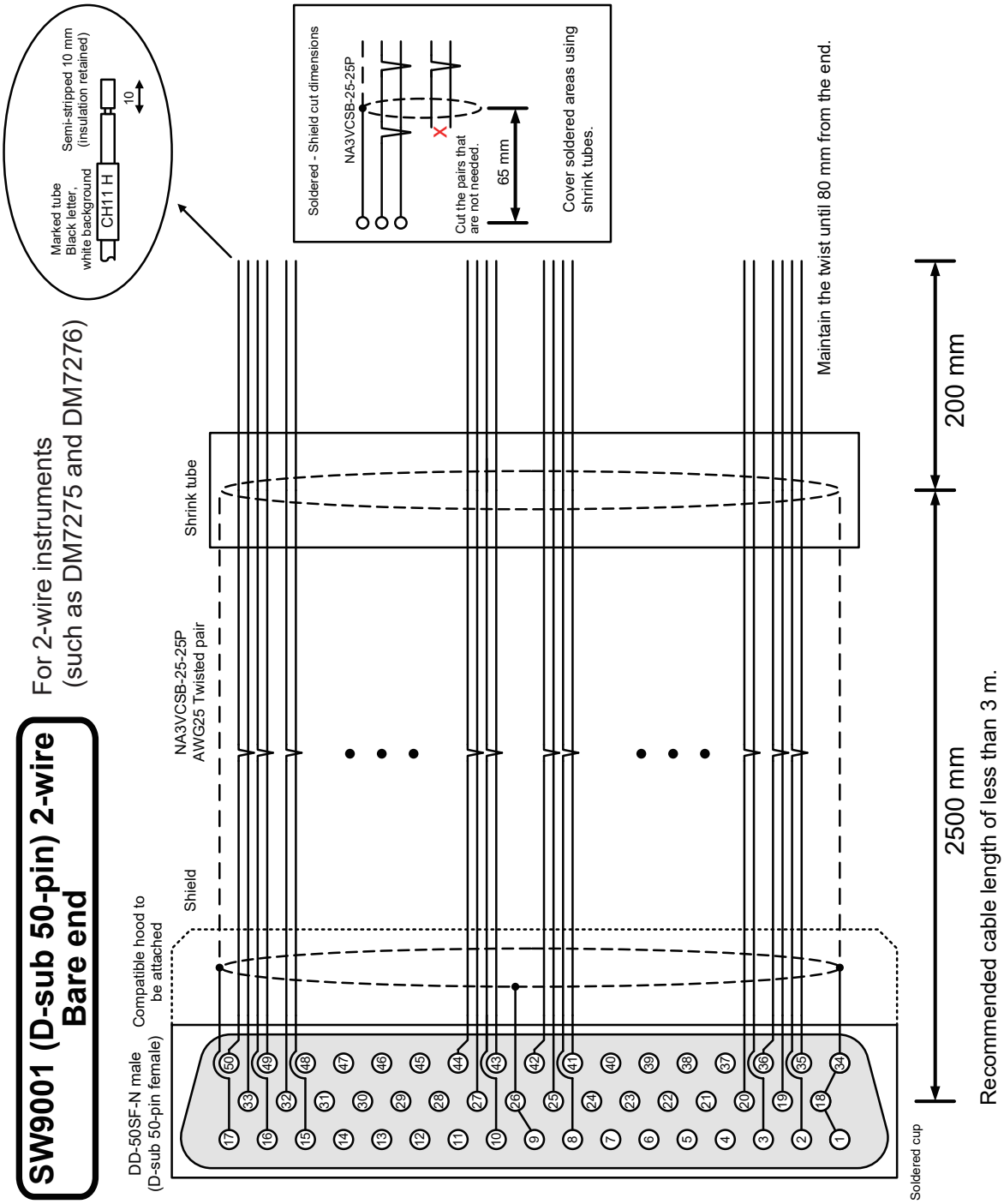

Dsub50 Female	AWG25	Cable end Label letter
33	Twisted pair	CH11 H
50		CH11 L
16	Twisted pair	CH10 H
49		CH10 L
15	Twisted pair	CH9 H
32		CH9 L
31	Twisted pair	CH8 H
48		CH8 L
14	Twisted pair	CH7 H
47		CH7 L
13	Twisted pair	CH6 H
30		CH6 L
29	Twisted pair	CH5 H
46		CH5 L
12	Twisted pair	CH4 H
45		CH4 L
11	Twisted pair	CH3 H
28		CH3 L
27	Twisted pair	CH2 H
44		CH2 L
10	Twisted pair	CH1 H
43		CH1 L
25	Twisted pair	CH22 H
42		CH22 L
8	Twisted pair	CH21 H
41		CH21 L
7	Twisted pair	CH20 H
24		CH20 L
23	Twisted pair	CH19 H
40		CH19 L
6	Twisted pair	CH18 H
39		CH18 L
5	Twisted pair	CH17 H
22		CH17 L
21	Twisted pair	CH16 H
38		CH16 L
4	Twisted pair	CH15 H
37		CH15 L
3	Twisted pair	CH14 H
20		CH14 L
19	Twisted pair	CH13 H
36		CH13 L
2	Twisted pair	CH12 H
35		CH12 L
17	Shield	-
26		-
9		-
1		-
18		-
34		-

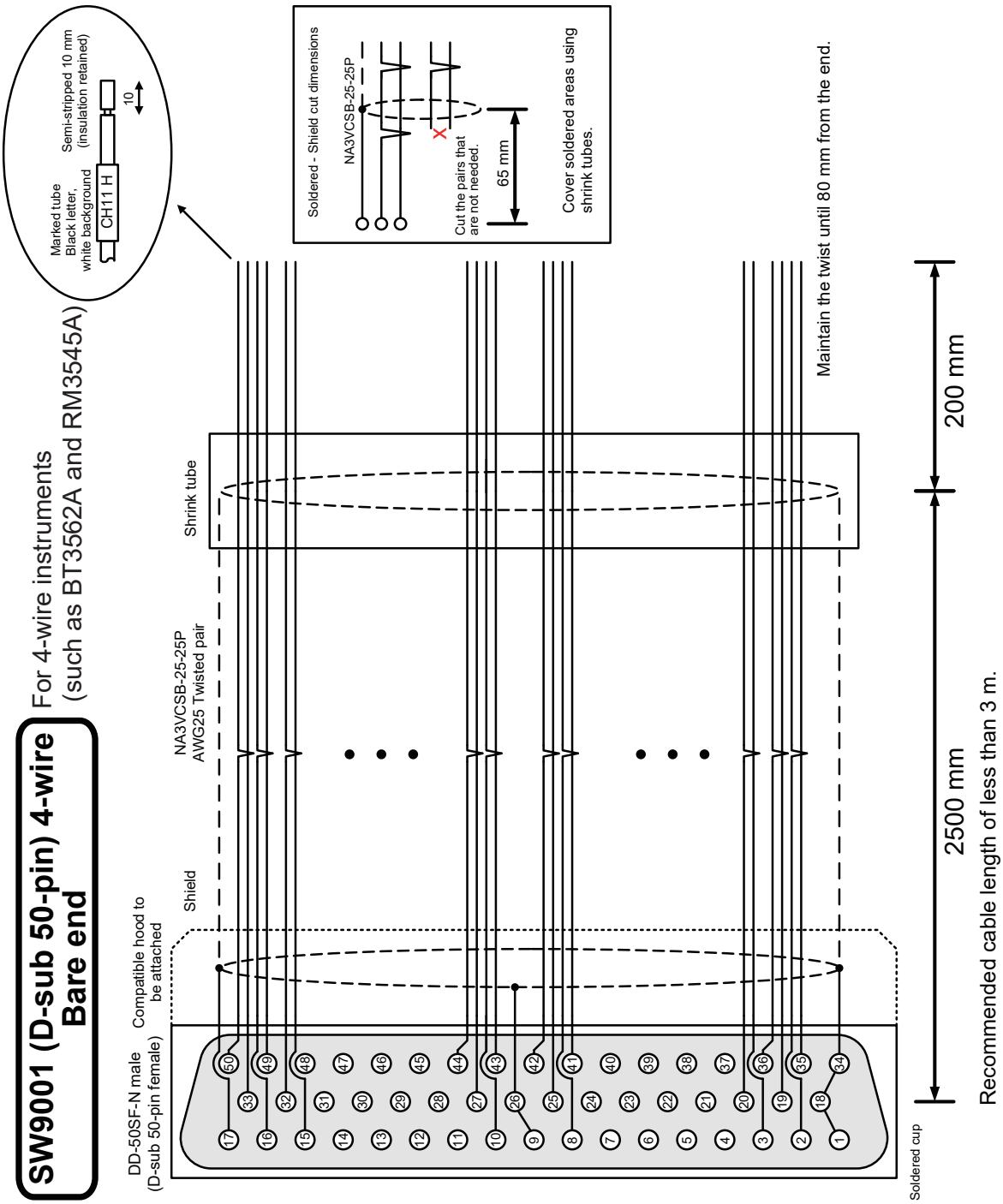

Dsub50 Female	AWG25	Cable end Label letter
33	Twisted pair	CH11 SRC-H
50		CH11 SRC-L
25	Twisted pair	CH11 SNS-H
42		CH11 SNS-L
16	Twisted pair	CH10 SRC-H
49		CH10 SRC-L
8	Twisted pair	CH10 SNS-H
41		CH10 SNS-L
15	Twisted pair	CH9 SRC-H
32		CH9 SRC-L
7	Twisted pair	CH9 SNS-H
24		CH9 SNS-L
31	Twisted pair	CH8 SRC-H
48		CH8 SRC-L
23	Twisted pair	CH8 SNS-H
40		CH8 SNS-L
14	Twisted pair	CH7 SRC-H
47		CH7 SRC-L
6	Twisted pair	CH7 SNS-H
39		CH7 SNS-L
13	Twisted pair	CH6 SRC-H
30		CH6 SRC-L
5	Twisted pair	CH6 SNS-H
22		CH6 SNS-L
29	Twisted pair	CH5 SRC-H
46		CH5 SRC-L
21	Twisted pair	CH5 SNS-H
38		CH5 SNS-L
12	Twisted pair	CH4 SRC-H
45		CH4 SRC-L
4	Twisted pair	CH4 SNS-H
37		CH4 SNS-L
11	Twisted pair	CH3 SRC-H
28		CH3 SRC-L
3	Twisted pair	CH3 SNS-H
20		CH3 SNS-L
27	Twisted pair	CH2 SRC-H
44		CH2 SRC-L
19	Twisted pair	CH2 SNS-H
36		CH2 SNS-L
10	Twisted pair	CH1 SRC-H
43		CH1 SRC-L
2	Twisted pair	CH1 SNS-H
35		CH1 SNS-L
17	Shield	-
26		-
9		-
1		-
18		-
34		-

SW9002 (D-sub 37-pin) 4-terminal pair - Bare end

Dsub37 Female	Signal	Coaxial cable	Cable end Marking letter
19	CH6 RETURN L	Shield	CH6 SRC-L
37	CH6 SOURCE L	Core wire	
18	CH5 RETURN L	Shield	CH5 SRC-L
36	CH5 SOURCE L	Core wire	
17	CH4 RETURN L	Shield	CH4 SRC-L
35	CH4 SOURCE L	Core wire	
16	CH3 RETURN L	Shield	CH3 SRC-L
34	CH3 SOURCE L	Core wire	
15	CH2 RETURN L	Shield	CH2 SRC-L
33	CH2 SOURCE L	Core wire	
14	CH1 RETURN L	Shield	CH1 SRC-L
32	CH1 SOURCE L	Core wire	
13	CH1 SOURCE H	Core wire	CH1 SRC-H
31	CH1 RETURN H	Shield	
12	CH2 SOURCE H	Core wire	CH2 SRC-H
30	CH2 RETURN H	Shield	
11	CH3 SOURCE H	Core wire	CH3 SRC-H
29	CH3 RETURN H	Shield	
10	CH4 SOURCE H	Core wire	CH4 SRC-H
28	CH4 RETURN H	Shield	
9	CH5 SOURCE H	Core wire	CH5 SRC-H
27	CH5 RETURN H	Shield	
8	CH6 SOURCE H	Core wire	CH6 SRC-H
26	CH6 RETURN H	Shield	
7	Shield	Shield	CH1 SNS-L
25	CH1 SENSE L	Core wire	
7	Shield	Shield	CH1 SNS-H
6	CH1 SENSE H	Core wire	
7	Shield	Shield	CH2 SNS-L
24	CH2 SENSE L	Core wire	
7	Shield	Shield	CH2 SNS-H
5	CH2 SENSE H	Core wire	
7	Shield	Shield	CH3 SNS-L
23	CH3 SENSE L	Core wire	
7	Shield	Shield	CH3 SNS-H
4	CH3 SENSE H	Core wire	
7	Shield	Shield	CH4 SNS-L
22	CH4 SENSE L	Core wire	
7	Shield	Shield	CH4 SNS-H
3	CH4 SENSE H	Core wire	
7	Shield	Shield	CH5 SNS-L
21	CH5 SENSE L	Core wire	
7	Shield	Shield	CH5 SNS-H
2	CH5 SENSE H	Core wire	
7	Shield	Shield	CH6 SNS-L
20	CH6 SENSE L	Core wire	
7	Shield	Shield	CH6 SNS-H
1	CH6 SENSE H	Core wire	

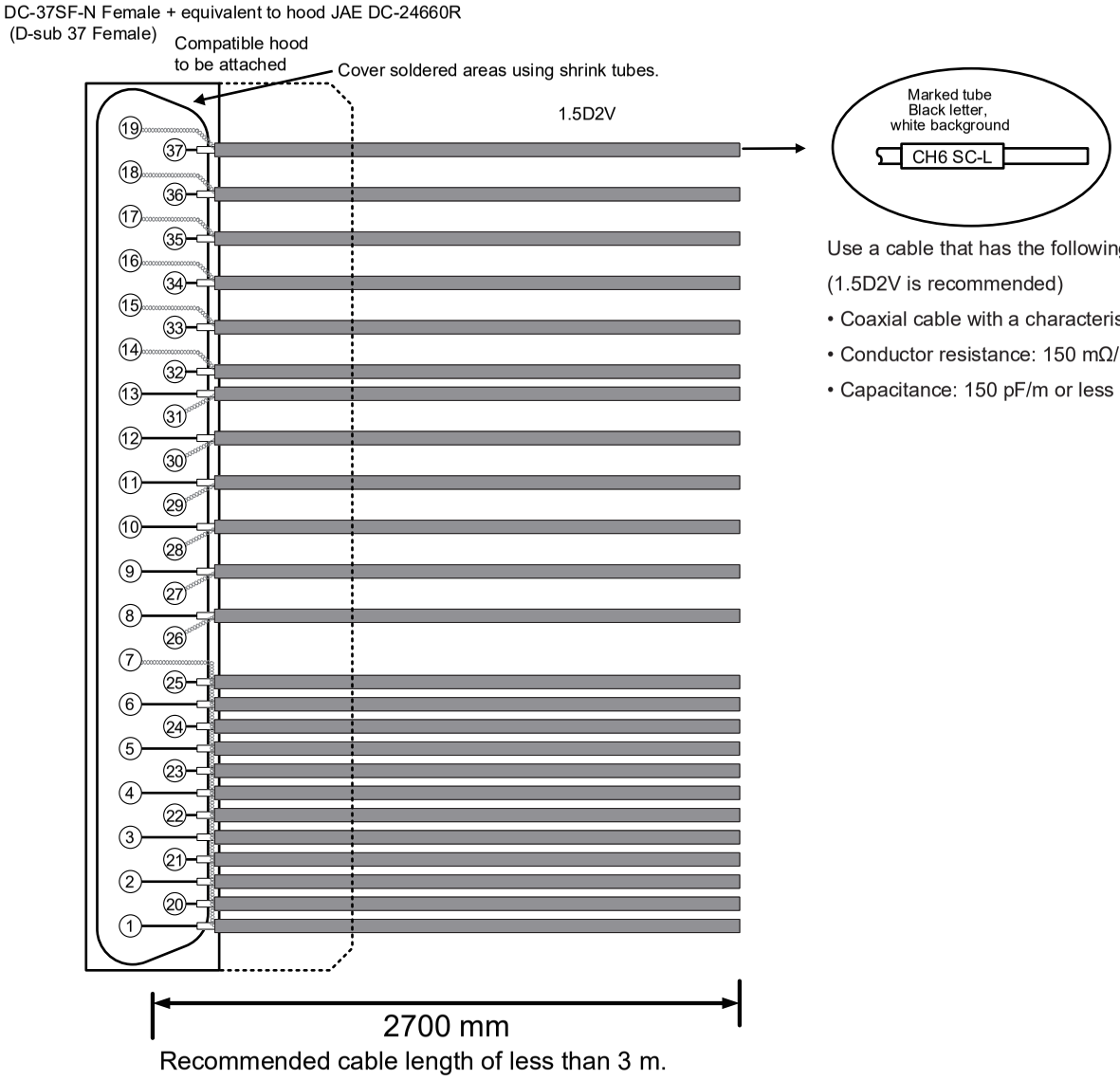

Use a cable that has the following characteristics:

(1.5D2V is recommended)

- Coaxial cable with a characteristic impedance of 50 Ω
- Conductor resistance: 150 mΩ/m or less
- Capacitance: 150 pF/m or less

12.2 Measuring Object Short Circuit due to Relay Contact Welding

The SW9001 and SW9002 multiplexer modules switch a measurement signal using a mechanical relay.
The relay contact may weld when relay switching is repeated with a large current flowing (also when the measuring object or instrument to be connected is capacitive). When relay contact welding occurs, the measuring object may be shorted. Periodic inspection is recommended.
Reference: "Checking for relay contact welding" (p. 26)

Example: When a battery cell is measured with the cell reversed

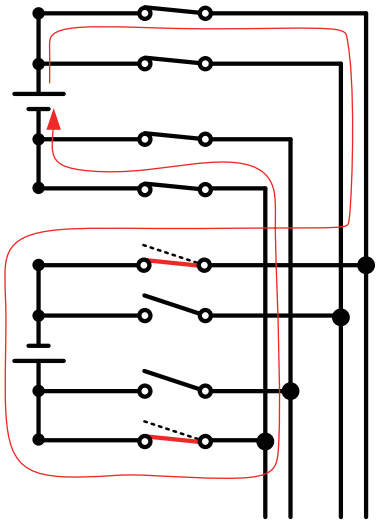

Example: When each of the stacked batteries is measured

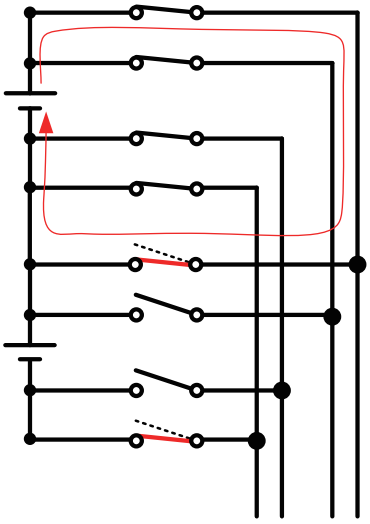

Module fuse rating

The SW9001 and SW9002 are provided with a fuse (board mounted type) in HIGH and LOW for each channel input to prevent possible risks if a high current flows through the circuit due to relay contact welding.

Module	Channel	Rated current	Fusing current
SW9001 SW9002	All channels	2.5 A DC	5.0 A DC

12.3 Rack Mount

A rack mount bracket can be attached if screws are removed from the side of the device.

⚠ WARNING

To prevent device damage or an electric shock, use only the screws that are originally installed. (Side: M3 × 6 mm, when the rack mount bracket is attached: M3 × 8 mm)
If you have lost a screw or find that a screw is damaged, please contact your authorized Hioki distributor or reseller.

Rack mount bracket

For SW1001, EIA

Unit: mm, Material: Cold-reduced carbon steel sheet, Thickness: 2.3

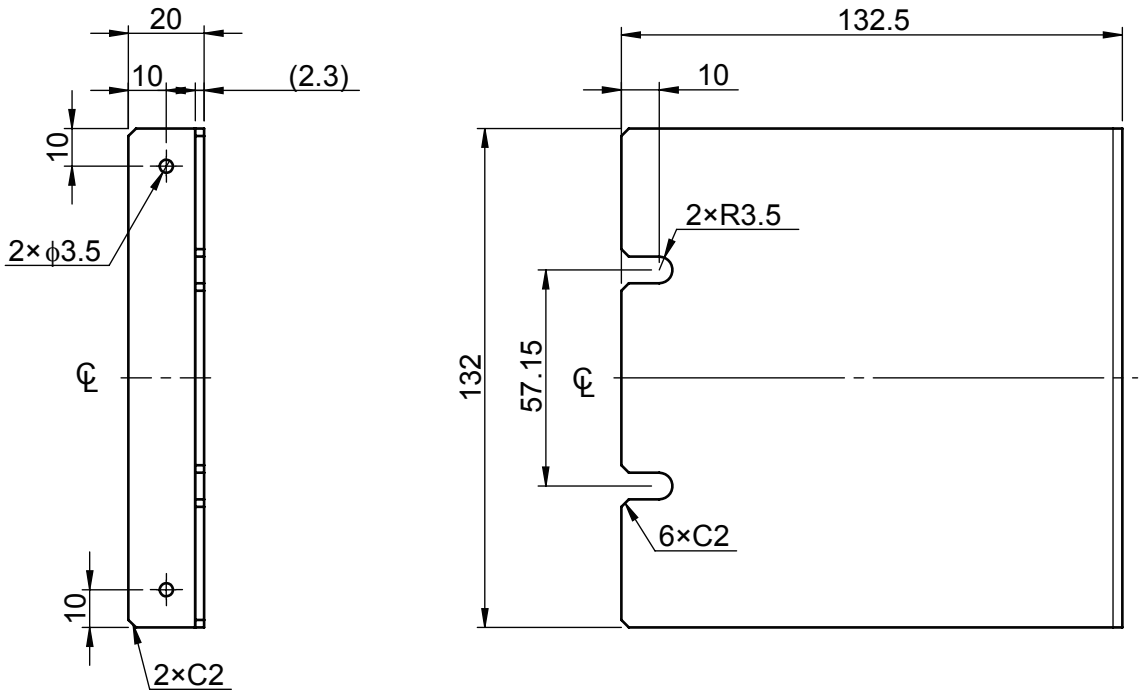

For SW1001, JIS

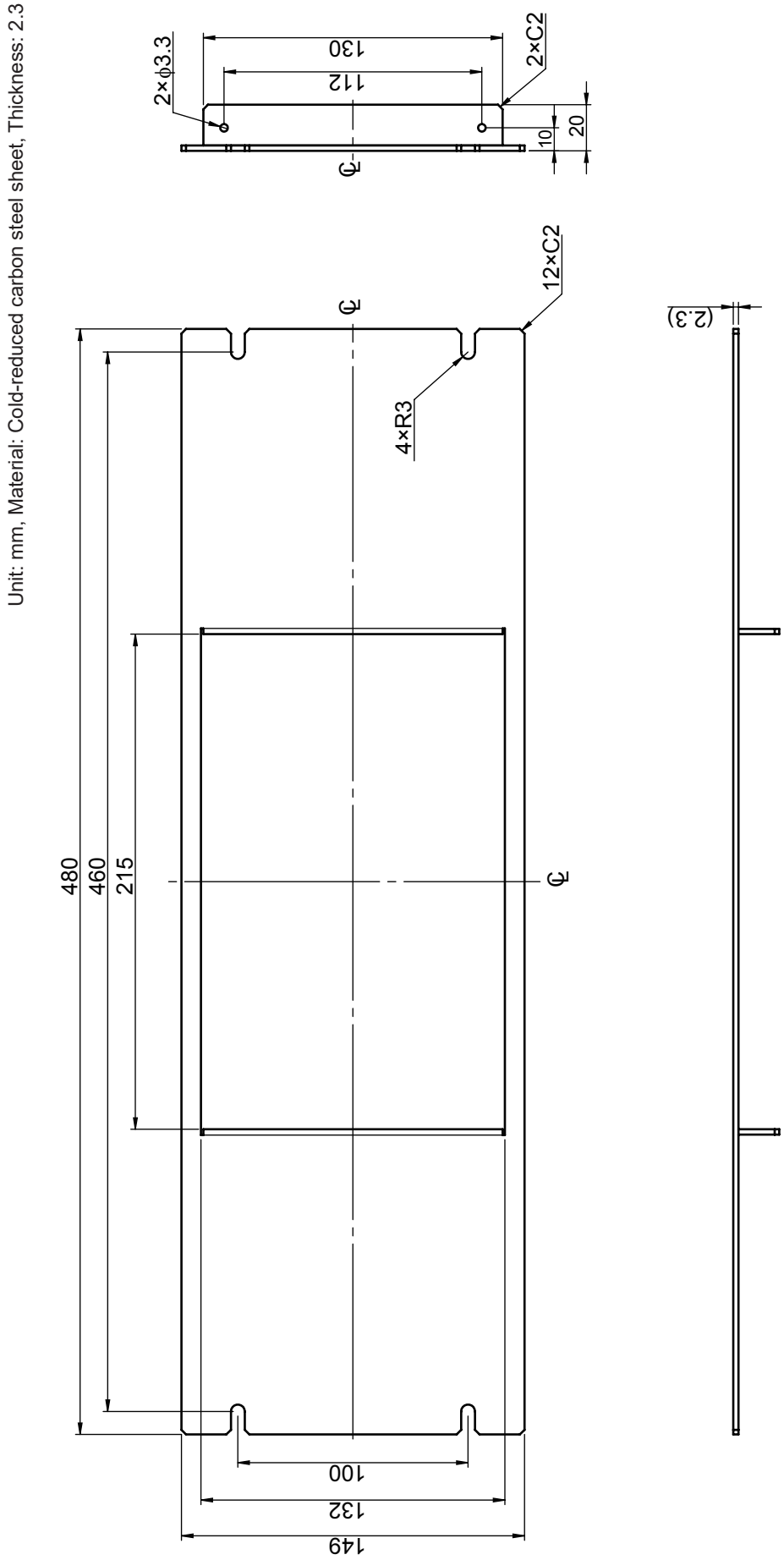

For SW1002, EIA

Unit: mm, Material: Cold-reduced carbon steel sheet, Thickness: 2.3

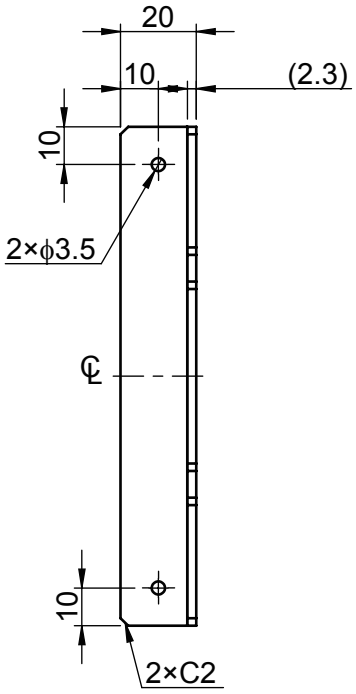

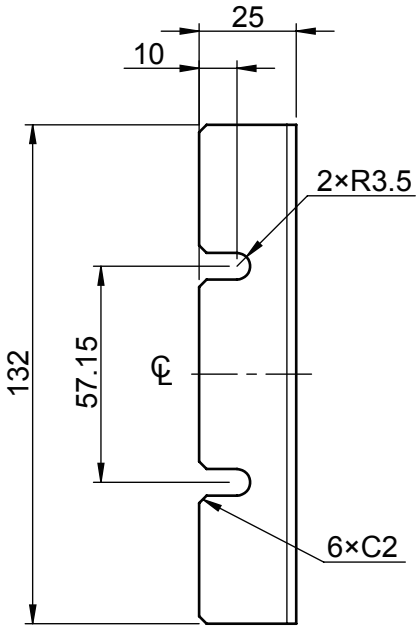

For SW1002, JIS

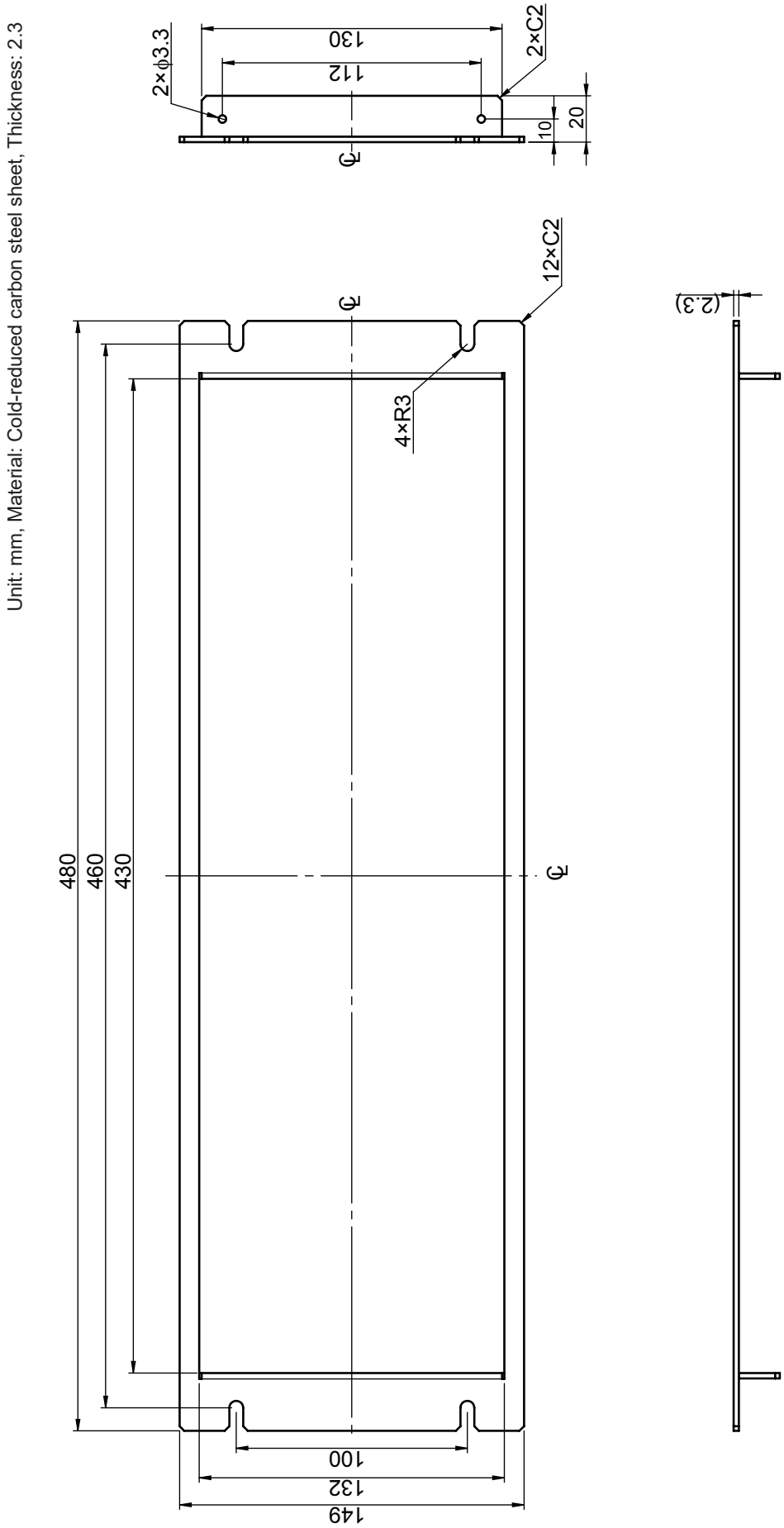

Attachment procedure (Example: SW1001)

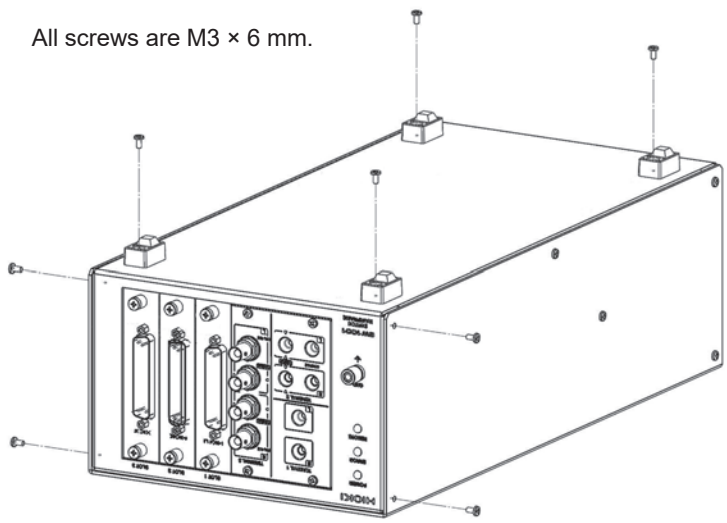

1 **Remove the four screws shown in the figure and remove the rubber feet from the bottom.**

2 **Remove the screws on the left and right sides shown in the figure (two screws each toward the front).**

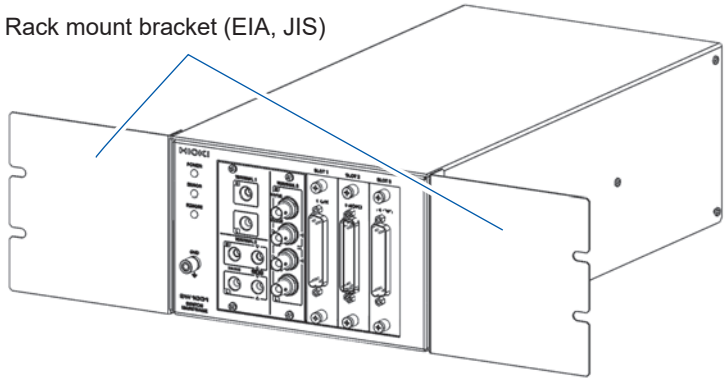

3 **Attach the rack mount bracket.**

Use M3 × 8 screws on the left and right side at the front of the device.

When mounting the device on a rack, use a commercially available base for reinforcement.

L-shape bracket (For installing the module in automated equipment)

L-shape bracket

Unit: mm

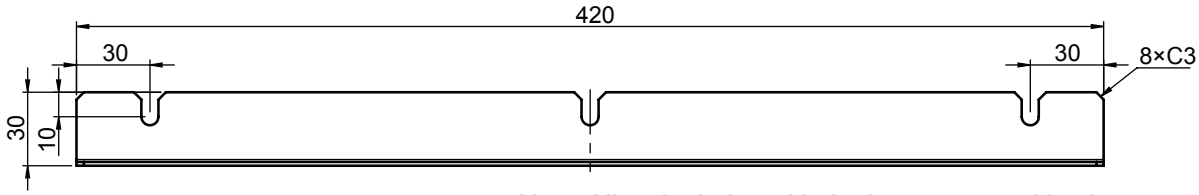

Note: Align the holes with the base prepared by the customer.

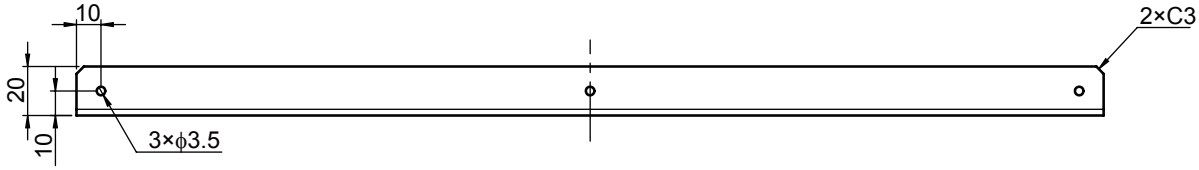

Attachment procedure (Example: SW1001)

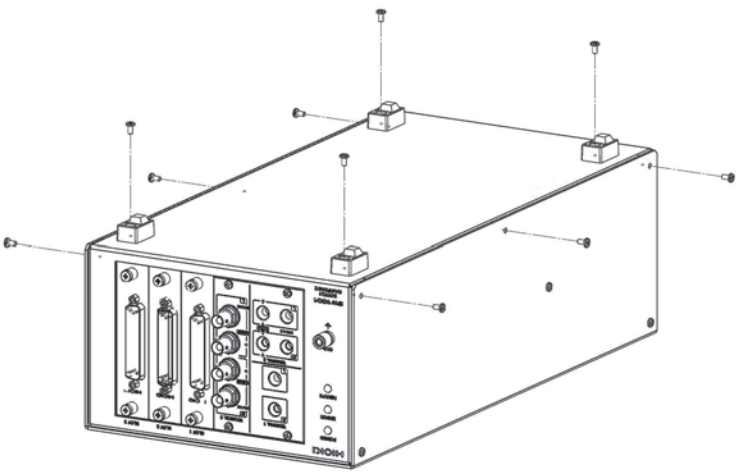

1 **Remove the four screws shown in the figure and remove the rubber feet from the bottom.**

2 **Remove the screws on the left and right sides shown in the figure (three screws each).**

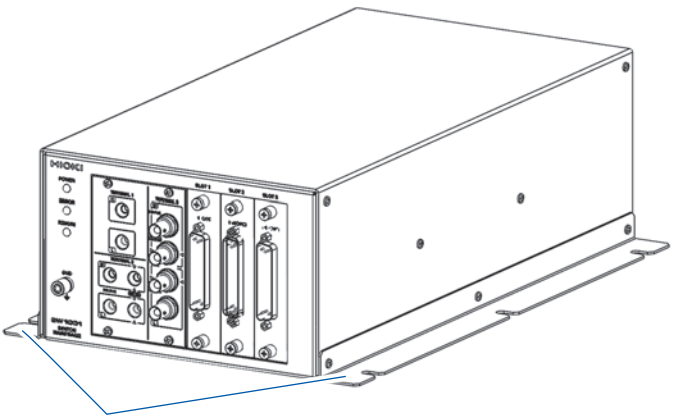

3 **Attach the L-shape bracket.**

Use M3 × 8 screws for three places each on the left and right sides to secure the bracket.

4 **Secure it to a base.**

12.4 Outline Drawings

SW1001

Unit: mm

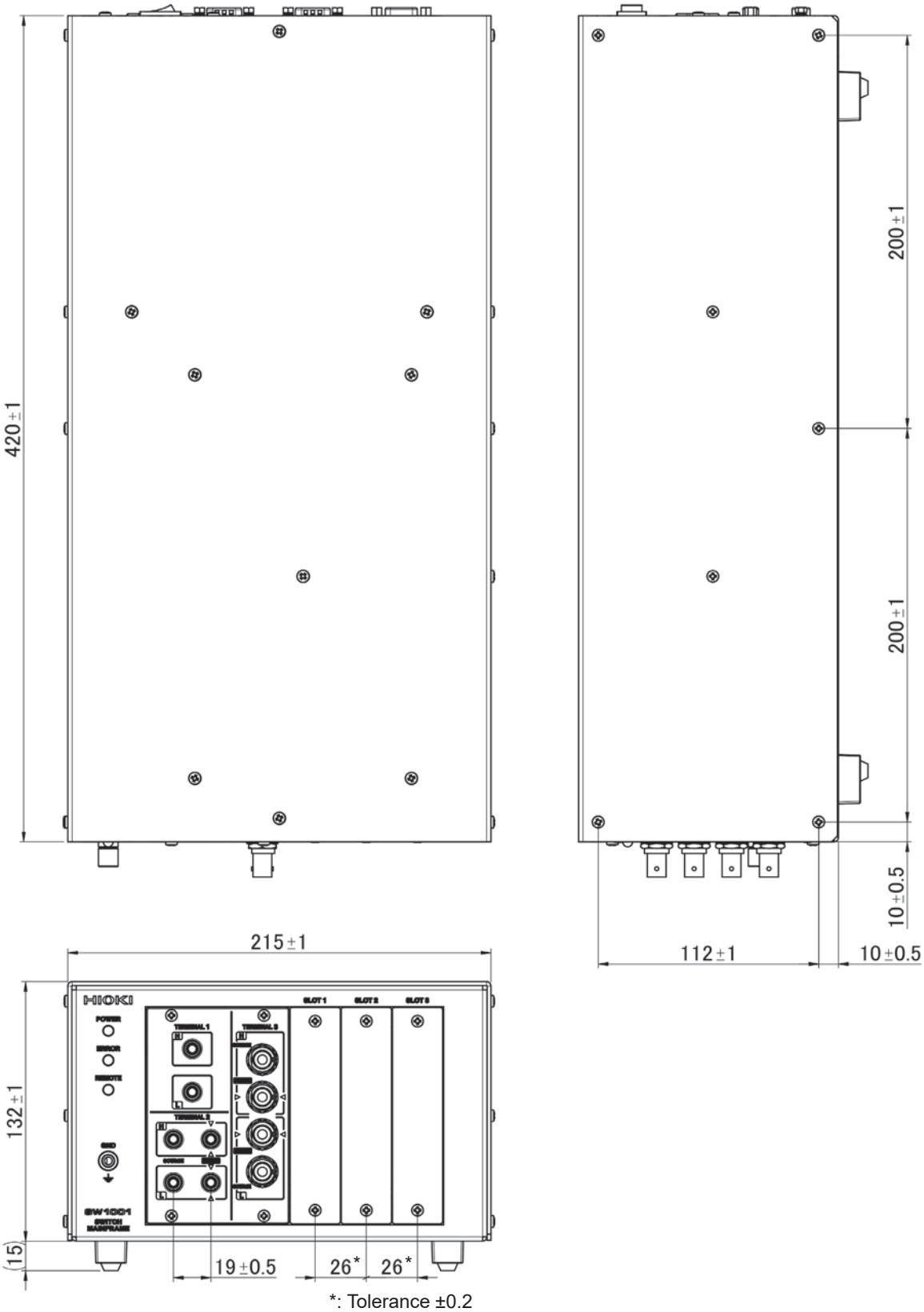

*: Tolerance ±0.2

SW1002

Unit: mm

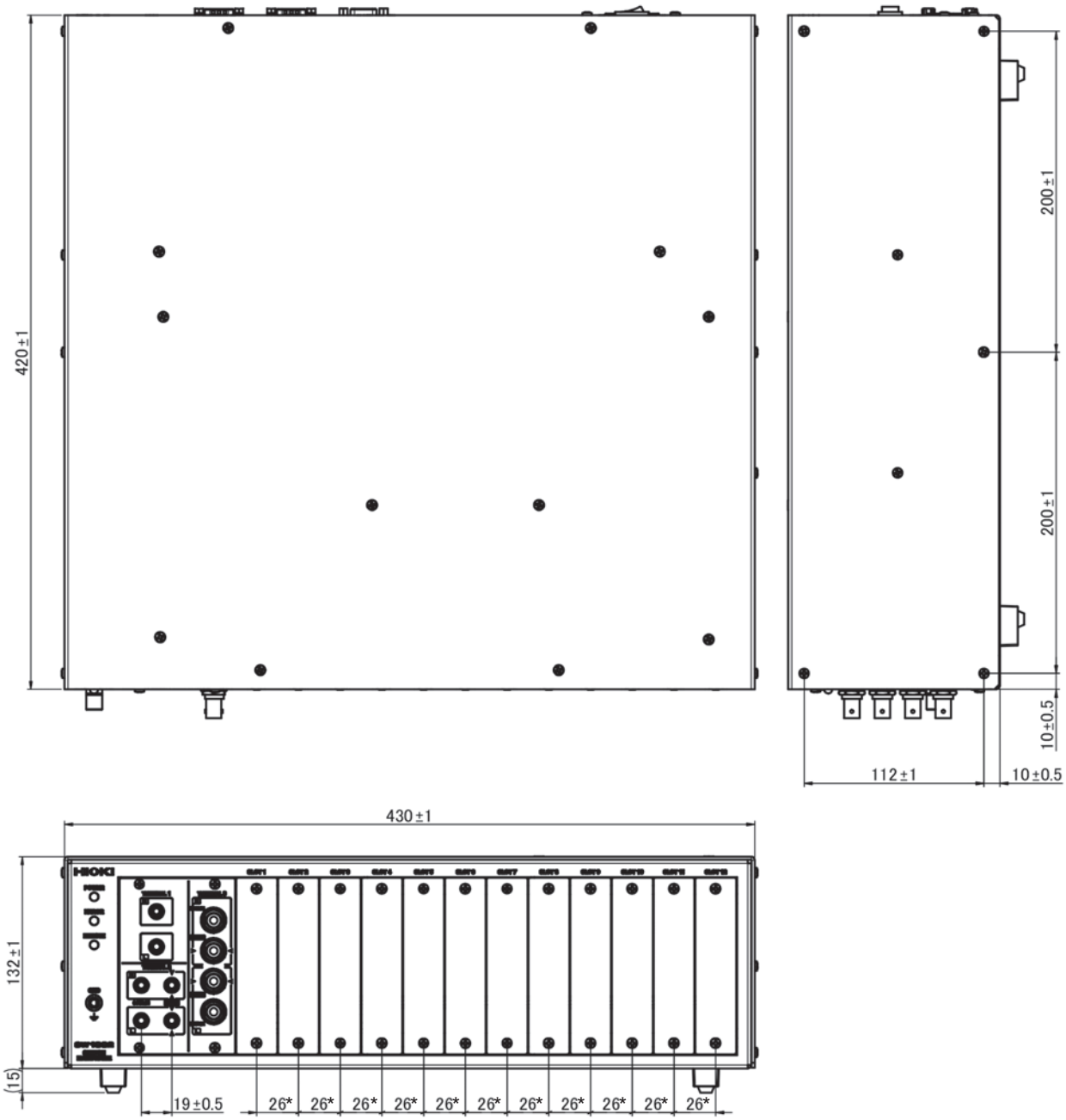

*: Tolerance ±0.2

13 License Information

The device (Hioki SW1001, SW1002) uses lwIP open-source software.

lwIP's License

lwIP is licenced under the BSD licence:

Copyright (c) 2001-2004 Swedish Institute of Computer Science.
All rights reserved.

Redistribution and use in source and binary forms, with or without modification, are permitted provided that the following conditions are met:

1. Redistributions of source code must retain the above copyright notice, this list of conditions and the following disclaimer.
2. Redistributions in binary form must reproduce the above copyright notice, this list of conditions and the following disclaimer in the documentation and/or other materials provided with the distribution.
3. The name of the author may not be used to endorse or promote products derived from this software without specific prior written permission.

THIS SOFTWARE IS PROVIDED BY THE AUTHOR ``AS IS AND ANY EXPRESS OR IMPLIED WARRANTIES, INCLUDING, BUT NOT LIMITED TO, THE IMPLIED WARRANTIES OF MERCHANTABILITY AND FITNESS FOR A PARTICULAR PURPOSE ARE DISCLAIMED. IN NO EVENT SHALL THE AUTHOR BE LIABLE FOR ANY DIRECT, INDIRECT, INCIDENTAL, SPECIAL, EXEMPLARY, OR CONSEQUENTIAL DAMAGES (INCLUDING, BUT NOT LIMITED TO, PROCUREMENT OF SUBSTITUTE GOODS OR SERVICES; LOSS OF USE, DATA, OR PROFITS; OR BUSINESS INTERRUPTION) HOWEVER CAUSED AND ON ANY THEORY OF LIABILITY, WHETHER IN CONTRACT, STRICT LIABILITY, OR TORT (INCLUDING NEGLIGENCE OR OTHERWISE) ARISING IN ANY WAY OUT OF THE USE OF THIS SOFTWARE, EVEN IF ADVISED OF THE POSSIBILITY OF SUCH DAMAGE.

Index

Number

10BASE-T 60
100BASE-TX 60

A

Analog bus 11

B

Backup 47
Blank panel 15
Block diagram 10
Bus relay 11

C

Channel delay 37
Channel relay 11
Command 71
Command forwarding function 101
Command syntax 72
Communication command port No. 62
Communication setting mode 22, 59
Communication setting mode switch 9
Connect
  Connection cable 19
  Measurement cable 18
  Power cord 23
Connection cable 11, 19
Connection method 11
Connector wiring diagram (SW9001, 2-wire) 136
Connector wiring diagram (SW9001, 4-wire) 137
Connector wiring diagram (SW9002) 143
CR 73
CR+LF 73

D

Delay time 37
DFLT 22
Dimensions
  Device 119
  Module 129, 139

E

End channel 40
ERROR 126
Error display and troubleshooting 126
Error information 100
Error number 127
Ethernet 60
Event Registers 77
External control 49
External trigger 39
EXT. I/O MODE 9, 50
EXT. I/O MODE change-over switch 9, 50
EXT. I/O terminal 9

F

Filter function 102
Fixed setting mode 22
Fuse 151

G

Gateway 62
Glossary 11
Grounding 49

H

Header 72
HOST RS-232C 66

I

Initialization 47
Initialization settings 47
Input buffer 76
Input signal 52
Inspection before measurement 25
Installation 64
INSTRUMENT RS-232C 70
Internal circuit configuration 55
  Connection examples 57
  Electrical specifications 56
IP address 62
Isolated power supply output 52

L

LAN interface 60

M

Mass
  Device 119
  Module 129, 139
Maximum input voltage 120
Measurement cable 11, 18
Measurement flowchart 12
Message terminator 73
Module information 45, 105

N

Network 60
NPN 49, 50
NPN/PNP 50
NRf 74
Number of slots 120

O

Options 2
Outline drawings 158
Output queue 76
Output signal 52

P

PNP 49, 50
Port No. 62
Power supply
  Off 23
  On 23
Power switch 9

Q

Query 71

R

Rack mount 152
Relay contact welding 26
Relay opening/closing frequency 45, 106, 138, 144
Relay operation time 36
Remote state 86
Repair 128
Replacement parts 128
Response message 72
RS-232C connector 9
RS-232C interface 66

S

Sample program 107
Scan 11
Scan list 40
SCAN_RESET signal 42
SCAN signal 41
Self-test 23
Separator 73
Settling time 36
Sinking current (NPN) 50
Sinking current output 49
Sourcing current output 49
Sourcing current (PNP) 50
Specifications 119
Standard Event Status Register 80
Start channel 40
Status Byte Register 77
Subnet mask 62
Switching wiring diagram (SW9001) 135
Switching wiring diagram (SW9002) 142
Synchronized command 92

T

Terminal 11
TERMINAL 1 20
TERMINAL 2 20
TERMINAL 3 21
Timing chart 53

U

Uninstallation 64
USB driver 64
USB interface 64
USER 22
User setting mode 22

Warranty Certificate

HIOKI

Model	Serial number	Warranty period Three (3) years from date of purchase (___ / ___)

Customer name: _____

Customer address: _____

Important

- Please retain this warranty certificate. Duplicates cannot be reissued.
- Complete the certificate with the model number, serial number, and date of purchase, along with your name and address. The personal information you provide on this form will only be used to provide repair service and information about Hioki products and services.

This document certifies that the product has been inspected and verified to conform to Hioki's standards.
Please contact the place of purchase in the event of a malfunction and provide this document, in which case Hioki will repair or replace the product subject to the warranty terms described below.

Warranty terms

1. The product is guaranteed to operate properly during the warranty period (three [3] years from the date of purchase). If the date of purchase is unknown, the warranty period is defined as three (3) years from the date (month and year) of manufacture (as indicated by the first four digits of the serial number in YYMM format).
2. If the product came with an AC adapter, the adapter is warrantied for one (1) year from the date of purchase.
3. The accuracy of measured values and other data generated by the product is guaranteed as described in the product specifications.
4. In the event that the product or AC adapter malfunctions during its respective warranty period due to a defect of workmanship or materials, Hioki will repair or replace the product or AC adapter free of charge.
5. The following malfunctions and issues are not covered by the warranty and as such are not subject to free repair or replacement:
   - -1. Malfunctions or damage of consumables, parts with a defined service life, etc.
   - -2. Malfunctions or damage of connectors, cables, etc.
   - -3. Malfunctions or damage caused by shipment, dropping, relocation, etc., after purchase of the product
   - -4. Malfunctions or damage caused by inappropriate handling that violates information found in the instruction manual or on precautionary labeling on the product itself
   - -5. Malfunctions or damage caused by a failure to perform maintenance or inspections as required by law or recommended in the instruction manual
   - -6. Malfunctions or damage caused by fire, storms or flooding, earthquakes, lightning, power anomalies (involving voltage, frequency, etc.), war or unrest, contamination with radiation, or other acts of God
   - -7. Damage that is limited to the product's appearance (cosmetic blemishes, deformation of enclosure shape, fading of color, etc.)
   - -8. Other malfunctions or damage for which Hioki is not responsible
6. The warranty will be considered invalidated in the following circumstances, in which case Hioki will be unable to perform service such as repair or calibration:
   - -1. If the product has been repaired or modified by a company, entity, or individual other than Hioki
   - -2. If the product has been embedded in another piece of equipment for use in a special application (aerospace, nuclear power, medical use, vehicle control, etc.) without Hioki's having received prior notice
7. If you experience a loss caused by use of the product and Hioki determines that it is responsible for the underlying issue, Hioki will provide compensation in an amount not to exceed the purchase price, with the following exceptions:
   - -1. Secondary damage arising from damage to a measured device or component that was caused by use of the product
   - -2. Damage arising from measurement results provided by the product
   - -3. Damage to a device other than the product that was sustained when connecting the device to the product (including via network connections)
8. Hioki reserves the right to decline to perform repair, calibration, or other service for products for which a certain amount of time has passed since their manufacture, products whose parts have been discontinued, and products that cannot be repaired due to unforeseen circumstances.

HIOKI E.E. CORPORATION
http://www.hioki.com
18-07 EN-3

HIOKI

www.hioki.com/

All regional contact information

HIOKI E.E. CORPORATION
81 Koizumi, Ueda, Nagano 386-1192 Japan

2402 EN

Edited and published by HIOKI E.E. CORPORATION Printed in Japan

・Contents subject to change without notice.
・This document contains copyrighted content.
・It is prohibited to copy, reproduce, or modify the content of this document without permission.
・Company names, product names, etc. mentioned in this document are trademarks or registered trademarks of their respective companies.

Europe only

・EU declaration of conformity can be downloaded from our website.
・Contact in Europe: HIOKI EUROPE GmbH
Helfmann-Park 2, 65760 Eschborn, Germany hioki@hioki.eu