HIOKI

Communication Command Instruction Manual

PW3336(-01,-02,-03)
PW3337(-01,-02,-03)
Power Meter

- ✓ This manual explains the communication commands for the above Power Meter models only.
- ✓ Please refer to the instruction manual for your Power Meter for details regarding command settings.(Chapter 4 “Connection to a PC”)
- ✓ Although all reasonable care has been taken in the production of this manual, should you find any points which are unclear or in error, please contact your local distributor or the HIOKI International Sales & Marketing Division at os-com@hioki.co.jp.
- ✓ In the interest of product development, the contents of this manual may be subject to revision without notice.
- ✓ Unauthorized reproduction or copying of this manual is prohibited.
- ✓ Be sure to review the Instruction Manual for your Power Meter before using the instrument.

PW3336A987-01

Contents

1 Introduction 1
Message Format 2
Output Queue and Input Buffer 5
Status Byte Register 6
Event Registers 8
Initialization Items 13
Command Execution Time 14
Errors During Communications 14
2 Message List 15
Standard Commands 15
Device-specific Commands (Event Registers) 15
Device-specific Commands (Measurement Settings) 16
Device-specific Commands (Voltage Range) 16
Device-specific Commands (Current Range) 17
Device-specific Commands (Frequency Range [Zero-crossing Filter]) 18
Device-specific Commands (Synchronization Source) 18
Device-specific Commands (VT/CT Ratio) 19
Device-specific Commands (D/A Output) 20
Device-specific Commands (Instrument Display Settings) 21
Device-specific Commands (Measurement Value Output) 22
Device-specific Commands (Measurement Value Output Settings [Harmonic Wave]) 29
Device-specific Commands (Communications) 32
3 Message Reference 33
Message Reference Interpretation 33
Standard Commands 34
(1) System Data Command 34
(2) Internal Operation Command 34
(3) Synchronization Commands 35
(4) Status and Event Control Commands 36
Device-specific Commands 38
(1) Event Status Register 38
(2) Measurement Settings 40
(3) Voltage Range 44
(4) Current Range 46
(5) Frequency Range (Zero-crossing Filter) 49
(6) Synchronization Source 50
(7) VT Ratio/CT Ratio 51
(8) D/A output 53
(9) Instrument Display Settings 55
(10) Measurement Value Output 60
(11) Communications Settings 103
(12) Status-dependent Commands (Common Commands) 108
(13) Status-dependent Commands (Device-specific Commands) 109
4 Operation Problems (Communications) 113
5 Device Documentation Requirements GP-IB 115

1 Introduction

This manual is for Power Meter models PW3336(-01, -02, -03) and PW3337(-01, -02, -03).

Messages are provided in the interface to control the Power Meter.
There are two types of messages: program messages that are sent from the controller (such as a computer) to the Power Meter and response messages that are sent from the Power Meter to the controller.
There are also execution confirmation messages for synchronization with the controller in the RS-232C interface.

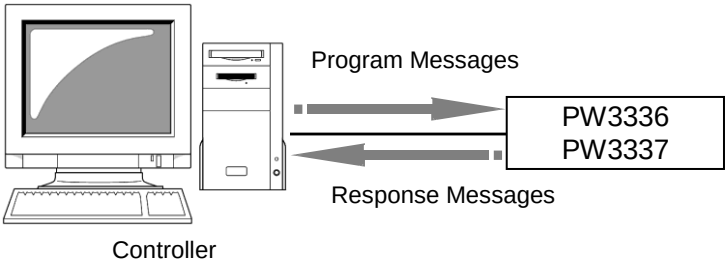

Message types are further categorized as follows.

- Messages
  - Program Messages
    - Command Messages
    - Query Messages
  - Response Messages
  - Execution Confirmation Messages RS-232C

When issuing commands that contain data, make sure that the data is provided in the specified format.

When connecting via LAN, connect to TCP/IP port 3300. LAN

NOTE

During communication the Power Meter will enter the Remote state and the **REMOTE Indicator** on the unit will turn ON.
When this occurs, all operation keys except for **SHIFT(EXIT/LOCAL)** will be disabled.

However, if the Power Meter is in the Local Lock Out state via GP-IB (GP-IB command LLO:Local Lock Out -> P.12), the **SHIFT(EXIT/LOCAL) Key** will also be disabled. If this occurs, execute the GTL (Go To Local) interface function or turn the Power Meter OFF and ON again to return to the Local state.

If the Power Meter enters the Remote state when on the settings screen, it will automatically change to the measurement display.

Message Format

Program Messages

Program messages can be either Command Messages or Query Messages.

(1) Command Messages

Instructions to control the instrument, such as to change settings or reset

Example: Instruction to set the voltage range (ch1).

:VOLTAGE1:RANGE _ 300

Header portion Space Data portion

(2) Query Messages

Requests for responses relating to results of operation or measurement, or the state of instrument settings

Example: Request for the current measurement range

:VOLTAGE1:RANGE?

Header portion Question mark

See: "Headers (p. 2)", "Separators (p. 3)", "Data Formats (p.4)"

Response Messages

When a query message is received, its syntax is checked and a response message is generated.-
The :HEADer command determines whether headers are prefixed to response messages.

Header ON	**:VOLTAGE1:RANGE 300**
Header OFF	**300**
	(The current voltage range for ch1 is 300 V.)

At power-on, Header ON is selected.
If an error occurs when a query message is received, no response message is generated for that query.

Command Syntax

Command names are chosen to mnemonically represent their function, and can be abbreviated. The full command name is called the “long form”, and the abbreviated name is called the “short form”. The command references in this manual indicate the short form in upper-case letters, extended to the long form in lower case letters, although the commands are not case-sensitive in actual usage.

DISPLAY?	OK (long form)
DISP?	OK (short form)
DISPL?	Error
DIS?	Error

Response messages generated by the instrument are in long form and in upper case letters.

Headers

Headers must always be prefixed to program messages.

(1) Command Program Headers

There are three types of commands: Simple, Compound, and Standard.

- Headers for Simple Commands

  This header type is a sequence of letters and digits.

  :ESE0

- Headers for Compound Commands

  These headers consist of multiple simple command type headers separated by colons ":".

  :VOLTage1:RANGE

• Headers for Standard Commands

This header type begins with an asterisk "*", indicating that it is a standard command defined by IEEE 488.2.

***RST**

(2) Query Program Header

These commands are used to query the instrument about the results of operations, measured values, and the current states of instrument settings.

As shown in the following examples, a query is formed by appending a question mark **?** after a program header.

:HOLD?

:VOLTage:RANGe?

Characters within square brackets [ ] may be omitted.

:MEASure[:NORMAL]:VALue? → Either form is valid **:MEASure:VALue?**

Message Terminators

The instrument recognizes the following message terminators (delimiters):

GP-IB
- LF
- CR+LF
- EOI
- LF with an EOI

RS-232C / LAN
- CR
- CR+LF

Depending on the instrument's interface settings, the following can be selected as the terminator for response messages.

For information on settings, see "Terminator Setting" (p. 107).

GP-IB
- LF with an EOI
- CR+ LF with an EOI (default)

RS-232C / LAN
- LF
- CR+LF (default)

Separators

(1) Message Unit Separator

Multiple messages can be written in one line by separating them with semicolons ";".

:VOLTage1:RANGe 300;:AVERaging 10

• When messages are combined in this way and if one command contains an error, all subsequent messages up to the next terminator will be ignored.

(2) Header Separator

In a message consisting of both a header and data, the header is separated from the data by a space " " (ASCII code 20H).

: VOLTage1: RANGe 300

(3) Data Separator

In a message containing multiple data items, commas are required to separate the data items from one another.

:MEASure? U1, I1

Data Formats

The instrument uses character data, decimal numeric data and character string data depending on the command.

(1) Character Data

Character data always begins with an alphabetic character, and subsequent characters may be either alphabetic or numeric. Character data is not case-sensitive, although response messages from the instrument are only upper case. When the command data portion contains <1/0/ON/OFF>, the operation will be the same as when 0 is OFF and 1 is ON.

:HEADER OFF

(2) Decimal Numeric Data

Three formats are used for numeric data: NR1, NR2 and NR3. Numeric values may be signed or unsigned. Unsigned numeric values are handled as positive values. Values exceeding the precision handled by the instrument are rounded to the nearest valid digit.

- NR1 Integer data (e.g.: +12, -23, 34)
- NR2 Fixed-point data (e.g.: +1.23, -23.45, 3.456)
- NR3 Floating-point exponential representation data (e.g.: +1.0E-2, -2.3E+4)

The term “NRf format” includes all three of the above numeric decimal formats.
The instrument accepts NRf format data. The format of response data is specified for each command, and the data is sent in that format.

:AVERAGING 10

GP-IB The instrument does not completely support IEEE 488.2. Use referenced data whenever possible. Also be careful not to overflow the input buffer or output queue with a single command.

Compound Command Header Omission

When several commands having a common header are combined to form a compound command (for example, **:VOLTage1:AUTO** and **:VOLTage1:RANGe**), if they are written together in sequence, the common portion (here, **:VOLTage1:**) can be omitted after its initial occurrence.
This common portion is called the “current path” (analogous to the path concept in computer file storage), and until it is cleared, the interpretation of subsequent commands presumes that they share the same common portion.

This usage of the current path is shown in the following example:

Full expression

:VOLTage1:AUTO OFF;:VOLTage1:RANGe 300

Compacted expression

:VOLTage1:AUTO OFF;RANGe 300

The current path allows you to abbreviate the next command.

The current path is cleared when the power is turned on, when reset by key input, by a colon “:” at the start of a command, and when a message terminator is detected.
Standard command messages can be executed regardless of the current path. They have no effect upon the current path.

A colon “:” is not required at the start of the header of a Simple or Compound command. However, to avoid confusion with abbreviated forms and operating mistakes, we recommend always placing a colon at the start of a header.

Output Queue and Input Buffer

Output Queue

Response messages are stored in the output queue until read by the controller. The output queue is also cleared in the following circumstances:

- Power on
- Device clear GP-IB
- Query error

The output queue capacity of the instrument is 4,096 bytes. If response messages overflow the buffer, a query error is generated and the output queue is cleared.

Input Buffer

The input buffer capacity of the instrument is 1,024 bytes.
If 1,024 bytes are allowed to accumulate in this buffer so that it becomes full, the GP-IB interface bus enters the waiting state until space is cleared in the buffer.
The RS-232C and LAN interfaces will not accept data beyond 1,024 bytes.

Note: Ensure that the length of a single line never exceeds 1,024 bytes.

Status Byte Register

The instrument uses the status model defined by the IEEE 488.2 standard for items related to serial polling via the service request function.
Events are what trigger service requests.

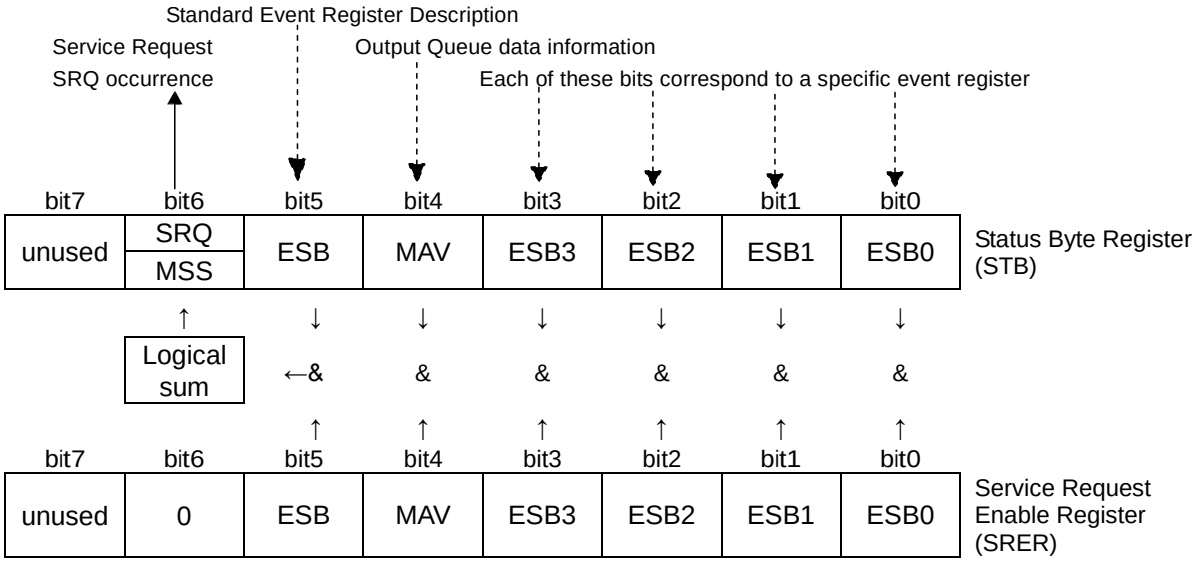

Overview of Service Request Occurrence

The Status Byte Register contains information about the event registers and the output queue. Required items are selected from this information by masking with the Service Request Enable Register.
When any bit selected by the mask is set, bit 6 (MSS; the Master Summary Status) of the Status Byte Register is also set, which generates an SRQ (Service Request) message and dispatches a service request.

SRQs (Service Requests) can be used only with the GP-IB interface.
However, SRER setting (***SRE?**) and STB read (***STB?**) queries can be used even with the RS-232C and LAN interfaces.

Status Byte Register (STB)

During serial polling, the contents of the 8-bit Status Byte Register are sent from the instrument to the controller. When any Status Byte Register bit enabled by the Service Request Enable Register has switched from 0 to 1, the MSS bit becomes 1. Consequently, the SRQ bit is set to 1, and a service request is dispatched.

The SRQ bit is always synchronous with service requests, and is read and simultaneously cleared during serial polling. Although the MSS bit is only read by an ***STB?** query, it is not cleared until a clear event is initiated by the ***CLS** command.

Bit 7		unused
Bit 6	SRQ	Set to 1 when a service request is dispatched.
	MSS	This is the logical sum of the other bits of the Status Byte Register.
Bit 5	ESB	Standard Event Status (logical sum) bit This is the logical sum of the Standard Event Status Register.
Bit 4	MAV	Message available Indicates that a message is present in the output queue.
Bit 3	ESB3	Event Summary (logical sum) bit 3 This is the logical sum of Event Status Register 3.
Bit 2	ESB2	Event Summary (logical sum) bit 2 This is the logical sum of Event Status Register 2.
Bit 1	ESB1	Event Summary (logical sum) bit 1 This is the logical sum of Event Status Register 1.
Bit 0	ESB0	Event Summary (logical sum) bit 0 This is the logical sum of Event Status Register 0.

Service Request Enable Register (SRER)

Setting a bit of this register to 1 enables the corresponding bit of the Status Byte Register to be used.

Event Registers

Standard Event Status Register (SESR)

The Standard Event Status Register is an 8-bit register.
If any bit in the Standard Event Status Register is set to 1(after masking by the Standard Event Status Enable Register), bit 5 (ESB) of the Status Byte Register is set to 1.

See: “Standard Event Status Enable Register (SESER)” (p. 9)

The Standard Event Status Register is cleared in the following situations:
• When a ***CLS** command is executed
• When an event register query (***ESR?**) is executed
• When the instrument is powered on

Bit 7	PON	**Power-On Flag** Set to 1 when the power is turned on, or upon recovery from an outage.
Bit 6	URQ	**User Request** unused
Bit 5	CME	**Command error (The command to the message terminator is ignored.)** This bit is set to 1 when a received command contains a syntactic or semantic error: • Program header error • Incorrect number of data parameters • Invalid parameter format • Received a command not supported by the instrument
Bit 4	EXE	**Execution Error** This bit is set to 1 when a received command cannot be executed for some reason. • The specified data value is outside of the set range • The specified data cannot be set (data format discrepancy) • Execution is prevented by some other operation being performed
Bit 3	DDE	**Device-dependent Error** This bit is set to 1 when a command cannot be executed due to some reason other than a command error, a query error or an execution error. • An internal error occurred and execution cannot be performed (error displayed) • A command was received that cannot be executed during a restricted operation (integration, hold, etc.) • When "o.r","S.Err” or ”-----“ occurs and the error data is read by a *MEASure? query.
Bit 2	QYE	**Query Error (the output queue is cleared)** This bit is set to 1 when a query error is detected by the output queue control. • When an attempt is made to read the output queue when the output queue is empty (GP-IB only) • When the data overflows the output queue • When the next command is received while there is data in the output queue • When there is a query after a *IDN? on the same line.
Bit 1	RQC (unused)	**Request Control**
Bit 0	OPC	**Operation Complete** This bit is set to 1 in response to an *OPC command. • It indicates the completion of operations of all messages up to the ***OPC** command

Standard Event Status Enable Register (SESER)

Setting any bit of the Standard Event Status Enable Register to 1 enables access to the corresponding bit of the Standard Event Status Register.

Standard Event Status Register (SESR) and Standard Event Status Enable Register (SESER)

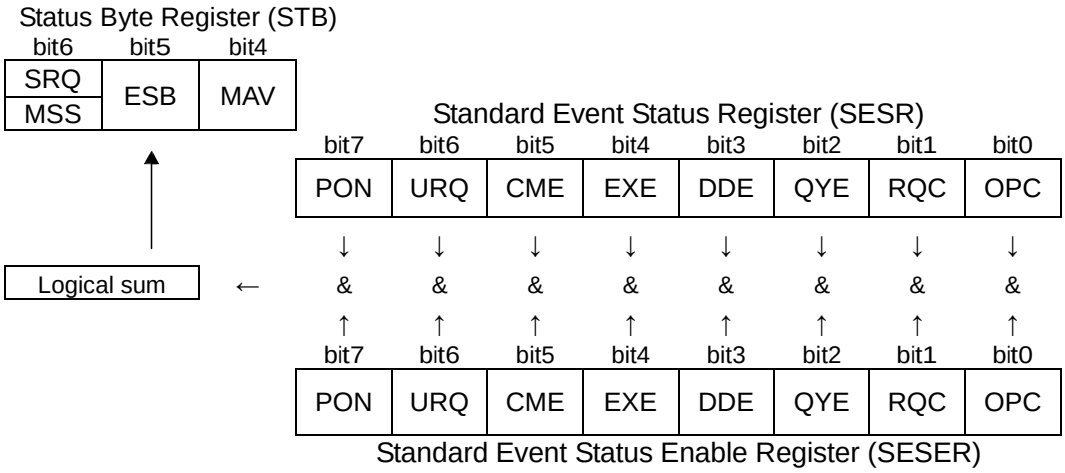

Device-specific Event Status Registers (ESR0, ESR1, ESR2, and ESR3)

This instrument provides four Event Status Registers for controlling events.
Each event register is an 8-bit register.

When any bit in one of these Event Status Registers enabled by its corresponding Event Status Enable Register is set to 1, the following happens:

- For Event Status Register 0, bit 0 (ESB0) of the Status Byte Register (STB) is set to 1.
- For Event Status Register 1, bit 1 (ESB1) of the Status Byte Register (STB) is set to 1.
- For Event Status Register 2, bit 2 (ESB2) of the Status Byte Register (STB) is set to 1.
- For Event Status Register 3, bit 3 (ESB3) of the Status Byte Register (STB) is set to 1.

Event Status Registers 0 through 3 are cleared in the following situations:

- When a ***CLS** command is executed
- When an Event Status Register query (**:ESR0?**, **:ESR1?**, **:ESR2?**, or **:ESR3?**) is executed
- When the instrument is powered on

Event Status Register 0 (ESR0)		
Bit 7	**D**ata**S**et	Data updated.
Bit 6	**C**hange **S**etting **E**rr	Data became invalid due to a hardware-related setting change. (For example, immediately after the range was changed.)
Bit 5	**S**ync**E**rr	A synchronization error occurred on ch1, ch2, or ch3.
Bit 4	**I**ntegrate**E**nd	Integration has completed.
Bit 3	**AV**era**G**e update	Averaged data updated.
Bit 2	**H**IGH-**P**sum	The total (sum) of the active power is o.r. (over range).
Bit 1	**O**ver**D**ata**I**ntegrate	A peak overflow of voltage or current occurred in the active power integration value for total(sum).
Bit 0	**E**xt.**S**ync **E**rror	Failed external synchronization for the data update.

Event Status Register 1 (ESR1)		
Bit 7	**F**requency **O**ut of **R**ange**1**	The frequency of ch1 (voltage or current) is invalid.
Bit 6	**O**ver **D**ataIntegrate**1**	A peak overflow of voltage or current occurred in the active power integration value for ch1.
Bit 5	**C**urrent**O**ver **D**ata**I**ntegrate**1**	A peak overflow of current occurred in the current integration value for ch1.
Bit 4	**O**ver-**I1**	A peak overflow occurred in the current input on ch1.
Bit 3	**O**ver-**U1**	A peak overflow occurred in the voltage input on ch1.
Bit 2	**H**igh-**P1**	The active power of ch1 is over range.
Bit 1	**H**igh-**I1**	The current of ch1 is over range.
Bit 0	**H**igh-**U1**	The voltage of ch1 is over range.

Event Status Register 2 (ESR2)		
Bit 7	**F**requency **O**ut of **R**ange**2**	The frequency of ch2 (voltage or current) is invalid.
Bit 6	**O**ver **D**ataIntegrate**2**	A peak overflow of voltage or current occurred in the active power integration value for ch2.
Bit 5	**C**urrent**O**ver **D**ata**I**ntegrate**2**	A peak overflow of current occurred in the current integration value for ch2.
Bit 4	**O**ver-**I2**	A peak overflow occurred in the current input on ch2.
Bit 3	**O**ver-**U2**	A peak overflow occurred in the voltage input on ch2.
Bit 2	**H**igh-**P2**	The active power of ch2 is over range.
Bit 1	**H**igh-**I2**	The current of ch2 is over range.
Bit 0	**H**igh-**U2**	The voltage of ch2 is over range.

Event Status Register 3 (ESR3)		
Bit 7	**F**requency **O**ut of **R**ange**3**	The frequency of ch3 (voltage or current) is invalid.
Bit 6	**O**ver **D**ataIntegrate**3**	A peak overflow of voltage or current occurred in the active power integration value for ch3.
Bit 5	**C**urrent**O**ver **D**ata**I**ntegrate**3**	A peak overflow of current occurred in the current integration value for ch3.
Bit 4	**O**ver-**I3**	A peak overflow occurred in the current input on ch3.
Bit 3	**O**ver-**U3**	A peak overflow occurred in the current input on ch3.
Bit 2	**H**igh-**P3**	The active power of ch3 is over range.
Bit 1	**H**igh-**I3**	The current of ch3 is over range.
Bit 0	**H**igh-**U3**	The voltage of ch3 is over range.

Event Status Register 0 to 3 (ESR0 to ESR3) and
Event Status Enable Register 0 to 3 (ESER0 to ESER3)

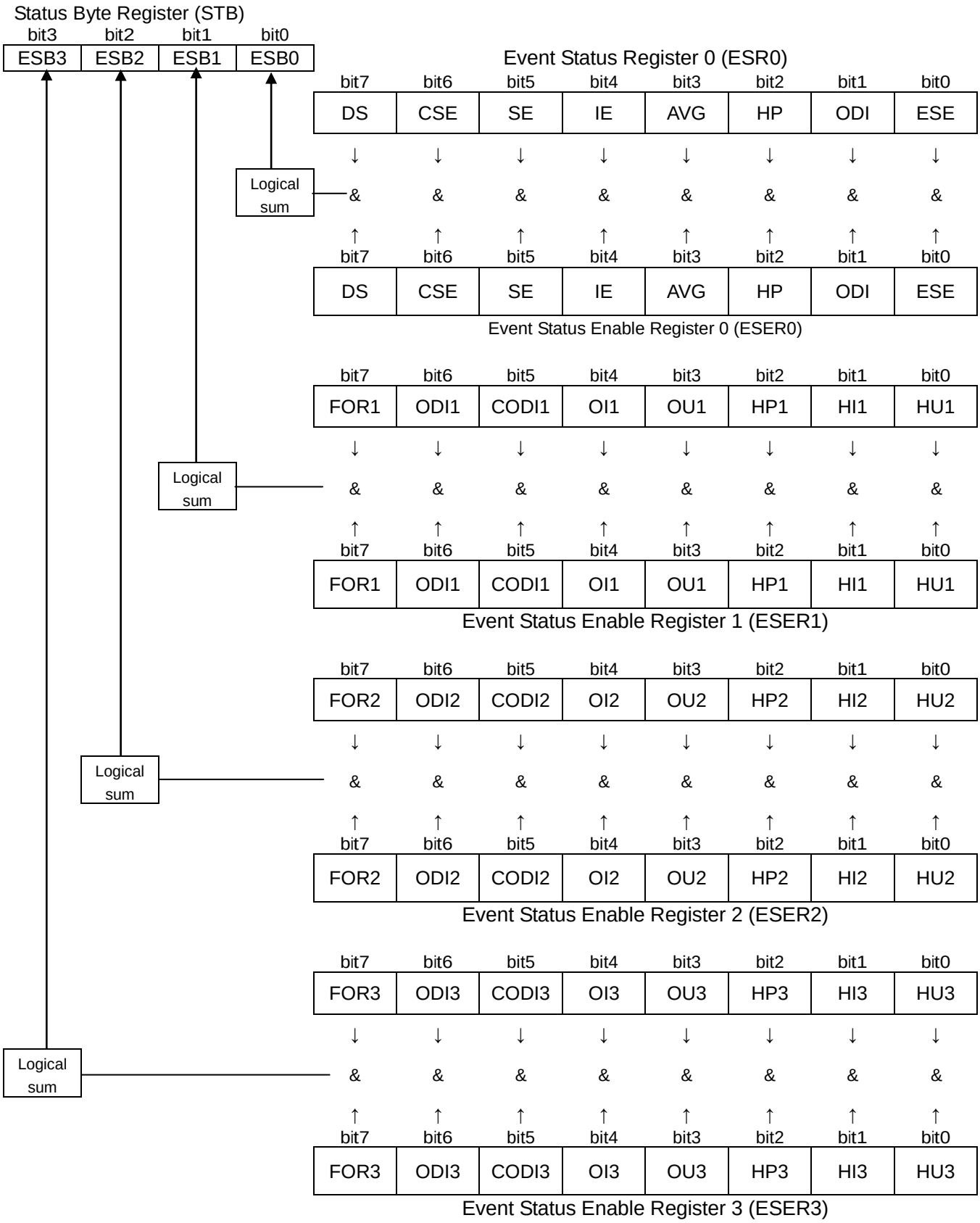

Register Reading and Writing

Register	Read	Write
Status Byte Register	*STB?	-
Service Request Enable Register	*SRE?	*SRE
Standard Event Status Register	*ESR?	-
Standard Event Status Enable Register	*ESE?	*ESE
Event Status Register 0	:ESR0?	-
Event Status Enable Register 0	:ESE0?	:ESE0
Event Status Register 1	:ESR1?	-
Event Status Enable Register 1	:ESE1?	:ESE1
Event Status Register 2	:ESR2?	-
Event Status Enable Register 2	:ESE2?	:ESE2
Event Status Register 3	:ESR3?	-
Event Status Enable Register 3	:ESE3?	:ESE3

GP-IB Commands

The following commands can be used through interface functions.

Command	Description	
GTL	**G**o **T**o **L**ocal	Changes the instrument from the Remote state to the Local state.
LLO	**L**ocal **L**ock **O**ut	Locks all keys on the instrument, including the Local Key.
DCL	**D**evice **CL**ear	Clears the input buffer and output queue.
SDC	**S**elected **D**evice **C**lear	Clears the input buffer and output queue.
GET	**G**roup **E**xecute **T**rigger	Updates the displayed value while it is being held.

Initialization Items

Item / Initialization Method	At Power-on	System Reset	*RST Command	Device Clear (GP-IB only)	*CLS Command	Factory Default
GP-IB address	-	-	-	-	-	1
RS-232C setting (baud rate)	-	-	-	-	-	38400
LAN setting	-	-	-	-	-	*4
Device-specific functions (range, etc.)	-	●	●	-	-	*4
Output Queue	●	●	-	●	-	●
Input Buffer	●	●	-	●	-	●
Status Byte Register	●	●	-	-*1	●*2	●
Event registers	●*3	●	-	-	●	●
Enable register	●	●	-	-	-	0
Current path	●	●	-	●	-	●
Headers on/off	●	●	●	-	-	ON
Output items	●	●	●			*5,
Response message terminator	●	●	-	-	-	CR+LF
Response message separator	●	●	●	-	-	;

*1. Only the MAV bit (bit 4) is cleared.
*2. All bits except the MAV bit are cleared.
*3. Except the PON bit (bit 7).
*4. Refer to the user's manual for the instrument.
*5. See below.

Output Item Initialization

Measurement Item / ch	CH1	CH2	CH3 (PW3337 only)	sum
:MEASure?				
Voltage (U)	○	○	○	○
Current (I)	○	○	○	○
Active power (P)	○	○	○	○
Apparent power (S)	○	○	○	○
Reactive power (Q)	○	○	○	○
Power factor (PF)	○	○	○	○
Phase angle (DEG)	○	○	○	○
Voltage frequency (FREQU)	○	○	○	
Current frequency (FREQI)	○	○	○	
:MEASure:HARMonic?				
Harmonic wave voltage effective value (HU)	○ (first-order only)	○ (first-order only)	○ (first-order only)	○ (first-order only)
Harmonic wave current effective value (HU)	○ (first-order only)	○ (first-order only)	○ (first-order only)	○ (first-order only)
Harmonic wave power effective value (HU)	○ (first-order only)	○ (first-order only)	○ (first-order only)	○ (first-order only)

Output for all items other than those listed above is OFF by default.

Command Execution Time

Command execution time indicates the time for analyzing and processing long form commands.
However, the command execution time for commands with data is the time described according to the data format specified in the <data portion>, and for query commands it is the time when the header is ON.

- The instrument performs measurements, calculations, and updates the display repeatedly in 200 ms cycles. Measurements and calculations are given priority over command processing, and require a maximum of 150 ms. Therefore, a maximum delay of 150 ms may be encountered from the time a command is received until analysis begins.

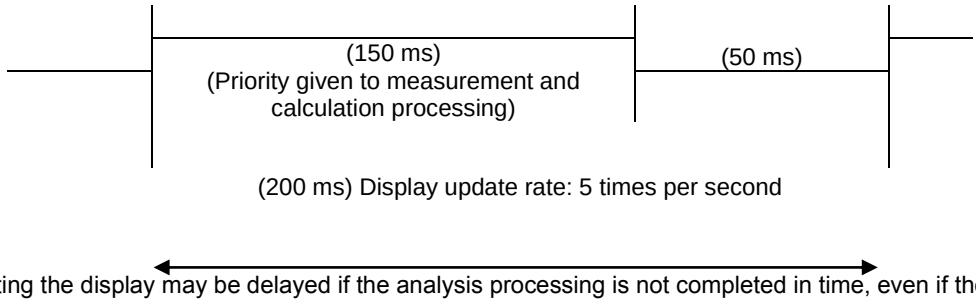

• Updating the display may be delayed if the analysis processing is not completed in time, even if the internal processing time is met.
• All commands are sequential.
• When communicating with a controller, the time required to transfer the data must be added.
The amount of time required for the data transfer depends on the controller (communications).
The RS-232C transfer time for a starting bit, data length of 8, no parity bit, and a stop bit (10 bits total) with a baud rate setting of N bps is calculated as follows:
Transfer Time T [1 character/second] = Baud Rate N [bps] / 10 [bits]
The measurement value is 11 characters so the time required to transfer one piece of data would be 11/T.
(Example) 9600 bps: 11 / (9600 / 10) = 11 ms (approximately)
• Wait a few moments after making any changes via setting commands to allow the measurements to stabilize.

Command	Execution time (excluding communication time and delays to the start of analysis)
***WAI**	200ms or less
The other commands	10 ms or less

Errors During Communications

An error occurs when messages are executed in the following cases:
• Command Error
When message syntax (spelling) is invalid
When the data format in a command or query is invalid
• Query Error
When the response message exceeds 4,000 bytes
When there is a query after an *IDN? query
• Execution Error
When invalid character or numeric data is present
• Device-dependent Error
When an error occurs during self-testing
When a restricted operation (such as changing the range) is attempted during an integration operation (when the INTEGRATOR indicator is lit or flashing)
When a restricted operation (such as changing the range) is attempted during the Hold state
When the *TRG command is executed in any state other than the Hold state

Note:
A command error will always occur if a message is spelled incorrectly or if any data is present after a query.
When an error occurs with a query, no response message will be generated for that query.

2 Message List

The information in angled brackets < > represents the data format.
When the GP-IB interface is used, you can send an SRQ interrupt to the controller by setting the Event Status Register and *SRE.

Standard Commands

Message	Data Formats (Response data for queries)	Description	Reference Page
***CLS**	————	Clears the event registers and the Status Byte Register.	36
***ESE** ***ESE?**	0 to 255	Sets/Queries the Standard Event Status Enable Register.	36
***ESR?**	0 to 255	Queries the Standard Event Status Register.	36
***IDN?**	<Manufacturer name>, <Model name>, <Model type>, <Software version> <Serial number>	Queries the Device ID.	34
***OPC**	————	Sets bit 0 of the Standard Event Status Register to 1 after an operation completes.	35
***OPC?**	1	Queries execution completion.	35
***OPT?**	————	Queries the device options.	34
***RST**	————	Initializes the device.	34
***SRE** ***SRE?**	0 to 127	Sets/Queries the Service Request Enable Register.	37
***STB?**	0 to 127	Queries the Status Byte Register.	37
***TRG**	————	Updates the display once.	37
***TST?**	0 to 4	Initiates a self-test and queries the result.	35
***WAI**	————	Waits until the next display update completes.	35

Device-specific Commands (Event Registers)

Message	Data Formats (Response data for queries)	Description	Reference Page
:ESE0 **:ESE0?**	0 to 255	Sets/Queries Event Status Enable Register 0.	38
:ESR0?	(0 to 255)	Queries Event Status Register 0.	39
:ESE1 **:ESE1?**	0 to 255	Sets/Queries Event Status Enable Register 1.	38
:ESR1?	(0 to 255)	Queries Event Status Register 1.	39
:ESE2 **:ESE2?**	0 to 255	Sets/Queries Event Status Enable Register 2.	39
:ESR2?	(0 to 255)	Queries Event Status Register 2.	39
:ESE3 **:ESE3?**	0 to 255	Sets/Queries Event Status Enable Register 3.	39
:ESR3?	(0 to 255)	Queries Event Status Register 3.	39

Device-specific Commands (Measurement Settings)

Message	Data Formats (Response data for queries)	Description	Reference Page
:WIRing **:Wiring?**	TYPE1 to TYPE7	Sets/Queries the wire connection setting.	40
:MODE **:MODE?**	1/2 (for 3331 interchangeability)		40
:AVERaging **:AVERaging?**	1/2/5/10/25/50/100	Sets/Queries the number of times to perform averaging.	41
:INTEGrate?		Queries the integration set time and the integration state.	42
:INTEGrate:STATe **:INTEGrate:STATe?**	START/STOP/RESET	Sets/Queries the integration state.	42
:INTEGrate:TIME **:INTEGrate:TIME?**	<Hour(NR1)>, <Minutes(NR1)>	Sets/Queries the integration time.	43
:HARMonic:ORDer:UPPer **:HARMonic:ORDer:UPPer?**	<Order (2 to 50)>	Sets/Queries the upper limit order for harmonic wave analysis.	43
:HOLD **:HOLD?**	OFF/ON/MAX/MIN/RESET	Sets/Queries the holds or releases the display value.	43
:DEMAg **:DEMAg?**	<Zero adjustment execution state>	Performs a zero adjustment. Queries the zero adjustment execution state.	44
:SYNC:CONTrol **:SYNC:CONTrol?**	<Synchronization control setting>	Sets/Queries the synchronization control function.	44

Device-specific Commands (Voltage Range)

Message	Data Formats (Response data for queries)	Description	Reference Page
All Channels (queries are for the representative value [ch1] only)			
:VOLTage?	(<AUTO>, <Voltage Range>)	Queries the voltage range setting item (ch1 only).	44
:VOLTage:AUTO **:VOLTage:AUTO?**	ON/OFF	Sets (all channels) or queries (ch1 only) the voltage automatic range.	45
:VOLTage:RANGe **:VOLTage:RANGe?**	<Voltage Range (NR1)>	Sets (all channels) or queries (ch1 only) the voltage range.	45
ch1			
:VOLTage1?	(<AUTO>, <Voltage Range>)	Queries the voltage range setting item (ch1).	44
:VOLTage1:AUTO **:VOLTage1:AUTO?**	ON/OFF	Sets (ch1) or queries (ch1) the voltage automatic range.	45
:VOLTage1:RANGe **:VOLTage1:RANGe?**	<Voltage Range (NR1)>	Sets (ch1) or queries (ch1) the voltage range.	45
ch2			
:VOLTage2?	(<AUTO>, <Voltage Range>)	Queries the voltage range setting item (ch2).	44
:VOLTage2:AUTO **:VOLTage2:AUTO?**	ON/OFF	Sets (ch2) or queries (ch2) the voltage automatic range.	45
:VOLTage2:RANGe **:VOLTage2:RANGe?**	<Voltage Range (NR1)>	Sets (ch2) or queries (ch2) the voltage range.	45
ch3			
:VOLTage3?	(<AUTO>, <Voltage Range>)	Queries the voltage range setting item (ch3).	44
:VOLTage3:AUTO **:VOLTage3:AUTO?**	ON/OFF	Sets (ch3) or queries (ch3) the voltage automatic range.	45
:VOLTage3:RANGe **:VOLTage3:RANGe?**	<Voltage Range (NR1)>	Sets (ch3) or queries (ch3) the voltage range.	45

Device-specific Commands (Current Range)

Message	Data Formats (Response data for queries)	Description	Reference Page
All Channels (queries are for the representative value [ch1] only)			
:CURRent?	(<AUTO>, <Current Range>, ...)	Queries the current range setting item (ch1 only).	46
:CURRent:AUTO **:CURRent:AUTO?**	ON/OFF	Sets (all channels) or queries (ch1 only) the current automatic range.	46
:CURRent:RANGe **:CURRent:RANGe?**	<Current Range (NR1)>	Sets (all channels) or queries (ch1 only) the current range.	47
:CURRent:EXTRange **:CURRent:EXTRange?**	<Clamp Current Range>	Sets (all channels) or queries (ch1 only) the current range (current sensor).	48
:CURRent:TYPe **:CURRent:TYPe?**	<Current Sensor Type>	Sets (all channels) or queries (ch1 only) the current sensor type.	47
ch1			
:CURRent1?	(<AUTO>, <Current Range>, ...)	Queries the current range setting item (ch1).	46
:CURRent1:AUTO **:CURRent1:AUTO?**	ON/OFF	Sets (ch1) or queries (ch1) the current automatic range.	46
:CURRent1:RANGe **:CURRent1:RANGe?**	<Current Range (NR1)>	Sets (ch1) or queries (ch1) the current range.	47
:CURRent1:EXTRange **:CURRent1:EXTRange?**	<Clamp Current Range>	Sets (ch1) or queries (ch1) the current range (current sensor).	48
:CURRent1:TYPe **:CURRent1:TYPe?**	<Current Sensor Type>	Sets (ch1) or queries (ch1) the current sensor type.	47
ch2			
:CURRent2?	(<AUTO>, <Current Range>, ...)	Queries the current range setting item (ch2).	46
:CURRent2:AUTO **:CURRent2:AUTO?**	ON/OFF	Sets (ch2) or queries (ch2) the current automatic range.	46
:CURRent2:RANGe **:CURRent2:RANGe?**	<Current Range (NR1)>	Sets (ch2) or queries (ch2) the current range.	47
:CURRent2:EXTRange **:CURRent2:EXTRange?**	<Clamp Current Range>	Sets (ch2) or queries (ch2) the current range (current sensor)	48
:CURRent2:TYPe **:CURRent2:TYPe?**	<Current Sensor Type>	Sets (ch2) or queries (ch2) the current sensor type.	47
ch3			
:CURRent3?	(<AUTO>, <Current Range>, ...)	Queries the current range setting item (ch3).	46
:CURRent3:AUTO **:CURRent3:AUTO?**	ON/OFF	Sets (ch3) or queries (ch3) the current automatic range.	46
:CURRent3:RANGe **:CURRent3:RANGe?**	<Current Range (NR1)>	Sets (ch3) or queries (ch3) the current range.	47
:CURRent3:EXTRange **:CURRent3:EXTRange?**	<Clamp Current Range>	Sets (ch3) or queries (ch3) the current range (current sensor).	48
:CURRent3:TYPe **:CURRent3:TYPe?**	<Current Sensor Type>	Sets (ch3) or queries (ch3) the current sensor type.	47

Device-specific Commands (Frequency Range [Zero-crossing Filter])

The frequency range and zero-crossing filter settings are linked.

Message	Data Formats (Response data for queries)	Description	Reference Page
All Channels (queries are for the representative value [ch1] only)			
:FREQuency?	<Frequency Range (NR1)>	Queries (ch1 only) the frequency range (zero-crossing filter).	49
:FREQuency:RANGe **:FREQuency:RANGe?**	<Frequency Range (NR1)>	Sets (all channels) or queries (ch1 only) the frequency range (zero-crossing filter).	49
ch1			
:FREQuency1?	<Frequency Range (NR1)>	Queries (ch1) the frequency range (zero-crossing filter).	49
:FREQuency1:RANGe **:FREQuency1:RANGe?**	<Frequency Range (NR1)>	Sets (ch1) or queries (ch1) the frequency range (zero-crossing filter).	49
ch2			
:FREQuency2?	<Frequency Range (NR1)>	Queries (ch2) the frequency range (zero-crossing filter).	49
:FREQuency2:RANGe **:FREQuency2:RANGe?**	<Frequency Range (NR1)>	Sets (ch2) or queries (ch2) the frequency range (zero-crossing filter).	49
ch3			
:FREQuency3?	<Frequency Range (NR1)>	Queries (ch3) the frequency range (zero-crossing filter).	49
:FREQuency3:RANGe **:FREQuency3:RANGe?**	<Frequency Range (NR1)>	Sets (ch3) or queries (ch3) the frequency range (zero-crossing filter).	49

Device-specific Commands (Synchronization Source)

Message	Data Formats (Response data for queries)	Description	Reference Page
All Channels (queries are for the representative value [ch1] only)			
:SOURce **:SOURce?**	<Synchronization Source>	Sets (all channels) or queries (ch1 only) the synchronization source.	50
:SOURce:TIMEOut **:SOURce:TIMEOut?**	0.1/1/10	Sets (all channels) or queries (ch1 only) the synchronization timeout.	50
ch1			
:SOURce1 **:SOURce1?**	<Synchronization Source>	Sets (ch1) or queries (ch1) the synchronization source.	50
:SOURce1:TIMEOut **:SOURce1:TIMEOut?**	0.1/1/10	Sets (ch1) or queries (ch1) the synchronization timeout.	50
ch2			
:SOURce2 **:SOURce2?**	<Synchronization Source>	Sets (ch2) or queries (ch2) the synchronization source.	50
:SOURce2:TIMEOut **:SOURce2:TIMEOut?**	0.1/1/10	Sets (ch2) or queries (ch2) the synchronization timeout.	50
ch3			
:SOURce3 **:SOURce3?**	<Synchronization Source>	Sets (ch3) or queries (ch3) the synchronization source.	50
:SOURce3:TIMEOut **:SOURce3:TIMEOut?**	0.1/1/10	Sets (ch3) or queries (ch3) the synchronization timeout.	50

Device-specific Commands (VT/CT Ratio)

Message	Data Formats (Response data for queries)	Description	Reference Page
All Channels (queries are for the representative value [ch1] only)			
:SCALe?	(<VT Ratio>, <CT Ratio>)	Queries (ch1 only) the VT and CT ratios.	51
:SCALe:VT **:SCALe:VT?**	<VT Ratio (NRf)>	Sets (all channels) or queries (ch1 only) the VT ratio.	51
:SCALe:CT **:SCALe:CT?**	<CT Ratio (NRf)>	Sets (all channels) or queries (ch1 only) the CT ratio.	52
ch1			
:SCALe1?	(<VT Ratio>, <CT Ratio>)	Queries (ch1) the VT and CT ratios.	51
:SCALe1:VT **:SCALe1:VT?**	<VT Ratio (NRf)>	Sets (ch1) or queries (ch1) the VT ratio.	51
:SCALe1:CT **:SCALe1:CT?**	<CT Ratio (NRf)>	Sets (ch1) or queries (ch1) the CT ratio.	52
ch2			
:SCALe2?	(<VT Ratio>, <CT Ratio>)	Queries (ch2) the VT and CT ratios.	51
:SCALe2:VT **:SCALe2:VT?**	<VT Ratio (NRf)>	Sets (ch2) or queries (ch2) the VT ratio.	51
:SCALe2:CT **:SCALe2:CT?**	<CT Ratio (NRf)>	Sets (ch2) or queries (ch2) the CT ratio.	52
ch3			
:SCALe3?	(<VT Ratio>, <CT Ratio>)	Queries (ch3) the VT and CT ratios.	51
:SCALe3:VT **:SCALe3:VT?**	<VT Ratio (NRf)>	Sets (ch3) or queries (ch3) the VT ratio.	51
:SCALe3:CT **:SCALe3:CT?**	<CT Ratio (NRf)>	Sets (ch3) or queries (ch3) the CT ratio.	52

Device-specific Commands (D/A Output)

Message	Data Formats (Response data for queries)	Description	Reference Page
:AOUT?		Queries (D/A1 output items only) D/A output items.	53
:AOUT:MONitor **:AOUT:MONitor?**	STD/FAST	Sets/Queries the switches between analog output and waveform output.	53
:AOUT:ITEM:U1 **:AOUT:ITEM:U1?**	<Rectification Method>	Sets/Queries the output (rectification method) of the U1 output terminal.	54
:AOUT:ITEM:U2 **:AOUT:ITEM:U2?**	< Rectification Method >	Sets/Queries the output (rectification method) of the U2 output terminal.	54
:AOUT:ITEM:U3 **:AOUT:ITEM:U3?**	< Rectification Method >	Sets/Queries the output (rectification method) of the U3 output terminal.	54
:AOUT:ITEM:I1 **:AOUT:ITEM:I1?**	< Rectification Method >	Sets/Queries the output (rectification method) of the I1 output terminal.	54
:AOUT:ITEM:I2 **:AOUT:ITEM:I2?**	< Rectification Method >	Sets/Queries the output (rectification method) of the I2 output terminal.	54
:AOUT:ITEM:I3 **:AOUT:ITEM:I3?**	< Rectification Method >	Sets/Queries the output (rectification method) of the I3 output terminal.	54
:AOUT:ITEM:P1 **:AOUT:ITEM:P1?**	< Rectification Method >	Sets/Queries the output (rectification method) of the P1 output terminal.	54
:AOUT:ITEM:P2 **:AOUT:ITEM:P2?**	< Rectification Method >	Sets/Queries the output (rectification method) of the P2 output terminal.	54
:AOUT:ITEM:P3 **:AOUT:ITEM:P3?**	< Rectification Method >	Sets/Queries the output (rectification method) of the P3 output terminal.	54
:AOUT:ITEM:P0 **:AOUT:ITEM:P0?**	< Rectification Method >	Sets/Queries the output (rectification method) of the Psum output terminal.	54
:AOUT:ITEM:DA1 **:AOUT:ITEM:DA1?**	<Output Item>	Sets/Queries the D/A1 terminal output item.	54
:AOUT:ITEM:DA2 **:AOUT:ITEM:DA2?**	<Output Item>	Sets/Queries the D/A2 terminal output item.	54
:AOUT:ITEM:DA3 **:AOUT:ITEM:DA3?**	<Output Item>	Sets/Queries the D/A3 terminal output item.	54

Device-specific Commands (Instrument Display Settings)

Message ([ ]: Can be omitted)	Data Formats (Response data for queries)	Description	Reference Page
:DISPlay[:NORMal] **:DISPlay[:NORMal]?**	(<Display a>, <Display b>, <Display c>, <Display d>)	Sets/Queries instrument display items (a) through (d).	55
:DISPlay:NORMal:A **:DISPlay:NORMal:A?**	<Display a>	Sets/Queries instrument display item (a).	55
:DISPlay:NORMal:B **:DISPlay:NORMal:B?**	<Display b>	Sets/Queries instrument display item (b).	55
:DISPlay:NORMal:C **:DISPlay:NORMal:C?**	<Display c>	Sets/Queries instrument display item (c).	55
:DISPlay:NORMal:D **:DISPlay:NORMal:D?**	<Display d>	Sets/Queries instrument display item (d).	55
:DISPlay:MODE **:DISPlay:MODE?**	<Display Specification>	Sets/Queries the instrument display mode (normal/harmonic wave).	58
:DISPlay:HARMonic:ORDer **:DISPlay:HARMonic:ORDer?**	<Harmonic Wave Order 0 to 50>	Sets/Queries the display order for harmonic wave order common display.	58
:DISPlay:HARMonic:B:ITEM **:DISPlay:HARMonic:B:ITEM?**	<Harmonic Wave Display Item>	Sets/Queries the display item (b) for harmonic wave order common display.	58
:DISPlay:HARMonic:C:ITEM **:DISPlay:HARMonic:C:ITEM?**	<Harmonic Wave Display Item>	Sets/Queries the display item (c) for harmonic wave order common display.	58
:DISPlay:HARMonic:D:ITEM **:DISPlay:HARMonic:D:ITEM?**	<Harmonic Wave Display Item>	Sets/Queries the display item (d) for harmonic wave order common display.	58
:DISPlay:HORDerSel:A:ORDer **:DISPlay:HORDerSel:A:ORDer?**	<Harmonic Wave Order 0 to 50>	Display order (a) for harmonic wave order individual display.	59
:DISPlay:HORDerSel:A:ITEM **:DISPlay:HORDerSel:A:ITEM?**	<Harmonic Wave Display Item>	Display item (a) for harmonic wave order individual display.	59
:DISPlay:HORDerSel:B:ORDer **:DISPlay:HORDerSel:B:ORDer?**	<Harmonic Wave Order 0 to 50>	Display order (b) for harmonic wave order individual display.	59
:DISPlay:HORDerSel:B:ITEM **:DISPlay:HORDerSel:B:ITEM?**	<Harmonic Wave Display Item>	Display item (b) for harmonic wave order individual display.	59
:DISPlay:HORDerSel:C:ORDer **:DISPlay:HORDerSel:C:ORDer?**	<Harmonic Wave Order 0 to 50>	Display order (c) for harmonic wave order individual display.	59
:DISPlay:HORDerSel:C:ITEM **:DISPlay:HORDerSel:C:ITEM?**	<Harmonic Wave Display Item>	Display item (c) for harmonic wave order individual display.	59
:DISPlay:HORDerSel:D:ORDer **:DISPlay:HORDerSel:D:ORDer?**	<Harmonic Wave Order 0 to 50>	Display order (d) for harmonic wave order individual display.	59
:DISPlay:HORDerSel:D:ITEM **:DISPlay:HORDerSel:D:ITEM?**	<Harmonic Wave Display Item>	Display item (d) for harmonic wave order individual display.	59

Device-specific Commands (Measurement Value Output)

Note: :MEASure[:NORMAL]:ITEM:U:CH1(?) → Setting Command:MEASure[:NORMAL]:ITEM:U:CH1
Query :MEASure[:NORMAL]:ITEM:U:CH1?

Message ([ ]: Can be omitted)	Data Formats (Response data for queries)	Description	Reference Page
:MEASure[:POWer]? **:MEASure[:NORMal]:VALue?**	<Measurement Item 1> ... Maximum 180	Queries measurement data.	60
:MEASure:ITEM:ALLClear		Turns OFF all output items (including harmonic wave).	65
:MEASure[:NORMal]:ITEM?		Queries output items.	65
:DATAout:ITEM(?)	(<Output Item 1>, <Output Item 2>, <Output Item 3>, <Output Item 4>, <Output Item 5>, <Output Item 6>)	":MEASure?" query output specification (3331-compatible)	66
:MEASure[:NORMAL]:ITEM:STATus:INST(?) **:MEASure[:NORMAL]:ITEM:STATus:MAXmin(?)**	<Output Item 0/1>	":MEASure?" query Set/Query the measurement status output.	67
:MEASure[:NORMAL]:ITEM:U:ALL **:MEASure[:NORMAL]:ITEM:U:CH1(?)** **:MEASure[:NORMAL]:ITEM:U:CH2(?)** **:MEASure[:NORMAL]:ITEM:U:CH3(?)** **:MEASure[:NORMAL]:ITEM:U:CH0(?)**	<Output Item (Rectification Method)>	":MEASure?" query Sets/Queries the voltage (instantaneous value) data output.	68
:MEASure[:NORMAL]:ITEM:U_MAX:ALL **:MEASure[:NORMAL]:ITEM:U_MAX:CH1(?)** **:MEASure[:NORMAL]:ITEM:U_MAX:CH2(?)** **:MEASure[:NORMAL]:ITEM:U_MAX:CH3(?)** **:MEASure[:NORMAL]:ITEM:U_MAX:CH0(?)**	<Output Item (Rectification Method)>	":MEASure?" query Sets/Queries the voltage (maximum value) data output.	68
:MEASure[:NORMAL]:ITEM:U_MIN:ALL **:MEASure[:NORMAL]:ITEM:U_MIN:CH1(?)** **:MEASure[:NORMAL]:ITEM:U_MIN:CH2(?)** **:MEASure[:NORMAL]:ITEM:U_MIN:CH3(?)** **:MEASure[:NORMAL]:ITEM:U_MIN:CH0(?)**	<Output Item (Rectification Method)>	":MEASure?" query Sets/Queries the voltage (minimum value) data output.	68
:MEASure[:NORMAL]:ITEM:I:ALL **:MEASure[:NORMAL]:ITEM:I:CH1(?)** **:MEASure[:NORMAL]:ITEM:I:CH2(?)** **:MEASure[:NORMAL]:ITEM:I:CH3(?)** **:MEASure[:NORMAL]:ITEM:I:CH0(?)**	<Output Item (Rectification Method)>	":MEASure?" query Sets/Queries the current (instantaneous value) data output.	69
:MEASure[:NORMAL]:ITEM:I_MAX:ALL **:MEASure[:NORMAL]:ITEM:I_MAX:CH1(?)** **:MEASure[:NORMAL]:ITEM:I_MAX:CH2(?)** **:MEASure[:NORMAL]:ITEM:I_MAX:CH3(?)** **:MEASure[:NORMAL]:ITEM:I_MAX:CH0(?)**	<Output Item (Rectification Method)>	":MEASure?" query Sets/Queries the current (maximum value) data output.	69
:MEASure[:NORMAL]:ITEM:I_MIN:ALL **:MEASure[:NORMAL]:ITEM:I_MIN:CH1(?)** **:MEASure[:NORMAL]:ITEM:I_MIN:CH2(?)** **:MEASure[:NORMAL]:ITEM:I_MIN:CH3(?)** **:MEASure[:NORMAL]:ITEM:I_MIN:CH0(?)**	<Output Item (Rectification Method)>	":MEASure?" query Sets/Queries the current (minimum value) data output.	69

Message ([ ]: Can be omitted)	Data Formats (Response data for queries)	Description	Reference Page
:MEASure[:NORMAL]:ITEM:P:ALL **:MEASure[:NORMAL]:ITEM:P:CH1(?)** **:MEASure[:NORMAL]:ITEM:P:CH2(?)** **:MEASure[:NORMAL]:ITEM:P:CH3(?)** **:MEASure[:NORMAL]:ITEM:P:CH0(?)**	<Output Item (Rectification Method)>	":MEASure?" query Sets/Queries the active power (instantaneous value) data output.	70
:MEASure[:NORMAL]:ITEM:P_MAX:ALL **:MEASure[:NORMAL]:ITEM:P_MAX:CH1(?)** **:MEASure[:NORMAL]:ITEM:P_MAX:CH2(?)** **:MEASure[:NORMAL]:ITEM:P_MAX:CH3(?)** **:MEASure[:NORMAL]:ITEM:P_MAX:CH0(?)**	<Output Item (Rectification Method)>	":MEASure?" query Sets/Queries the active power (maximum value) data output.	70
:MEASure[:NORMAL]:ITEM:P_MIN:ALL **:MEASure[:NORMAL]:ITEM:P_MIN:CH1(?)** **:MEASure[:NORMAL]:ITEM:P_MIN:CH2(?)** **:MEASure[:NORMAL]:ITEM:P_MIN:CH3(?)** **:MEASure[:NORMAL]:ITEM:P_MIN:CH0(?)**	<Output Item (Rectification Method)>	":MEASure?" query Sets/Queries the active power (minimum value) data output.	70
:MEASure[:NORMAL]:ITEM:S:ALL **:MEASure[:NORMAL]:ITEM:S:CH1(?)** **:MEASure[:NORMAL]:ITEM:S:CH2(?)** **:MEASure[:NORMAL]:ITEM:S:CH3(?)** **:MEASure[:NORMAL]:ITEM:S:CH0(?)**	<Output Item (Rectification Method)>	":MEASure?" query Sets/Queries the apparent power (instantaneous value) data output.	71
:MEASure[:NORMAL]:ITEM:S_MAX:ALL **:MEASure[:NORMAL]:ITEM:S_MAX:CH1(?)** **:MEASure[:NORMAL]:ITEM:S_MAX:CH2(?)** **:MEASure[:NORMAL]:ITEM:S_MAX:CH3(?)** **:MEASure[:NORMAL]:ITEM:S_MAX:CH0(?)**	<Output Item (Rectification Method)>	":MEASure?" query Sets/Queries the apparent power (maximum value) data output.	71
:MEASure[:NORMAL]:ITEM:S_MIN:ALL **:MEASure[:NORMAL]:ITEM:S_MIN:CH1(?)** **:MEASure[:NORMAL]:ITEM:S_MIN:CH2(?)** **:MEASure[:NORMAL]:ITEM:S_MIN:CH3(?)** **:MEASure[:NORMAL]:ITEM:S_MIN:CH0(?)**	<Output Item (Rectification Method)>	":MEASure?" query Sets/Queries the apparent power (minimum value) data output.	71
:MEASure[:NORMAL]:ITEM:Q:ALL **:MEASure[:NORMAL]:ITEM:Q:CH1(?)** **:MEASure[:NORMAL]:ITEM:Q:CH2(?)** **:MEASure[:NORMAL]:ITEM:Q:CH3(?)** **:MEASure[:NORMAL]:ITEM:Q:CH0(?)**	<Output Item (Rectification Method)>	":MEASure?" query Sets/Queries the reactive power (instantaneous value) data output.	72
:MEASure[:NORMAL]:ITEM:Q_MAX:ALL **:MEASure[:NORMAL]:ITEM:Q_MAX:CH1(?)** **:MEASure[:NORMAL]:ITEM:Q_MAX:CH2(?)** **:MEASure[:NORMAL]:ITEM:Q_MAX:CH3(?)** **:MEASure[:NORMAL]:ITEM:Q_MAX:CH0(?)**	<Output Item (Rectification Method)>	":MEASure?" query Sets/Queries the reactive power (maximum value) data output.	72
:MEASure[:NORMAL]:ITEM:Q_MIN:ALL **:MEASure[:NORMAL]:ITEM:Q_MIN:CH1(?)** **:MEASure[:NORMAL]:ITEM:Q_MIN:CH2(?)** **:MEASure[:NORMAL]:ITEM:Q_MIN:CH3(?)** **:MEASure[:NORMAL]:ITEM:Q_MIN:CH0(?)**	<Output Item (Rectification Method)>	":MEASure?" query Sets/Queries the reactive power (minimum value) output data.	72
:MEASure[:NORMAL]:ITEM:PF:ALL **:MEASure[:NORMAL]:ITEM:PF:CH1(?)** **:MEASure[:NORMAL]:ITEM:PF:CH2(?)** **:MEASure[:NORMAL]:ITEM:PF:CH3(?)** **:MEASure[:NORMAL]:ITEM:PF:CH0(?)**	<Output Item (Rectification Method)>	":MEASure?" query Sets/Queries the power factor (instantaneous value) data output.	73
:MEASure[:NORMAL]:ITEM:PF_MAX:ALL **:MEASure[:NORMAL]:ITEM:PF_MAX:CH1(?)** **:MEASure[:NORMAL]:ITEM:PF_MAX:CH2(?)** **:MEASure[:NORMAL]:ITEM:PF_MAX:CH3(?)** **:MEASure[:NORMAL]:ITEM:PF_MAX:CH0(?)**	<Output Item (Rectification Method)>	":MEASure?" query Sets/Queries the power factor (maximum value) data output.	73

Message ([ ]: Can be omitted)	Data Formats (Response data for queries)	Description	Reference Page
:MEASure[:NORMAL]:ITEM:PF_MIN:ALL **:MEASure[:NORMAL]:ITEM:PF_MIN:CH1(?)** **:MEASure[:NORMAL]:ITEM:PF_MIN:CH2(?)** **:MEASure[:NORMAL]:ITEM:PF_MIN:CH3(?)** **:MEASure[:NORMAL]:ITEM:PF_MIN:CH0(?)**	<Output Item (Rectification Method)>	":MEASure?" query Sets/Queries the power factor (minimum value) data output.	73
:MEASure[:NORMAL]:ITEM:DEG:ALL **:MEASure[:NORMAL]:ITEM:DEG:CH1(?)** **:MEASure[:NORMAL]:ITEM:DEG:CH2(?)** **:MEASure[:NORMAL]:ITEM:DEG:CH3(?)** **:MEASure[:NORMAL]:ITEM:DEG:CH0(?)**	<Output Item (Rectification Method)>	":MEASure?" query Sets/Queries the phase angle (instantaneous value) data output.	74
:MEASure[:NORMAL]:ITEM:DEG_MAX:ALL **:MEASure[:NORMAL]:ITEM:DEG_MAX:CH1(?)** **:MEASure[:NORMAL]:ITEM:DEG_MAX:CH2(?)** **:MEASure[:NORMAL]:ITEM:DEG_MAX:CH3(?)** **:MEASure[:NORMAL]:ITEM:DEG_MAX:CH0(?)**	<Output Item (Rectification Method)>	":MEASure?" query Sets/Queries the phase angle (maximum value) data output.	74
:MEASure[:NORMAL]:ITEM:DEG_MIN:ALL **:MEASure[:NORMAL]:ITEM:DEG_MIN:CH1(?)** **:MEASure[:NORMAL]:ITEM:DEG_MIN:CH2(?)** **:MEASure[:NORMAL]:ITEM:DEG_MIN:CH3(?)** **:MEASure[:NORMAL]:ITEM:DEG_MIN:CH0(?)**	<Output Item (Rectification Method)>	":MEASure?" query Sets/Queries the phase angle (minimum value) data output.	74
:MEASure[:NORMAL]:ITEM:FREQU:ALL **:MEASure[:NORMAL]:ITEM:FREQU:CH1(?)** **:MEASure[:NORMAL]:ITEM:FREQU:CH2(?)** **:MEASure[:NORMAL]:ITEM:FREQU:CH3(?)**	<Output Setting 0/1>	":MEASure?" query Sets/Queries the voltage frequency (instantaneous value) data output.	75
:MEASure[:NORMAL]:ITEM:FREQU_MAX:ALL **:MEASure[:NORMAL]:ITEM:FREQU_MAX:CH1(?)** **:MEASure[:NORMAL]:ITEM:FREQU_MAX:CH2(?)** **:MEASure[:NORMAL]:ITEM:FREQU_MAX:CH3(?)**	<Output Setting 0/1>	":MEASure?" query Sets/Queries the voltage frequency (maximum value) data output.	75
:MEASure[:NORMAL]:ITEM:FREQU_MIN:ALL **:MEASure[:NORMAL]:ITEM:FREQU_MIN:CH1(?)** **:MEASure[:NORMAL]:ITEM:FREQU_MIN:CH2(?)** **:MEASure[:NORMAL]:ITEM:FREQU_MIN:CH3(?)**	<Output Setting 0/1>	":MEASure?" query Sets/Queries the voltage frequency (minimum value) data output.	75
:MEASure[:NORMAL]:ITEM:FREQI:ALL **:MEASure[:NORMAL]:ITEM:FREQI:CH1(?)** **:MEASure[:NORMAL]:ITEM:FREQI:CH2(?)** **:MEASure[:NORMAL]:ITEM:FREQI:CH3(?)**	<Output Setting 0/1>	":MEASure?" query Sets/Queries the current frequency (instantaneous value) data output.	76
:MEASure[:NORMAL]:ITEM:FREQI_MAX:ALL **:MEASure[:NORMAL]:ITEM:FREQI_MAX:CH1(?)** **:MEASure[:NORMAL]:ITEM:FREQI_MAX:CH2(?)** **:MEASure[:NORMAL]:ITEM:FREQI_MAX:CH3(?)**	<Output Setting 0/1>	":MEASure?" query Sets/Queries the current frequency (maximum value) data output.	76
:MEASure[:NORMAL]:ITEM:FREQI_MIN:ALL **:MEASure[:NORMAL]:ITEM:FREQI_MIN:CH1(?)** **:MEASure[:NORMAL]:ITEM:FREQI_MIN:CH2(?)** **:MEASure[:NORMAL]:ITEM:FREQI_MIN:CH3(?)**	<Output Setting 0/1>	":MEASure?" query Sets/Queries the current frequency (minimum value) data output.	76
:MEASure[:NORMAL]:ITEM:TIME(?)	<Output Setting 0/1>	":MEASure?" query Sets/Queries the integration time data output.	77
:MEASure[:NORMAL]:ITEM:IH:ALL **:MEASure[:NORMAL]:ITEM:IH:CH1(?)** **:MEASure[:NORMAL]:ITEM:IH:CH2(?)** **:MEASure[:NORMAL]:ITEM:IH:CH3(?)**	<Output Item (Rectification Method)>	":MEASure?" query Sets/Queries the integration current (total sum) data output.	77
:MEASure[:NORMAL]:ITEM:PIH:ALL **:MEASure[:NORMAL]:ITEM:PIH:CH1(?)** **:MEASure[:NORMAL]:ITEM:PIH:CH2(?)** **:MEASure[:NORMAL]:ITEM:PIH:CH3(?)**	<Output Item (Rectification Method)>	":MEASure?" query Sets/Queries the positive integration current data output.	78

Message ([ ]: Can be omitted)	Data Formats (Response data for queries)	Description	Reference Page
:MEASure[:NORMAL]:ITEM:MIH:ALL **:MEASure[:NORMAL]:ITEM:MIH:CH1(?)** **:MEASure[:NORMAL]:ITEM:MIH:CH2(?)** **:MEASure[:NORMAL]:ITEM:MIH:CH3(?)**	<Output Item (Rectification Method)>	":MEASure?" query Sets/Queries the negative integration current data output.	78
:MEASure[:NORMAL]:ITEM:WP:ALL **:MEASure[:NORMAL]:ITEM:WP:CH1(?)** **:MEASure[:NORMAL]:ITEM:WP:CH2(?)** **:MEASure[:NORMAL]:ITEM:WP:CH3(?)** **:MEASure[:NORMAL]:ITEM:WP:CH0(?)**	<Output Item (Rectification Method)>	":MEASure?" query Sets/Queries the integration active power (total sum) data output.	79
:MEASure[:NORMAL]:ITEM:PWP:ALL **:MEASure[:NORMAL]:ITEM:PWP:CH1(?)** **:MEASure[:NORMAL]:ITEM:PWP:CH2(?)** **:MEASure[:NORMAL]:ITEM:PWP:CH3(?)** **:MEASure[:NORMAL]:ITEM:PWP:CH0(?)**	<Output Item (Rectification Method)>	":MEASure?" query Sets/Queries the integration active power (positive) data output.	79
:MEASure[:NORMAL]:ITEM:MWP:ALL **:MEASure[:NORMAL]:ITEM:MWP:CH1(?)** **:MEASure[:NORMAL]:ITEM:MWP:CH2(?)** **:MEASure[:NORMAL]:ITEM:MWP:CH3(?)** **:MEASure[:NORMAL]:ITEM:MWP:CH0(?)**	<Output Item (Rectification Method)>	":MEASure?" query Sets/Queries the integration active power (negative) data output.	80
:MEASure[:NORMAL]:ITEM:UPK:ALL **:MEASure[:NORMAL]:ITEM:UPK:CH1(?)** **:MEASure[:NORMAL]:ITEM:UPK:CH2(?)** **:MEASure[:NORMAL]:ITEM:UPK:CH3(?)**	<Output Setting 0/1>	":MEASure?" query Sets/Queries the voltage waveform peak value (instantaneous value) data output.	80
:MEASure[:NORMAL]:ITEM:UPK_MAX:ALL **:MEASure[:NORMAL]:ITEM:UPK_MAX:CH1(?)** **:MEASure[:NORMAL]:ITEM:UPK_MAX:CH2(?)** **:MEASure[:NORMAL]:ITEM:UPK_MAX:CH3(?)**	<Output Setting 0/1>	":MEASure?" query Sets/Queries the voltage waveform peak value (maximum value) data output.	80
:MEASure[:NORMAL]:ITEM:UPK_MIN:ALL **:MEASure[:NORMAL]:ITEM:UPK_MIN:CH1(?)** **:MEASure[:NORMAL]:ITEM:UPK_MIN:CH2(?)** **:MEASure[:NORMAL]:ITEM:UPK_MIN:CH3(?)**	<Output Setting 0/1>	":MEASure?" query Sets/Queries the voltage waveform peak value (minimum value) data output.	80
:MEASure[:NORMAL]:ITEM:IPK:ALL **:MEASure[:NORMAL]:ITEM:IPK:CH1(?)** **:MEASure[:NORMAL]:ITEM:IPK:CH2(?)** **:MEASure[:NORMAL]:ITEM:IPK:CH3(?)**	<Output Setting 0/1>	":MEASure?" query Sets/Queries the current waveform peak (instantaneous value) data output.	81
:MEASure[:NORMAL]:ITEM:IPK_MAX:ALL **:MEASure[:NORMAL]:ITEM:IPK_MAX:CH1(?)** **:MEASure[:NORMAL]:ITEM:IPK_MAX:CH2(?)** **:MEASure[:NORMAL]:ITEM:IPK_MAX:CH3(?)**	<Output Setting 0/1>	":MEASure?" query Sets/Queries the current waveform peak value (maximum value) data output.	81
:MEASure[:NORMAL]:ITEM:IPK_MIN:ALL **:MEASure[:NORMAL]:ITEM:IPK_MIN:CH1(?)** **:MEASure[:NORMAL]:ITEM:IPK_MIN:CH2(?)** **:MEASure[:NORMAL]:ITEM:IPK_MIN:CH3(?)**	<Output Setting 0/1>	":MEASure?" query Sets/Queries the current waveform peak value (minimum value) data output.	81
:MEASure[:NORMAL]:ITEM:EFFiciency(?)	<Output Setting>	":MEASure?" query Sets/Queries the efficiency (instantaneous value) data output.	81
:MEASure[:NORMAL]:ITEM:EFF_MAX(?)	<Output Setting>	":MEASure?" query Sets/Queries the efficiency (maximum value) data output.	81

Message ([ ]: Can be omitted)	Data Formats (Response data for queries)	Description	Reference Page
:MEASure[:NORMAL]:ITEM:EFF_MIN(?)	<Output Setting>	":MEASure?" query Sets/Queries the efficiency (minimum value) data output.	81
:MEASure[:NORMAL]:ITEM:UCFactor:ALL **:MEASure[:NORMAL]:ITEM:UCFactor:CH1(?)** **:MEASure[:NORMAL]:ITEM:UCFactor:CH2(?)** **:MEASure[:NORMAL]:ITEM:UCFactor:CH3(?)**	<Output Setting 0/1>	":MEASure?" query Sets/Queries the voltage crest factor (instantaneous value) data output.	82
:MEASure[:NORMAL]:ITEM:UCF_MAX:ALL **:MEASure[:NORMAL]:ITEM:UCF_MAX:CH1(?)** **:MEASure[:NORMAL]:ITEM:UCF_MAX:CH2(?)** **:MEASure[:NORMAL]:ITEM:UCF_MAX:CH3(?)**	<Output Setting 0/1>	":MEASure?" query Sets/Queries the voltage crest factor (maximum value) data output.	82
:MEASure[:NORMAL]:ITEM:UCF_MIN:ALL **:MEASure[:NORMAL]:ITEM:UCF_MIN:CH1(?)** **:MEASure[:NORMAL]:ITEM:UCF_MIN:CH2(?)** **:MEASure[:NORMAL]:ITEM:UCF_MIN:CH3(?)**	<Output Setting 0/1>	":MEASure?" query Sets/Queries the voltage crest factor (minimum value) data output.	82
:MEASure[:NORMAL]:ITEM:ICFactor:ALL **:MEASure[:NORMAL]:ITEM:ICFactor:CH1(?)** **:MEASure[:NORMAL]:ITEM:ICFactor:CH2(?)** **:MEASure[:NORMAL]:ITEM:ICFactor:CH3(?)**	<Output Setting 0/1>	":MEASure?" query Sets/Queries the current crest factor (instantaneous value) data output.	83
:MEASure[:NORMAL]:ITEM:ICF_MAX:ALL **:MEASure[:NORMAL]:ITEM:ICF_MAX:CH1(?)** **:MEASure[:NORMAL]:ITEM:ICF_MAX:CH2(?)** **:MEASure[:NORMAL]:ITEM:ICF_MAX:CH3(?)**	<Output Setting 0/1>	":MEASure?" query Sets/Queries the current crest factor (maximum value) data output.	83
:MEASure[:NORMAL]:ITEM:ICF_MIN:ALL **:MEASure[:NORMAL]:ITEM:ICF_MIN:CH1(?)** **:MEASure[:NORMAL]:ITEM:ICF_MIN:CH2(?)** **:MEASure[:NORMAL]:ITEM:ICF_MIN:CH3(?)**	<Output Setting 0/1>	":MEASure?" query Sets/Queries the current crest factor (minimum value) data output.	83
:MEASure[:NORMAL]:ITEM:ITAVerage:ALL **:MEASure[:NORMAL]:ITEM:ITAVerage:CH1(?)** **:MEASure[:NORMAL]:ITEM:ITAVerage:CH2(?)** **:MEASure[:NORMAL]:ITEM:ITAVerage:CH3(?)**	<Output Item (Rectification Method)>	":MEASure?" query Sets/Queries the time average current data output.	83
:MEASure[:NORMAL]:ITEM:PTAVerage:ALL **:MEASure[:NORMAL]:ITEM:PTAVerage:CH1(?)** **:MEASure[:NORMAL]:ITEM:PTAVerage:CH2(?)** **:MEASure[:NORMAL]:ITEM:PTAVerage:CH3(?)** **:MEASure[:NORMAL]:ITEM:PTAVerage:CH0(?)**	<Output Item (Rectification Method)>	":MEASure?" query Sets/Queries the time average active power data output.	84
:MEASure[:NORMAL]:ITEM:URF:ALL **:MEASure[:NORMAL]:ITEM:URF:CH1(?)** **:MEASure[:NORMAL]:ITEM:URF:CH2(?)** **:MEASure[:NORMAL]:ITEM:URF:CH3(?)**	<Output Setting 0/1>	":MEASure?" query Sets/Queries the voltage ripple factor (instantaneous value) data output.	84
:MEASure[:NORMAL]:ITEM:URF_MAX:ALL **:MEASure[:NORMAL]:ITEM:URF_MAX:CH1(?)** **:MEASure[:NORMAL]:ITEM:URF_MAX:CH2(?)** **:MEASure[:NORMAL]:ITEM:URF_MAX:CH3(?)**	<Output Setting 0/1>	":MEASure?" query Sets/Queries the voltage ripple factor (maximum value) data output.	84
:MEASure[:NORMAL]:ITEM:URF_MIN:ALL **:MEASure[:NORMAL]:ITEM:URF_MIN:CH1(?)** **:MEASure[:NORMAL]:ITEM:URF_MIN:CH2(?)** **:MEASure[:NORMAL]:ITEM:URF_MIN:CH3(?)**	<Output Setting 0/1>	":MEASure?" query Sets/Queries the voltage ripple factor (minimum value) data output.	84
:MEASure[:NORMAL]:ITEM:IRF:ALL **:MEASure[:NORMAL]:ITEM:IRF:CH1(?)** **:MEASure[:NORMAL]:ITEM:IRF:CH2(?)** **:MEASure[:NORMAL]:ITEM:IRF:CH3(?)**	<Output Setting 0/1>	":MEASure?" query Sets/Queries the current ripple factor (instantaneous value) data output.	85
:MEASure[:NORMAL]:ITEM:IRF_MAX:ALL **:MEASure[:NORMAL]:ITEM:IRF_MAX:CH1(?)** **:MEASure[:NORMAL]:ITEM:IRF_MAX:CH2(?)** **:MEASure[:NORMAL]:ITEM:IRF_MAX:CH3(?)**	<Output Setting 0/1>	":MEASure?" query Sets/Queries the current ripple factor (maximum value) data output.	85

Message ([ ]: Can be omitted)	Data Formats (Response data for queries)	Description	Reference Page
:MEASure[:NORMAL]:ITEM:IRF_MIN:ALL **:MEASure[:NORMAL]:ITEM:IRF_MIN:CH1(?)** **:MEASure[:NORMAL]:ITEM:IRF_MIN:CH2(?)** **:MEASure[:NORMAL]:ITEM:IRF_MIN:CH3(?)**	<Output Setting 0/1>	":MEASure?" query Sets/Queries the current ripple factor (minimum value) data output.	85
:MEASure[:NORMal]:ITEM:UTHD:ALL **:MEASure[:NORMal]:ITEM:UTHD:CH1(?)** **:MEASure[:NORMal]:ITEM:UTHD:CH2(?)** **:MEASure[:NORMal]:ITEM:UTHD:CH3(?)**	<Output Setting 0/1>	":MEASure?" query Sets/Queries the total harmonic wave voltage distortion factor (instantaneous value) data output.	86
:MEASure[:NORMal]:ITEM:UTHD_MAX:ALL **:MEASure[:NORMal]:ITEM:UTHD_MAX:CH1(?)** **:MEASure[:NORMal]:ITEM:UTHD_MAX:CH2(?)** **:MEASure[:NORMal]:ITEM:UTHD_MAX:CH3(?)**	<Output Setting 0/1>	":MEASure?" query Sets/Queries the total harmonic wave voltage distortion factor (maximum value) data output.	86
:MEASure[:NORMal]:ITEM:UTHD_MIN:ALL **:MEASure[:NORMal]:ITEM:UTHD_MIN:CH1(?)** **:MEASure[:NORMal]:ITEM:UTHD_MIN:CH2(?)** **:MEASure[:NORMal]:ITEM:UTHD_MIN:CH3(?)**	<Output Setting 0/1>	":MEASure?" query Sets/Queries the total harmonic wave voltage distortion factor data output.	86
:MEASure[:NORMal]:ITEM:ITHD:ALL **:MEASure[:NORMal]:ITEM:ITHD:CH1(?)** **:MEASure[:NORMal]:ITEM:ITHD:CH2(?)** **:MEASure[:NORMal]:ITEM:ITHD:CH3(?)**	<Output Setting 0/1>	":MEASure?" query Sets/Queries the total harmonic wave current distortion factor (instantaneous value) data output.	87
:MEASure[:NORMal]:ITEM:ITHD_MAX:ALL **:MEASure[:NORMal]:ITEM:ITHD_MAX:CH1(?)** **:MEASure[:NORMal]:ITEM:ITHD_MAX:CH2(?)** **:MEASure[:NORMal]:ITEM:ITHD_MAX:CH3(?)**	<Output Setting 0/1>	":MEASure?" query Sets/Queries the total harmonic wave current distortion factor (maximum value) data output.	87
:MEASure[:NORMal]:ITEM:ITHD_MIN:ALL **:MEASure[:NORMal]:ITEM:ITHD_MIN:CH1(?)** **:MEASure[:NORMal]:ITEM:ITHD_MIN:CH2(?)** **:MEASure[:NORMal]:ITEM:ITHD_MIN:CH3(?)**	<Output Setting 0/1>	":MEASure?" query Sets/Queries the total harmonic wave current distortion factor (minimum value) data output.	87
:MEASure[:NORMal]:ITEM:UCHDeg:ALL **:MEASure[:NORMal]:ITEM:UCHDeg:CH2_1(?)** **:MEASure[:NORMal]:ITEM:UCHDeg:CH3_1(?)**	<Output Setting 0/1>	":MEASure?" query Sets/Queries the inter-channel voltage fundamental wave phase difference (instantaneous value) data output.	88
:MEASure[:NORMal]:ITEM:UCHDeg_MAX:ALL **:MEASure[:NORMal]:ITEM:UCHDeg_MAX:CH2_1(?)** **:MEASure[:NORMal]:ITEM:UCHDeg_MAX:CH3_1(?)**	<Output Setting 0/1>	":MEASure?" query Sets/Queries the inter-channel voltage fundamental wave phase difference (maximum value) data output.	88
:MEASure[:NORMal]:ITEM:UCHDeg_MIN:ALL **:MEASure[:NORMal]:ITEM:UCHDeg_MIN:CH2_1(?)** **:MEASure[:NORMal]:ITEM:UCHDeg_MIN:CH3_1(?)**	<Output Setting 0/1>	":MEASure?" query Sets/Queries the inter-channel voltage fundamental wave phase difference (minimum value) data output.	88

Message ([ ]: Can be omitted)	Data Formats (Response data for queries)	Description	Reference Page
:MEASure[:NORMal]:ITEM:ICHDeg:ALL **:MEASure[:NORMal]:ITEM:ICHDeg:CH2_1(?)** **:MEASure[:NORMal]:ITEM:ICHDeg:CH3_1(?)**	<Output Setting 0/1>	":MEASure?" query Sets/Queries the inter-channel current fundamental wave phase difference (instantaneous value) data output.	88
:MEASure[:NORMal]:ITEM:ICHDeg_MAX:ALL **:MEASure[:NORMal]:ITEM:ICHDeg_MAX:CH2_1(?)** **:MEASure[:NORMal]:ITEM:ICHDeg_MAX:CH3_1(?)**	<Output Setting 0/1>	":MEASure?" query Sets/Queries the inter-channel current fundamental wave phase difference (maximum value) data output.	88
:MEASure[:NORMal]:ITEM:ICHDeg_MIN:ALL **:MEASure[:NORMal]:ITEM:ICHDeg_MIN:CH2_1(?)** **:MEASure[:NORMal]:ITEM:ICHDeg_MIN:CH3_1(?)**	<Output Setting 0/1>	":MEASure?" query Sets/Queries the inter-channel current fundamental wave phase difference (minimum value) data output.	88

Device-specific Commands (Measurement Value Output Settings [Harmonic Wave])

Note: :MEASure:HARMonic:ITEM:U:CH1(?) → Setting Command :MEASure:HARMonic:ITEM:U:CH1
Query :MEASure:HARMonic:ITEM:U:CH1?

Message ([ ]: Can be omitted)	Data Formats (Response data for queries)	Description	Reference Page
:MEASure:HARMonic[:VALue]?		Harmonic wave measurement data output.	89
:MEASure:HARMonic:ITEM:ALLClear		":MEASure:HARMonic?" Turns OFF all query output.	91
:MEASure:HARMonic:ITEM:LIST(?)	(<Output Item 1>, <Output Item 2>, <Output Item 3>, <Output Item 4>, <Output Item 5>, <Output Item 6>)	":MEASure:HARMonic?"query. Sets/Queries output items.	92
:MEASure:HARMonic:ITEM:ORDer(?)	(<Lower Limit Order>, <Upper Limit Order>, <ODD/EVEN/ALL>)	Sets/Queries the output order of ":MEASure:HARMonic?" queries.	93
:MEASure:HARMonic:ITEM:STATus:INST(?) **:MEASure:HARMonic:ITEM:STATus:MAXmin(?)**	<Output Setting 0/1>	":MEASure:HARMonic?" query Sets/Querys the measurement status output	93
:MEASure:HARMonic:ITEM:U:ALL **:MEASure:HARMonic:ITEM:U:CH1(?)** **:MEASure:HARMonic:ITEM:U:CH2(?)** **:MEASure:HARMonic:ITEM:U:CH3(?)** **:MEASure:HARMonic:ITEM:U:CH0(?)**	<Output Setting 0/1>	":MEASure:HARMonic?" Sets/Queries the output of the harmonic wave voltage effective value output for the above query.	94
:MEASure:HARMonic:ITEM:U_MAX:ALL **:MEASure:HARMonic:ITEM:U_MAX:CH1(?)** **:MEASure:HARMonic:ITEM:U_MAX:CH2(?)** **:MEASure:HARMonic:ITEM:U_MAX:CH3(?)** **:MEASure:HARMonic:ITEM:U_MAX:CH0(?)**	<Output Setting 0/1>	":MEASure:HARMonic?" Sets/Queries the output of the harmonic wave voltage effective value (maximum value) output for the above query.	94
:MEASure:HARMonic:ITEM:U_MIN:ALL **:MEASure:HARMonic:ITEM:U_MIN:CH1(?)** **:MEASure:HARMonic:ITEM:U_MIN:CH2(?)** **:MEASure:HARMonic:ITEM:U_MIN:CH3(?)** **:MEASure:HARMonic:ITEM:U_MIN:CH0(?)**	<Output Setting 0/1>	":MEASure:HARMonic?" Sets/Queries the output of the harmonic wave voltage effective value (minimum value) output for the above query.	94
:MEASure:HARMonic:ITEM:I:ALL **:MEASure:HARMonic:ITEM:I:CH1(?)** **:MEASure:HARMonic:ITEM:I:CH2(?)** **:MEASure:HARMonic:ITEM:I:CH3(?)** **:MEASure:HARMonic:ITEM:I:CH0(?)**	<Output Setting 0/1>	":MEASure:HARMonic?" Sets/Queries the output of the harmonic wave current effective value output for the above query.	95
:MEASure:HARMonic:ITEM:I_MAX:ALL **:MEASure:HARMonic:ITEM:I_MAX:CH1(?)** **:MEASure:HARMonic:ITEM:I_MAX:CH2(?)** **:MEASure:HARMonic:ITEM:I_MAX:CH3(?)** **:MEASure:HARMonic:ITEM:I_MAX:CH0(?)**	<Output Setting 0/1>	":MEASure:HARMonic?" Sets/Queries the output of the harmonic wave current effective value (maximum value) output for the above query.	95

Message ([ ]: Can be omitted)	Data Formats (Response data for queries)	Description	Reference Page
:MEASure:HARMonic:ITEM:I_MIN:ALL **:MEASure:HARMonic:ITEM:I_MIN:CH1(?)** **:MEASure:HARMonic:ITEM:I_MIN:CH2(?)** **:MEASure:HARMonic:ITEM:I_MIN:CH3(?)** **:MEASure:HARMonic:ITEM:I_MIN:CH0(?)**	<Output Setting 0/1>	":MEASure:HARMonic?" Sets/Queries the output of the harmonic wave current effective value (minimum value) output for the above query.	95
:MEASure:HARMonic:ITEM:P:ALL **:MEASure:HARMonic:ITEM:P:CH1(?)** **:MEASure:HARMonic:ITEM:P:CH2(?)** **:MEASure:HARMonic:ITEM:P:CH3(?)** **:MEASure:HARMonic:ITEM:P:CH0(?)**	<Output Setting 0/1>	":MEASure:HARMonic?" Sets/Queries the harmonic wave active power output for the above query.	96
:MEASure:HARMonic:ITEM:P_MAX:ALL **:MEASure:HARMonic:ITEM:P_MAX:CH1(?)** **:MEASure:HARMonic:ITEM:P_MAX:CH2(?)** **:MEASure:HARMonic:ITEM:P_MAX:CH3(?)** **:MEASure:HARMonic:ITEM:P_MAX:CH0(?)**	<Output Setting 0/1>	":MEASure:HARMonic?" Sets/Queries the harmonic wave active power (maximum value) output for the above query.	96
:MEASure:HARMonic:ITEM:P_MIN:ALL **:MEASure:HARMonic:ITEM:P_MIN:CH1(?)** **:MEASure:HARMonic:ITEM:P_MIN:CH2(?)** **:MEASure:HARMonic:ITEM:P_MIN:CH3(?)** **:MEASure:HARMonic:ITEM:P_MIN:CH0(?)**	<Output Setting 0/1>	":MEASure:HARMonic?" Sets/Queries the harmonic wave active power (minimum value) output for the above query.	96
:MEASure:HARMonic:ITEM:UCON:ALL **:MEASure:HARMonic:ITEM:UCON:CH1(?)** **:MEASure:HARMonic:ITEM:UCON:CH2(?)** **:MEASure:HARMonic:ITEM:UCON:CH3(?)** **:MEASure:HARMonic:ITEM:UCON:CH0(?)**	<Output Setting 0/1>	":MEASure:HARMonic?" Sets/Queries the harmonic wave voltage content for the above query.	97
:MEASure:HARMonic:ITEM:UCON_MAX:ALL **:MEASure:HARMonic:ITEM:UCON_MAX:CH1(?)** **:MEASure:HARMonic:ITEM:UCON_MAX:CH2(?)** **:MEASure:HARMonic:ITEM:UCON_MAX:CH3(?)** **:MEASure:HARMonic:ITEM:UCON_MAX:CH0(?)**	<Output Setting 0/1>	":MEASure:HARMonic?" Sets/Queries the harmonic wave voltage content (maximum value) for the above query.	97
:MEASure:HARMonic:ITEM:UCON_MIN:ALL **:MEASure:HARMonic:ITEM:UCON_MIN:CH1(?)** **:MEASure:HARMonic:ITEM:UCON_MIN:CH2(?)** **:MEASure:HARMonic:ITEM:UCON_MIN:CH3(?)** **:MEASure:HARMonic:ITEM:UCON_MIN:CH0(?)**	<Output Setting 0/1>	":MEASure:HARMonic?" Sets/Queries the harmonic wave voltage content (minimum value) for the above query.	97
:MEASure:HARMonic:ITEM:ICON:ALL **:MEASure:HARMonic:ITEM:ICON:CH1(?)** **:MEASure:HARMonic:ITEM:ICON:CH2(?)** **:MEASure:HARMonic:ITEM:ICON:CH3(?)** **:MEASure:HARMonic:ITEM:ICON:CH0(?)**	<Output Setting 0/1>	":MEASure:HARMonic?" Sets/Queries the harmonic wave current content for the above query.	98
:MEASure:HARMonic:ITEM:ICON_MAX:ALL **:MEASure:HARMonic:ITEM:ICON_MAX:CH1(?)** **:MEASure:HARMonic:ITEM:ICON_MAX:CH2(?)** **:MEASure:HARMonic:ITEM:ICON_MAX:CH3(?)** **:MEASure:HARMonic:ITEM:ICON_MAX:CH0(?)**	<Output Setting 0/1>	":MEASure:HARMonic?" Sets/Queries the harmonic wave current content (maximum value) for the above query.	98
:MEASure:HARMonic:ITEM:ICON_MIN:ALL **:MEASure:HARMonic:ITEM:ICON_MIN:CH1(?)** **:MEASure:HARMonic:ITEM:ICON_MIN:CH2(?)** **:MEASure:HARMonic:ITEM:ICON_MIN:CH3(?)** **:MEASure:HARMonic:ITEM:ICON_MIN:CH0(?)**	<Output Setting 0/1>	":MEASure:HARMonic?" Sets/Queries the harmonic wave current content (minimum value) for the above query.	98
:MEASure:HARMonic:ITEM:PCON:ALL **:MEASure:HARMonic:ITEM:PCON:CH1(?)** **:MEASure:HARMonic:ITEM:PCON:CH2(?)** **:MEASure:HARMonic:ITEM:PCON:CH3(?)** **:MEASure:HARMonic:ITEM:PCON:CH0(?)**	<Output Setting 0/1>	":MEASure:HARMonic?" Sets/Queries the harmonic wave active power content for the above query.	99

Message ([ ]: Can be omitted)	Data Formats (Response data for queries)	Description	Reference Page
:MEASure:HARMonic:ITEM:PCON_MAX:ALL **:MEASure:HARMonic:ITEM:PCON_MAX:CH1(?)** **:MEASure:HARMonic:ITEM:PCON_MAX:CH2(?)** **:MEASure:HARMonic:ITEM:PCON_MAX:CH3(?)** **:MEASure:HARMonic:ITEM:PCON_MAX:CH0(?)**	<Output Setting 0/1>	":MEASure:HARMonic?" Sets/Queries the harmonic wave active power content (maximum value) for the above query.	99
:MEASure:HARMonic:ITEM:PCON_MIN:ALL **:MEASure:HARMonic:ITEM:PCON_MIN:CH1(?)** **:MEASure:HARMonic:ITEM:PCON_MIN:CH2(?)** **:MEASure:HARMonic:ITEM:PCON_MIN:CH3(?)** **:MEASure:HARMonic:ITEM:PCON_MIN:CH0(?)**	<Output Setting 0/1>	":MEASure:HARMonic?" Sets/Queries the harmonic wave active power content (minimum value) for the above query.	99
:MEASure:HARMonic:ITEM:UPHAse:ALL **:MEASure:HARMonic:ITEM:UPHAse:CH1(?)** **:MEASure:HARMonic:ITEM:UPHAse:CH2(?)** **:MEASure:HARMonic:ITEM:UPHAse:CH3(?)**	<Output Setting 0/1>	":MEASure:HARMonic?" Sets/Queries the harmonic wave voltage phase angle for the above query.	100
:MEASure:HARMonic:ITEM:UPHAse_MAX:ALL **:MEASure:HARMonic:ITEM:UPHAse_MAX:CH1(?)** **:MEASure:HARMonic:ITEM:UPHAse_MAX:CH2(?)** **:MEASure:HARMonic:ITEM:UPHAse_MAX:CH3(?)**	<Output Setting 0/1>	":MEASure:HARMonic?" Sets/Queries the harmonic wave voltage phase angle (maximum value) for the above query.	100
:MEASure:HARMonic:ITEM:UPHAse_MIN:ALL **:MEASure:HARMonic:ITEM:UPHAse_MIN:CH1(?)** **:MEASure:HARMonic:ITEM:UPHAse_MIN:CH2(?)** **:MEASure:HARMonic:ITEM:UPHAse_MIN:CH3(?)**	<Output Setting 0/1>	":MEASure:HARMonic?" Sets/Queries the harmonic wave voltage phase angle (minimum value) for the above query.	100
:MEASure:HARMonic:ITEM:IPHAse:ALL **:MEASure:HARMonic:ITEM:IPHAse:CH1(?)** **:MEASure:HARMonic:ITEM:IPHAse:CH2(?)** **:MEASure:HARMonic:ITEM:IPHAse:CH3(?)**	<Output Setting 0/1>	":MEASure:HARMonic?" Sets/Queries the harmonic wave current phase angle for the above query.	101
:MEASure:HARMonic:ITEM:IPHAse_MAX:ALL **:MEASure:HARMonic:ITEM:IPHAse_MAX:CH1(?)** **:MEASure:HARMonic:ITEM:IPHAse_MAX:CH2(?)** **:MEASure:HARMonic:ITEM:IPHAse_MAX:CH3(?)**	<Output Setting 0/1>	":MEASure:HARMonic?" Sets/Queries the harmonic wave current phase angle (maximum value) for the above query.	101
:MEASure:HARMonic:ITEM:IPHAse_MIN:ALL **:MEASure:HARMonic:ITEM:IPHAse_MIN:CH1(?)** **:MEASure:HARMonic:ITEM:IPHAse_MIN:CH2(?)** **:MEASure:HARMonic:ITEM:IPHAse_MIN:CH3(?)**	<Output Setting 0/1>	":MEASure:HARMonic?" Sets/Queries the harmonic wave current phase angle (minimum value) for the above query.	101
:MEASure:HARMonic:ITEM:PPHAse:ALL **:MEASure:HARMonic:ITEM:PPHAse:CH1(?)** **:MEASure:HARMonic:ITEM:PPHAse:CH2(?)** **:MEASure:HARMonic:ITEM:PPHAse:CH3(?)**	<Output Setting 0/1>	":MEASure:HARMonic?" Sets/Queries the harmonic wave voltage current phase difference for the above query.	102
:MEASure:HARMonic:ITEM:PPHAse_MAX:ALL **:MEASure:HARMonic:ITEM:PPHAse_MAX:CH1(?)** **:MEASure:HARMonic:ITEM:PPHAse_MAX:CH2(?)** **:MEASure:HARMonic:ITEM:PPHAse_MAX:CH3(?)**	<Output Setting 0/1>	":MEASure:HARMonic?" Sets/Queries the harmonic wave voltage current phase difference (maximum value) for the above query.	102
:MEASure:HARMonic:ITEM:PPHAse_MAX:ALL **:MEASure:HARMonic:ITEM:PPHAse_MIN:CH1(?)** **:MEASure:HARMonic:ITEM:PPHAse_MIN:CH2(?)** **:MEASure:HARMonic:ITEM:PPHAse_MIN:CH3(?)**	<Output Setting 0/1>	":MEASure:HARMonic?" Sets/Queries the harmonic wave voltage current phase difference (minimum value) for the above query.	102

Device-specific Commands (Communications)

Message ([ ]: Can be omitted)	Data Formats (Response data for queries)	Description	Reference Page
:RS232c?		Queries the RS232-C setting items.	103
:RS232c:BAUD **:RS232c:BAUD?**	<RS Baud Rate>	Sets/Queries the RS232-C baud rate.	103
:RS232c:ANSWer **:RS232c:ANSWer?**	ON/OFF	Sets/Queries the execution confirmation message.	104
:RS232c:ERRor?		Sets/Queries RS232-C communications errors.	104
:IP:ADDRess **:IP:ADDRess?**	(<Address 1 (NR1)>, <Address 2 (NR1)>, <Address 3 (NR1)>, <Address 4 (NR1)>)	Sets/Queries the LAN IP address.	105
:IP:DEFaultgateway **:IP:DEFaultgateway?**	(<Address 1 (NR1)>, <Address 2 (NR1)>, <Address 3 (NR1)>, <Address 4 (NR1)>)	Sets/Queries the LAN default gateway.	105
:IP:SUBNetmask **:IP:SUBNetmask?**	(<Address 1 (NR1)>, <Address 2 (NR1)>, <Address 3 (NR1)>, <Address 4 (NR1)>)	Sets/Queries the LAN subnet mask.	105
:GPIB?		Queries the GP-IB setting items.	106
:GPIB:ADDRess **:GPIB:ADDRess?**	<Address (NR1)>	Sets/Queries the GP-IB address.	106
:HEADer **:HEADer?**	ON/OFF	Sets/Queries the header.	106
:LOCAL **:LOCAL?**	0/1 (NR1)	Changes to the Local (manual operation) state. Queries the Local/Remote state.	106
:TRANsmit:SEParator **:TRANsmit:SEParator?**	0/1 (NR1)	Sets/Queries the message unit separator.	107
:TRANsmit:TERMinator **:TRANsmit:TERMinator?**	0/1 (NR1)	Sets/Queries the message unit terminator.	107

3 Message Reference

Message Reference Interpretation

< >: Indicates the contents (character or numeric parameters) of the data portion of a message. Character parameters are returned as all capital letters.

Numeric Parameters :

- NRf Number format may be any of NR1, NR2 and NR3
- NR1 Integer data (e.g.: +12, -23, 34)
- NR2 Fixed-point data (e.g.: +1.23, -23.45, 3.456)
- NR3 Floating-point exponential representation data (e.g.: +1.0E-2, -2.3E+4)

Shows the command description.

Shows the message syntax. Explains the command data or response message.

Describes the message.

Shows an example of an actual command application. This description is normally when HEADER ON is set.

Read/Write the Standard Event Status Enable Register (SESER)

Syntax

Command ***ESE <0 ～ 255 (NR1)>**

Query ***ESE?**

Response <0 ～ 255 (NR1)>

Description

Command The SESER mask is set to the numerical value 0 to 255. The initial value (at power-on) is 0.

Query The contents of the SESER, as set by the *ESE command, are returned as an NR1 value (0 to 255).

128	64	32	16	8	4	2	1
bit 7	bit 6	bit 5	bit 4	bit 3	bit 2	bit 1	bit 0
PON	URQ	CME	EXE	DDE	QYE	RQC	OPC

Example ***ESE 36**

(Sets bits 5 and 2 of SESER)

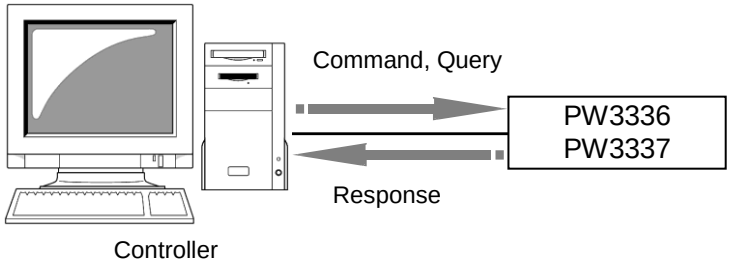

Standard Commands

(1) System Data Command

Query Device ID (Identification Code)

Syntax Query ***IDN?**

Response <Manufacturer name>, <Model name>, <Model type>, <Software version>, <Serial number>

<Manufacturer name>	"HIOKI"	Fixed
<Model name>	"PW3336"	No. of channels: 2
	"PW3337"	No. of channels: 3

<Model type>	GP-IB	D/A output
00	-	-
01	●	-
02	-	●
03	●	●

Example Query ***IDN?**

Response **HIOKI,PW3337,03,V1.00,ser123456789**

The Device ID is HIOKI PW3337-03 (GP-IB, with D/A output), software version 1.00, 123456789.

Note
- The response message has no header.

"*IDN?" must be the last query message in a program message.
- Therefore, if any other query is detected after this query on the same line, a query error will occur and no response message will be output.

Query Device Options

Syntax Query ***OPT?**

Response <IF type>, <D/A output capability>

<IF type>	GPIB/NONE
<D/A output capability>	DA_OUT/NONE

Description Queries the options available on the instrument.

Example Query ***OPT?**

Response **GPIB,DA_OUT**

The instrument uses the GP-IB interface and is capable of D/A output.

Note
- The response message has no header.

(2) Internal Operation Command

Initialize Device

Syntax Command ***RST**

Description Command Resets the instrument to its initial state.

Note
- Refer to the user's manual for the instrument (in the System Reset section) for information about the initial settings.
- The communications state is not initialized.
- This command can be executed even when a system error has occurred.

Execute Self-test and Query Result

Syntax Query ***TST?**

Response <0 ～ 4 (NR1)>

0:No error
1:ROM error
2:RAM error
3:FPGA error
4:Backup data error

Description Perform the instrument self-test and return the result as a numerical value 0 to 4. Returns zero when no error occurs.

Example Query ***TST?**

Response **2**

A RAM error was detected.
The instrument may not be able to perform measurements correctly.
Stop use immediately and send the instrument in for repairs.

Note
- The response message has no header.
- A device-dependent error will occur if this command is executed during integration (when the INTEGRATOR indicator is lit) or when in the Hold state (when the HOLD indicator is lit).
- This command can be executed even when a system error has occurred.

(3) Synchronization Commands

Set OPC Bit of SESR when Finished with All Pending Operations

Syntax Command ***OPC**

Description Sets OPC bit 0 of the Standard Event Status Register (SESR) when all commands prior to ***OPC** have finished processing.

Example **:MEAS?;*OPC**

Sets the OPC bit of the SESR after the :MEAS? query finishes processing.

Respond with ASCII "1" when Finished with All Pending Operations

Syntax Query ***OPC?**

Response **1**

Description Responds with ASCII "1" when all commands prior to ***OPC** have finished processing.

Example **:MEAS?;*OPC?**

"1" is stored in the output queue after the data for the :MEAS? query is generated.

Note
- The response message has no header.

Wait until display update finishes before executing the next command.

Syntax Command ***WAI**

Description No commands after *WAI are run until the next display update completes. (200ms max)

Example **:MEAS?;*WAI;:MEAS?**

Data is loaded after each display update.

Note
- The displayed data will not be updated even if this command is executed, while the display is held, the maximum/minimum values are being held, and the averaged values are displayed.
- The display data will not be updated even during a range switch (“-----“ display) even if this command is executed.

(4) Status and Event Control Commands

Clear Event Register, Status Byte Register (Except Output Queue)

Syntax Command ***CLS**

Description Clears the event status registers. The Status Byte Register bits corresponding to the event status registers are also cleared. (**SESR, ESR0, ESR1, ESR2, ESR3, RS232c:ERRor**)

Note
・The output queue, enable registers, and bit 4 of the status byte register (MAV) are not affected.
・This command can be executed even when a system error has occurred.

Read/Write the Standard Event Status Enable Register (SESER)

Syntax
Command ***ESE <0～255(NR1)>**
Query ***ESE?**
Response <0～255(NR1)>

Description
Command
The SESER mask is set to the numerical value 0 to 255.
The initial value (at power-on) is 0.
Although NRf numerical values are accepted, values to the right of the decimal are rounded to the nearest integer.
URQ (bit 6) and RQC (bit 1) is not used by the instrument. Therefore, these events will not be triggered even if a value of 1 is specified.
Query
The contents of the SESER, as set by the ***ESE** command, are returned as an NR1 value (0 to 255).

128	64	32	16	8	4	2	1
bit 7	bit 6	bit 5	bit 4	bit 3	bit 2	bit 1	bit 0
PON	URQ	CME	EXE	DDE	QYE	RQC	OPC

Example
Command ***ESE 36**
(Sets bits 5 and 2 of SESER)
Query ***ESE?**
Response (When HEADER ON) ***ESE 36**
(When HEADER OFF) **36**

Read and Clear Standard Event Status Register (SESR)

Syntax
Query ***ESR?**
Response <0～255 (NR1)>

Description Returns the contents of the SESR as an NR1 value from 0 to 255, then clears register contents.
The response message has no header.

128	64	32	16	8	4	2	1
bit 7	bit 6	bit 5	bit 4	bit 3	bit 2	bit 1	bit 0
PON	URQ	CME	EXE	DDE	QYE	RQC	OPC

Example ***ESR?**
32
Bit 5 of the SESR has been set to 1. →A CME (Command Error) has occurred.

Note
・This command can be executed even when a system error has occurred.

Write and Read Standard Event Status Enable Register (SRER)

Syntax

Command ***SRE <0～255 (NR1)>**

Query ***SRE?**

Response <0～255 (NR1)>

Description

Command

The SRER mask is set to the numerical value 0 to 255.
Although NRf numerical values are accepted, values to the right of the decimal are rounded to the nearest integer.
Bit 6 and unused bits (bit 7) are ignored.
The data is initialized to zero at power-on.

Query

The contents of the SRER, as set by the ***SRE** command, are returned as an NR1 value (0 to 255). Bit 6 and unused bits (bit 7) always return as zero.

128	64	32	16	8	4	2	1
bit 7	bit 6	bit 5	bit 4	bit 3	bit 2	bit 1	bit 0
unused	0	ESB	MAV	ESB3	ESB2	ESB1	ESB0

Example

Command ***SRE 33**

Set SRER bits 0 and 5 to 1.

Query ***SRE?**

Response (When HEADER ON) ***SRE 33**

(When HEADER OFF) **33**

SRER bits 0 and 5 have been set to 1.

Read Status Byte and MSS Bit

Syntax

Query ***STB?**

Response <0～127 (NR1)>

Description

The contents of the STB are returned as an NR1 value (0 to 255).
The response message has no header.

128	64	32	16	8	4	2	1
bit 7	bit 6	bit 5	bit 4	bit 3	bit 2	bit 1	bit 0
unused	MSS	ESB	MAV	ESB3	ESB2	ESB1	ESB0

Example

Query ***STB?**

Response (When HEADER ON) **16**

(When HEADER OFF) **16**

STB bit 4 has been set to 1.

Note

・The value of bit 6 is the value of the MSS bit.
・The MSS bit will not be cleared even if the service requests have been cleared through serial polling.
・This command can be executed even when a system error has occurred.

Request a Sample

Syntax

Command ***TRG**

Description

Updates the measurement display once when the instrument is in the Hold state.

Example

:HOLD ON;*TRG;:MEAS?

Note

・A device-dependent error occurs if this command is executed in any other state than the Hold state.
・While the averaged value is displayed, the displayed averaged value is updated by executing this command.

Device-specific Commands

(1) Event Status Register

Set and Query Device-specific Event Status Enable Register ESER0

Syntax

Command **:ESE0 <0～255 (NR1)>**

Query **:ESE0?**

Response <0～255 (NR1)>

Description

Command

Sets the mask pattern in Event Status Enable Register 0 (ESER0) for the Event Status Register.
Although NRf numerical values are accepted, values to the right of the decimal are rounded to the nearest integer.

128	64	32	16	8	4	2	1
bit 7	bit 6	bit 5	bit 4	bit 3	bit 2	bit 1	bit 0
DS	CSE	SE	IE	AVG	HP	ODI	ESE

Example

Command **:ESE0 4**

Set ESER0 bit 2 to 1.

Query **:ESE0?**

Response (When HEADER ON) **:ESE0 4**

(When HEADER OFF) **4**

Note The data is initialized to zero at power-on.

Set and Query Device-specific Event Status Enable Register ESER1

Syntax

Command **:ESE1 <0～255 (NR1)>**

Query **:ESE1?**

Response <0～255 (NR1)>

Description

Command

Sets the mask pattern in Event Status Enable Register 1 (ESER1) for the Event Status Register.
Although NRf numerical values are accepted, values to the right of the decimal are rounded to the nearest integer.

128	64	32	16	8	4	2	1
bit 7	bit 6	bit 5	bit 4	bit 3	bit 2	bit 1	bit 0
FOR1	ODI1	CODI1	IO1	OU1	HP1	HI1	HU1

Example

Command **:ESE1 24**

Set ESER1 bits 3 and 4 to 1.

Query **:ESE1?**

Response (When HEADER ON) **:ESE1 24**

(When HEADER OFF) **24**

Note The data is initialized to zero at power-on.

Set and Query Device-specific Event Status Enable Register ESER2

Syntax

Command **:ESE2 <0～255 (NR1)>**

Query **:ESE2?**

Response <0～255 (NR1)>

Description

Command

Sets the mask pattern in Event Status Enable Register 2 (ESER2) for the Event Status Register.
Although NRf numerical values are accepted, values to the right of the decimal are rounded to the nearest integer.

128	64	32	16	8	4	2	1
bit 7	bit 6	bit 5	bit 4	bit 3	bit 2	bit 1	bit 0
FOR2	ODI2	CODI2	IO2	OU2	HP2	HI2	HU2

Example

Command **:ESE2 96**

Set ESER2 bits 5 and 6 to 1.

Query **:ESE2?**

Response (When HEADER ON) **:ESE2 96**

(When HEADER OFF) **96**

Note The data is initialized to zero at power-on.

Set and Query Device-specific Event Status Enable Register ESER3

Syntax

Command **:ESE3 <0～255 (NR1)>**

Query **:ESE3?**

Response <0～255 (NR1)>

Description

Command

Sets the mask pattern in Event Status Enable Register 3 (ESER3) for the Event Status Register.
Although NRf numerical values are accepted, values to the right of the decimal are rounded to the nearest integer.

128	64	32	16	8	4	2	1
bit 7	bit 6	bit 5	bit 4	bit 3	bit 2	bit 1	bit 0
FOR3	ODI3	CODI3	IO3	OU3	HP3	HI3	HU3

Example

Command **:ESE3 15**

Set ESER3 bits 0, 1, 2, and 3 to 1.

Query **:ESE3?**

Response (When HEADER ON) **:ESE3 15**

(When HEADER OFF) **15**

Note The data is initialized to zero at power-on.

Set and Query Device-specific Event Status Enable Registers ESER0 to ESER3

Syntax

Query **:ESR0?**
:ESR1?
:ESR2?
:ESR3?

Response <0～255 (NR1)>

Description

Command Returns the contents of the Event Status Register in NR1 format.

Note

- When ESR0? is executed, the content of ESR0 is cleared.
- When ESR1? is executed, the content of ESR1 is cleared.
- When ESR2? is executed, the content of ESR2 is cleared.
- When ESR3? is executed, the content of ESR3 is cleared.

(2) Measurement Settings

Setting and Querying Wiring Settings

Syntax

Command **:WIRing <Wiring type>**

Query **:WIRing?**

Response <Wiring type>

Wiring Type	PW3337	PW3336
TYPE1	1P2W × 3	1P2W × 2
TYPE2	1P3W, 1P2W	1P3W,
TYPE3	3P3W, 1P2W	3P3W
TYPE4	3P3W2M	3P3W2M
TYPE5	3V3A	
TYPE6	3P3W3M	
TYPE7	3P4W	
1	Same as TYPE2. Can only be set.	
2	Same as TYPE4. Can only be set.	

Description

Sets or queries the wiring type.
The response returns the wiring type in the format of TYPE1 to TYPE7.

Example

Command **:WIRING TYPE1**
Sets the wiring type to TYPE1.

Query **:WIR?**

Response (When HEADER ON) **:WIRING TYPE1**
(When HEADER OFF) **TYPE1**

Note

・For all wiring types other than 1P2W, any items that can be set for each individual channel (such as the measurement range) are unified with the setting for CH1.
・You cannot change the wiring type during integration, while the display is held, or when the maximum/minimum values are being held.

Setting and Querying Wiring Settings (3331-compatible)

Syntax

Command **:MODE <Wiring type>**

Query **:MODE?**

Response <Wiring type>
This is the same as **"WIRing".**

Description

Sets or queries the wiring type.
The response returns the wiring type in the format of TYPE1 to TYPE7.

Example

Command **:MODE 1**
Sets the wiring type to 1P3W (TYPE2).

Query **:MODE?**

Response (When HEADER ON) **:MODE TYPE2**
(When HEADER OFF) **TYPE2**

Note

・For all wiring types other than 1P2W, any items that can be set for each individual channel (such as the measurement range) are unified with the setting for CH1.
・You cannot change the wiring type during integration, while the display is held, or when the maximum/minimum values are being held.

Setting and Querying the Number of Times to Perform Averaging

Syntax

Command **:AVERaging** **<Number of times to perform averaging (NR1)>**

Query **:AVERaging?**

Response <Number of times to perform averaging (NR1)>
1/2/5/10/25/50/100

Description

Sets or queries the number of times to perform averaging.
Although NRf numerical values are accepted, values to the right of the decimal are rounded to the nearest integer.

Example

Command **:AVER 10**
Set the number of times to perform averaging to 10.

Query **:AVER?**

Response (When HEADER ON) **:AVERAGING 10**
(When HEADER OFF) **10**

Note

- When the number of times to perform averaging is changed, averaging restarts.
- You cannot change this setting while the display is held or when the maximum/minimum values are being held.

Querying the Integration Set Time and Status

Syntax Query **:INTEGrate?**

Response <0000 to 9999 (NR1)>,<00 to 59 (NR1)>;<Integration status>

Description Returns the integration set time (hours, minutes) and the status of integration calculations as a numerical value and string, respectively. See “:INTEGrage:TIME?”, ”INTEGrage:STATe?” for details on the return values.

Example Query **:INTEG?**

Response (When HEADER ON) **:INTEGRATE:TIME 0100,00,STATE START**

(When HEADER OFF) **0100,00;START**

Note ・You can use the :TRANsmit:SEParator command to change the message unit separator from a semicolon ";" to a comma ",".

Set and Query the Integration Status

Syntax Command **:INTEGrate:STATe <Integration status>**

Query **:INTEGrate:STATe?**

Response <Integration status>

START/STOP/RESET

Description Query Indicates the integration operation.

Response Returns the integration status as a string.

Example Command **:INTEG:STAT START**

Starts the integration operation.

Query **:INTEG:STAT?**

Response (When HEADER ON) **:INTEGRATE:STATE START**

(When HEADER OFF) **START**

Note ・Depending on the integration state, a device-dependent error may occur (see the table below).

・A device-dependent error will occur if the integration value reaches ±999999M or if the integration time reaches 10,000 hours.

		Instrument Status				
		RUN Indicator EXT Indicator OFF (Reset state)	Key input (command) EXT Indicator OFF		Integration from an External Terminal EXT Indicator ON	
			RUN Indicator ON (Integration in progress)	RUN Indicator Flashing (Stopped)	RUN indicator ON (Integration in progress)	RUN indicator Flashing (Stopped)
Command	START	○	×	○	×	×
	STOP	×	○	×	×	×
	RESET	○	×	○	×	○

○: The command is executed.

×: A device-dependent error occurs.

Set and Query the Integration Time

Syntax

Command **:INTEGrate:TIME <0000 to 9999 (NR1)>,<00to 59 (NR1)>**

Query **:INTEGrate:TIME?**

Response <0000 to 9999(NR1)>,<00 to 59(NR1)>

Description

Sets or queries the hours and minutes for the integration time.
The setting range is 1 minute to 9,999 hours and 59 minutes. The unit is 1 minute.
If the integration time is set to 0 hours and 0 minutes, integration is performed for 10,000 hours (approximately 417 days).
Although NRf numerical values are accepted, values to the right of the decimal are rounded to the nearest integer.

Example

Command **:INTEG:TIME 100,20**

Sets the integration time to 100 hours and 20 minutes.

Query **:INTEG:TIME?**

Response
(When HEADER ON) **:INTEGRATE:TIME 0100,20**
(When HEADER OFF) **0100,20**

Note

・You cannot change this setting during integration, while the display is held, or when the maximum/minimum values are being held.

Set and Query the Harmonic Wave Analysis Order Upper Limit

Syntax

Command **:HARMonic:ORDer:UPPer <2 to 50 (NR1)>**

Query **:HARMonic:ORDer:UPPer?**

Response <2 to 50 (NR1)>

Description

Sets or queries the upper limit for the harmonic wave analysis order.
Although NRf numerical values are accepted, values to the right of the decimal are rounded to the nearest integer.

Example

Command **:HARM:ORD:UPP 50**

Sets the upper limit for the harmonic wave analysis order to 50.

Query **:HARM:ORD:UPP?**

Response
(When HEADER ON) **:HARMONIC:ORDER:UPPER 50**
(When HEADER OFF) **50**

Note

・You cannot change this setting during integration, while the display is held, or when the maximum/minimum values are being held.

Set and Query the Display Hold Status

Syntax

Command **:HOLD <ON/OFF/MAX/MIN/RESET>**

Query **:HOLD?**

Response <ON/OFF/MAX/MIN/RESET>

ON	Keeps the current display value (display hold state).
OFF	Releases the currently held display value.
MAX	Displays the maximum value (maximum value hold).
MIN	Displays the minimum value (minimum value hold).
RESET	Resets the maximum, minimum, and averaged values.

Description

Command
Specifies the type of hold to perform on the display value or resets the maximum and minimum values.
Although NRf numerical values are accepted, values to the right of the decimal are rounded to the nearest integer.

Query
Returns the current display value hold setting.

Example

Command **:HOLD ON**

Holds the current display value.

Query **:HOLD?**

Response
(When HEADER ON) **:HOLD ON**
(When HEADER OFF) **ON**

Execute and Query Zero Adjustment (Degaussing)

Syntax

Command **:DEMAg**

Query **:DEMAg?**

Response <OK/BUSY/ERROR>

OK	Operation completed successfully.
BUSY	Currently performing a zero adjustment (degauss).
ERROR	Zero adjustment failed.

Description

Command Performs a zero adjustment (degauss).

Query Returns the zero adjustment (degauss) execution results or current status.

Example

Command **:DEMA**

Query **:DEMA?**

Response (When HEADER ON) **:DEMAG OK**

(When HEADER OFF) **OK**

Note

・Some time is required to perform a zero adjustment (approximately 40 seconds). During this time, some commands may result in an execution error. Use this command in such a way that the next command is sent only after the zero adjustment (degaussing)is complete. For example, "**:DEMAG;*WAI**".

・If a zero adjustment (degauss) has not been performed since the instrument was powered on, **:DEMAg?** will return "OK".

Set and Query the Multiple Instrument Synchronization Control Function

Syntax

Command **:SYNC:CONTrol <OFF/IN/OUT>**

Query **:SYNC:CONTrol?**

Response <OFF/IN/OUT>

OFF	Turns OFF the synchronization control function.
IN	Sets the instrument as the slave device.
OUT	Sets the instrument as the master device.

Description

Command Sets or queries the I/O settings for multiple device synchronization control.

Example

Command **:SYNC:CONT OUT**

Query **:SYNC:CONT?**

Response (When HEADER ON) **:SYNC:CONTROL OUT**

(When HEADER OFF) **OUT**

Note

・Reset the integration value for both the master and slaves before starting synchronized measurement of integration.

(3) Voltage Range

Query the Voltage Range and Auto Range

Syntax

Query

ch1	**:VOLTage?**
ch1	**:VOLTage1?**
ch2	**:VOLTage2?**
ch3	**:VOLTage3?**

Response <Voltage range (NR1)>;<Auto range ON/OFF>

Description

Queries the voltage range setting.

Example

Query **:VOLT1?**

Response (When HEADER ON) **:VOLTAGE1:RANGE 15;AUTO ON**

(When HEADER OFF) **15; ON**

Note

・You can use the :TRANsmit:SEParator command to change the message unit separator from a semicolon ";" to a comma ",".

Set and Query the Voltage Auto Range

Syntax

Command	All Channels	**:VOLTage:AUTO <ON/OFF>**
	ch1	**:VOLTage1:AUTO <ON/OFF>**
	ch2	**:VOLTage2:AUTO <ON/OFF>**
	ch3	**:VOLTage3:AUTO <ON/OFF>**
Query	ch1	**:VOLTage:AUTO?**
	ch1	**:VOLTage1:AUTO?**
	ch2	**:VOLTage2:AUTO?**
	ch3	**:VOLTage3:AUTO?**
Response	<ON/OFF>	
	ON	Measures the voltage in an automatic range.
	OFF	Turns off the voltage automatic range operation.

Description

Command: Turns ON or OFF the voltage auto range.

Query: Returns the voltage auto range setting.

Example

Command: **:VOLT1:AUTO ON**

Query: **:VOLT1:AUTO?**

Response: (When HEADER ON) **:VOLTAGE1:AUTO ON**

(When HEADER OFF) **ON**

Note

- If you set the voltage range via a command such as :VOLTage:RANGe, the auto range operation will be turned OFF for the specified channel.
- You cannot change this setting during integration, while the display is held, or when the maximum/minimum values are being held.

Set and Query the Voltage Range Setting

Syntax

Command	All Channels	**:VOLTage:RANGe <Voltage Range (NR1)>**
	ch1	**:VOLTage1:RANGe <Voltage Range (NR1)>**
	ch2	**:VOLTage2:RANGe <Voltage Range (NR1)>**
	ch3	**:VOLTage3:RANGe <Voltage Range (NR1)>**
Query	ch1	**:VOLTage:RANGe?**
	ch1	**:VOLTage1:RANGe?**
	ch2	**:VOLTage2:RANGe?**
	ch3	**:VOLTage3:RANGe?**
Response	<Voltage range (NR1)>	

<Voltage range (NR1)> = 15/30/60/150/300/600/1000

Description

Command: Sets the voltage range setting. (The unit is in volts [V].)
The numerical value is accepted in NRf format, but any data after the decimal point is rounded off.

Query: Returns the voltage range setting in NR1 format.

Example

Command: **:VOLT1:RANG 15**

Query: **:VOLT1:RANG?**

Response: (When HEADER ON) **:VOLTAGE1:RANGE 15**

(When HEADER OFF) **15**

Note

- Do not append a unit to the voltage range.
- After you change the range, wait a few moments until the internal circuitry stabilizes before you read any measurement values.
- If a negative value is specified, the absolute value will be used.
- If the number of times to perform averaging is set to any value other than 1 and the range is changed, averaging is restarted and the maximum and minimum values are reset.
- If any value other than <Voltage range (NR1)> is specified, the set value will be set to the range that can be measured.
  However, if the specified value exceeds the full scale of the range, the next highest range will be set instead.
- If a range is specified, the auto range operation is turned OFF.
- You cannot change this setting during integration, while the display is held, or when the maximum/minimum values are being held.

(4) Current Range

Batch Query of Current Range Settings

Syntax

Query	ch1	**:CURRent?**
	ch1	**:CURRent1?**
	ch2	**:CURRent2?**
	ch3	**:CURRent3?**
Response	<Current range (NR2)>;<Auto range ON/OFF>,<Current sensor type>,<Current sensor range>	

Description

Queries the current range setting.

Example

Query **:CURR1?**

Response (When HEADER ON) **:CURRENT1:RANGE 0.2;AUTO OFF; TYPE TYPE2;EXTRANGE C50**

(When HEADER OFF) **0.2; OFF; TYPE2; C50**

Note

・You can use the :TRANsmit:SEParator command to change the message unit separator from a semicolon ";" to a comma ",".

・See the sections on :CURRent:RANGe,AUTO,TYPe,EXTRange for details on the responses for this query.

Query the Current Auto Range Setting

Syntax

Command	All Channels	**:CURRent:AUTO <ON/OFF>**
	ch1	**:CURRent1:AUTO <ON/OFF>**
	ch2	**:CURRent2:AUTO <ON/OFF>**
	ch3	**:CURRent3:AUTO <ON/OFF>**
Query	ch1	**:CURRent:AUTO?**
	ch1	**:CURRent1:AUTO?**
	ch2	**:CURRent2:AUTO?**
	ch3	**:CURRent3:AUTO?**
Response	<ON/OFF>	
	ON	Measures the current in an automatic range.
	OFF	Turns off the current automatic range operation.

Description

Command Turns ON or OFF the current auto range.

Query Returns the current auto range setting.

Example

Command **:CURR1:AUTO ON**

Query **:CURR1:AUTO?**

Response (When HEADER ON) **:CURRENT1:AUTO ON**

(When HEADER OFF) **ON**

Note

・If you set the current range via a command such as :CURRent:RANGe, the auto range operation will be turned OFF for the specified channel.

・You cannot change this setting during integration, while the display is held, or when the maximum/minimum values are being held.

Set and Query the Current Range Setting

Syntax

Command	All Channels	**:CURRent:RANGe**	**<Current range (NR2)>**
	ch1	**:CURRent1:RANGe**	**<Current range (NR2)>**
	ch2	**:CURRent2:RANGe**	**<Current range (NR2)>**
	ch3	**:CURRent3:RANGe**	**<Current range (NR2)>**
Query	ch1	**:CURRent:RANGe?**	
	ch1	**:CURRent1:RANGe?**	
	ch2	**:CURRent2:RANGe?**	
	ch3	**:CURRent3:RANGe?**	
Response	<Current range (NR2)>		

<Current range (NR2)> = 0.2/0.5/1.0/2.0/5.0/10.0/20.0/50.0

Description

Command: Sets the current range setting. (The unit used for current is amperes [A].)
Although NRf numerical values are accepted,
values to the right of four decimal places are rounded off.

Query: Returns the current range setting in NR1 format.

Example

Command: **:CURR1:RANG 0.2**

Query: **:CURR1:RANG?**

Response: (When HEADER ON) **:CURRENT1:RANGE 0.2**
(When HEADER OFF) **0.2**

Note

- Do not append a unit to the current range.
- After you the change the range, wait a few moments until the internal circuitry stabilizes before you read any measurement values.
- If a range is specified, the auto range operation is turned OFF.
- If the number of times to perform averaging is set to any value other than 1 and the range is changed, averaging is restarted and the maximum and minimum values are reset.
- If any value other than <Current range (NR2)> is specified, the set value will be set to the range that can be measured.
However, if the specified value exceeds the full scale of the range, the next highest range will be set instead.
- If a negative value is specified, the absolute value will be used.
- You cannot change this setting during integration, while the display is held, or when the maximum/minimum values are being held.
- If you are using a current sensor, use the :CURRent:EXTRange(?) command.

Set and Query External Current Sensor Input

Syntax

Command	All Channels	**:CURRent:TYPe**	**<External Current Sensor Type>**
	ch1	**:CURRent1:TYPe**	**<External Current Sensor Type>**
	ch2	**:CURRent2:TYPe**	**<External Current Sensor Type>**
	ch3	**:CURRent3:TYPe**	**<External Current Sensor Type>**
Query	ch1	**:CURRent:TYPe?**	
	ch1	**:CURRent1:TYPe?**	
	ch2	**:CURRent2:TYPe?**	
	ch3	**:CURRent3:TYPe?**	
Response	<External current sensor type>		

<External current sensor type> = OFF/TYPE1/TYPE2

Description

Command: Sets the external current sensor type.

Query: Returns the current sensor range setting as a string.

Example

Command: **:CURR1:TYPE TYPE1**

Query: **:CURR1:TYPE?**

Response: (When HEADER ON) **:CURRENT1:TYPE TYPE1**
(When HEADER OFF) **TYPE1**

Note

- After you change this setting, wait a few moments until the internal circuitry stabilizes before you read any measurement values.
- If a range is specified, the auto range operation is turned OFF.
- If the number of times to perform averaging is set to any value other than 1 and the range is changed, averaging is restarted and the maximum and minimum values are reset.
- You cannot change this setting during integration, while the display is held, or when the maximum/minimum values are being held.

Set and Query the Current Range (When Using an External Current Sensor)

Syntax

Command	All Channels	**:CURRent:EXTRange <External Current Sensor Range>**
	ch1	**:CURRent1:EXTRange <External Current Sensor Range>**
	ch2	**:CURRent2:EXTRange <External Current Sensor Range>**
	ch3	**:CURRent3:EXTRange <External Current Sensor Range>**
Query	ch1	**:CURRent:EXTRange?**
	ch1	**:CURRent1:EXTRange?**
	ch2	**:CURRent2:EXTRange?**
	ch3	**:CURRent3:EXTRange?**
Response		<External current sensor range>

<External current sensor range> = C10/C20/C50

Description

Command: Sets the external current range.
Unlike other commands such as :CURRent:RANGe, an error will occur if any value other than the above <External current sensor range> is specified.

Query: Returns the external current sensor range setting as a string.

Example

Command: **:CURR1:EXTR C50**

Query: **:CURR1:EXTR?**

Response: (When HEADER ON) **:CURRENT1:EXTRANGE C50**
(When HEADER OFF) **C50**

Note

- After you the change the range, wait a few moments until the internal circuitry stabilizes before you read any measurement values.
- If a range is specified, the auto range operation is turned OFF.
- If the number of times to perform averaging is set to any value other than 1 and the range is changed, averaging is restarted and the maximum and minimum values are reset.
- An error will occur if any value other than the above <External current sensor range> is specified.
- You cannot change this setting during integration, while the display is held, or when the maximum/minimum values are being held.

(5) Frequency Range (Zero-crossing Filter)

Query the Frequency Range

Syntax

Query	ch1	**:FREQuency?**
	ch1	**:FREQuency1?**
	ch2	**:FREQuency2?**
	ch3	**:FREQuency3?**
Response	<Frequency range (NR3)>	

Description
Queries the frequency range setting.

Example
Query **:FREQuency1?**
Response (When HEADER ON) **:FREQUENCY1:RANGE +500.0E+0**
(When HEADER OFF) **+500.0E+0**

Note
The frequency range and zero-crossing filter settings are linked.

Set and Query the Frequency Range

Syntax

Command	All Channels	**:FREQuency:RANGe**	**<Frequency range (NR3)>**
	ch1	**:FREQuency1:RANGe**	**<Frequency range (NR3)>**
	ch2	**:FREQuency2:RANGe**	**<Frequency range (NR3)>**
	ch3	**:FREQuency3:RANGe**	**<Frequency range (NR3)>**
Query	ch1	**:FREQuency:RANGe?**	
	ch1	**:FREQuency1:RANGe?**	
	ch2	**:FREQuency2:RANGe?**	
	ch3	**:FREQuency3:RANGe?**	
Response	<Frequency range (NR3)>		

<Frequency range (NR3)> =
+100.0E+0,+500.0E+0,+200.0E+3,+5.0E+3

Description
Command
Sets the frequency range. (The unit used for frequency is hertz [Hz].)
Although NRf numerical values are accepted, values to the right of six decimal places are rounded off.
Query
Returns the frequency range setting in NR3 format.

Example
Command **:FREQ1:RANG 500E+0**
Query **:FREQ1:RANG?**
Response (When HEADER ON) **:FREQUENCY1:RANGE +500.0E+0**
(When HEADER OFF) **+500.0E+0**

Note
- Do not append a unit to the frequency range.
- After you the change the range, wait a few moments until the internal circuitry stabilizes before you read any measurement values.
- The same setting is applied to all channels which are a part of a wiring type.
- If the number of times to perform averaging is set to any value other than 1 and the range is changed, averaging is restarted and the maximum and minimum values are reset.
- If any value other than <Frequency range (NR3)> is specified, the set value will be set to the range that can be measured.
However, if the specified value exceeds the full scale of the range, the next highest range will be set instead.
- An execution error will occur if any value that exceeds the maximum range (200 kHz) or any negative value is specified.
- You cannot change this setting during integration, while the display is held, or when the maximum/minimum values are being held.

(6) Synchronization Source

Set and Query the Synchronization Source

Syntax

Command	All Channels	**:SOURce**	**<Synchronization source>**
	ch1	**:SOURce1**	**<Synchronization source>**
	ch2	**:SOURce2**	**<Synchronization source>**
	ch3	**:SOURce3**	**<Synchronization source>**
Query	ch1	**:SOURce?**	
	ch1	**:SOURce1?**	
	ch2	**:SOURce2?**	
	ch3	**:SOURce3?**	
Response	<Synchronization source>		
	<Synchronization source> = U1/U2/U3/I1/I2/I3/DC		

Description

Sets or queries the synchronization source setting.

Example

Command	**:SOUR1 U1**	
Query	**:SOUR1?**	
Response	(When HEADER ON)	**:SOURCE1 U1**
	(When HEADER OFF)	**U1**

Note

- After you change this setting, wait a few moments until the internal circuitry stabilizes before you read any measurement values.
- The same setting is applied to all channels which are a part of a wiring type.
- If the number of times to perform averaging is set to any value other than 1 and this setting is changed, averaging is restarted and the maximum and minimum values are reset.
- You cannot change this setting during integration, while the display is held, or when the maximum/minimum values are being held.

Set and Query the Synchronization Timeout

Syntax

Command	All Channels	**:SOURce:TIMEOut**	**<Timeout value (NR2)>**
	ch1	**:SOURce1:TIMEOut**	**<Timeout value (NR2)>**
	ch2	**:SOURce2:TIMEOut**	**<Timeout value (NR2)>**
	ch3	**:SOURce3:TIMEOut**	**<Timeout value (NR2)>**
Query	ch1	**:SOURce:TIMEOut?**	
	ch1	**:SOURce1:TIMEOut?**	
	ch2	**:SOURce2:TIMEOut?**	
	ch3	**:SOURce3:TIMEOut?**	
Response	<Timeout value (NR2)>		
	<Timeout value> = 0.1/1/10		

Description

Sets or queries the synchronization timeout.
(The unit used is seconds [sec].)

Example

Command	**:SOUR1:TIMEO 1**	
Query	**:SOUR1:TIMEO?**	
Response	(When HEADER ON)	**:SOURCE1:TIMEOUT 1.0**
	(When HEADER OFF)	**1.0**

Note

- Do not append a unit to this setting.
- After you change this setting, wait a few moments until the internal circuitry stabilizes before you read any measurement values.
- The same setting is applied to all channels which are a part of a wiring type.
- If the number of times to perform averaging is set to any value other than 1 and this setting is changed, averaging is restarted and the maximum and minimum values are reset.
- You cannot change this setting during integration, while the display is held, or when the maximum/minimum values are being held.

(7) VT Ratio/CT Ratio

Query the VT Ratio and CT Ratio

Syntax

Query	ch1	**:SCALe?**
	ch1	**:SCALe1?**
	ch2	**:SCALe2?**
	ch3	**:SCALe3?**
Response	<VT ratio (NR2)>,<CT ratio(NR2)>	

Description

Queries the VT (PT) ratio and CT ratio setting values.

Example

Query **:SCAL1?**

Response (When HEADER ON) **:SCALE:VT 2.0;CT 3.000**

(When HEADER OFF) **2.0;3.000**

Set and Query the VT Ratio Setting

Syntax

Command	All Channels	**:SCALe:VT**	**<VT ratio (NR2)>**
	ch1	**:SCALe1:VT**	**<VT ratio (NR2)>**
	ch2	**:SCALe2:VT**	**<VT ratio (NR2)>**
	ch3	**:SCALe3:VT**	**<VT ratio (NR2)>**
Query	ch1	**:SCALe:VT?**	
	ch1	**:SCALe1:VT?**	
	ch2	**:SCALe2:VT?**	
	ch3	**:SCALe3:VT?**	
Response	<VT ratio (NR2)>		

<VT ratio (NR2)> = 0.1 to 1000

Description

Command

Sets the VT (PT) ratio.

Although NRf numerical values are accepted, values to the right of four decimal places are rounded off.

Query

Returns the VT ratio setting in NR2 format.

Example

Command **:SCAL1:VT 1.2**

Query **:SCAL1:VT?**

Response (When HEADER ON) **:SCALE1:VT 1.2**

(When HEADER OFF) **1.2**

Note

- The same setting is applied to all channels which are a part of a wiring type.
- If the number of times to perform averaging is set to any value other than 1 and the range is changed, averaging is restarted and the maximum and minimum values are reset.
- You cannot change this setting during integration, while the display is held, or when the maximum/minimum values are being held.
- Instead of **:SCALe:VT**, you can also use **:SCALe:PT**. (Both of these commands perform the same operation.)

Set and Query the CT Ratio Setting

Syntax

Command	All Channels	**:SCALe:CT <CT ratio (NR2)>**
	ch1	**:SCALe1:CT <CT ratio (NR2)>**
	ch2	**:SCALe2:CT <CT ratio (NR2)>**
	ch3	**:SCALe3:CT <CT ratio (NR2)>**
Query	ch1	**:SCALe:CT?**
	ch1	**:SCALe1:CT?**
	ch2	**:SCALe2:CT?**
	ch3	**:SCALe3:CT?**
Response	<CT ratio (NR2)>	

<CT ratio (NR2)> = 0.001 to 1000

Description

Command: Sets the CT ratio.
Although NRf numerical values are accepted, values to the right of four decimal places are rounded off.

Query: Returns the CT ratio setting in NR2 format.

Example

Command: **:SCAL1:CT 2.1**

Query: **:SCAL1:CT?**

Response: (When HEADER ON) **:SCALE1:CT 2.100**
(When HEADER OFF) **2.100**

Note

- The same setting is applied to all channels which are a part of a wiring type.
- If the number of times to perform averaging is set to any value other than 1 and the range is changed, averaging is restarted and the maximum and minimum values are reset.
- You cannot change this setting during integration, while the display is held, or when the maximum/minimum values are being held.

(8) D/A output

Set and Query D/A Output (D/A1) Settings

Syntax

Command: Output Terminal D/A1 **:AOUT <Output item>**

Query: Output Terminal D/A1 **:AOUT?**

Response: <Output item>
See **List of Measurement Item Specifications** for details about the <Output item> field.

Description

Command: D/A1 Output Item

Query: Returns the D/A1 output item. (Same as **:AOUT:ITEM:DA1**.)

Example

Command: **:AOUT S1**

Query: **:AOUT?**

Response: (When HEADER ON) **:AOUT:ITEM:DA1 S1**
(When HEADER OFF) **S1**

Note

You can use the AOUT:ITEM(?) command to query and set DA1 through DA3.
・A device error will occur on units that do not have a D/A output.

Toggle and Query Analog/Waveform Output

Syntax

Command: **:AOUT:MONitor <STD/FAST>**

Query: **:AOUT:MONitor?**

Response: <STD/FAST>
STD: Standard output (analog output)
FAST: High-speed output (waveform output)

Description

Sets or queries the output of the D/A output terminals (U1 to U3, I1 to I3, P1 to P3, and Psum).

Example

Command: **:AOUT:MON STD**

Query: **:AOUT:MON?**

Response: (When HEADER ON) **:AOUT:MONITOR STD**
(When HEADER OFF) **STD**

Note

The output toggle is the same for all D/A output terminals (U1 to U3, I1 to I3, P1 to P3, and Psum). This command toggles the output for all output terminals.
・A device error will occur on units that do not have a D/A output.

Set and Query the D/A Output Terminal (U1 to U3, I1 to I3, P1 to P3, and Psum) Output Items

Syntax

Command	Output Terminal U1	**:AOUT:ITEM:U1**	**<RMS/DC/AC/FND/UMN>**
	Output Terminal U2	**:AOUT:ITEM:U2**	**<RMS/DC/AC/FND/UMN>**
	Output Terminal U3	**:AOUT:ITEM:U3**	**<RMS/DC/AC/FND/UMN>**
	Output Terminal I1	**:AOUT:ITEM:I1**	**<RMS/DC/AC/FND/UMN>**
	Output Terminal I2	**:AOUT:ITEM:I2**	**<RMS/DC/AC/FND/UMN>**
	Output Terminal I3	**:AOUT:ITEM:I3**	**<RMS/DC/AC/FND/UMN>**
	Output Terminal P1	**:AOUT:ITEM:P1**	**<RMS/DC/AC/FND/UMN>**
	Output Terminal P2	**:AOUT:ITEM:P2**	**<RMS/DC/AC/FND/UMN>**
	Output Terminal P3	**:AOUT:ITEM:P3**	**<RMS/DC/AC/FND/UMN>**
	Output Terminal Psum	**:AOUT:ITEM:P0**	**<RMS/DC/AC/FND/UMN>**
Query	Output Terminal U1	**:AOUT:ITEM:U1?**	
	Output Terminal U2	**:AOUT:ITEM:U2?**	
	Output Terminal U3	**:AOUT:ITEM:U3?**	
	Output Terminal I1	**:AOUT:ITEM:I1?**	
	Output Terminal I2	**:AOUT:ITEM:I2?**	
	Output Terminal I3	**:AOUT:ITEM:I3?**	
	Output Terminal P1	**:AOUT:ITEM:P1?**	
	Output Terminal P2	**:AOUT:ITEM:P2?**	
	Output Terminal P3	**:AOUT:ITEM:P3?**	
	Output Terminal Psum	**:AOUT:ITEM:P0?**	

Response <RMS/DC/AC/FND/UMN>
Returns the rectification method set for each terminal.

Description
Sets or queries the output (rectification method) of the D/A output terminals (U1 to U3, I1 to I3, and Psum).

Example

Command		**:AOUT:ITEM:U1 RMS**
Query		**:AOUT:ITEM:U1?**
Response	(When HEADER ON)	**:AOUT:ITEM:U1 RMS**
	(When HEADER OFF)	**RMS**

Note
When waveform output has been specified via the :AOUT:MONitor command, there will be no change to the output from this command.
If analog output has been specified, the output operation specified via this command will be performed.
・A device error will occur on units that do not have a D/A output.

Set and Query the D/A Output Terminal (D/A1 to D/A3) Output Items

Syntax

Command	Output Terminal D/A1	**:AOUT:ITEM:DA1**	**<D/A output item>**
	Output Terminal D/A2	**:AOUT:ITEM:DA2**	**<D/A output item>**
	Output Terminal D/A3	**:AOUT:ITEM:DA3**	**<D/A output item>**
Query	Output Terminal D/A1	**:AOUT:ITEM:DA1?**	
	Output Terminal D/A2	**:AOUT:ITEM:DA2?**	
	Output Terminal D/A3	**:AOUT:ITEM:DA3?**	

Response <D/A output item>
See the **Measurement Item Specification List** for details.

Description
Sets or queries the output (rectification method) of the D/A output terminals (U1 to U3, I1 to I3, and Psum).

Example

Command		**:AOUT:ITEM:DA1 WP1**
Query		**:AOUT:ITEM:DA1?**
Response	(When HEADER ON)	**:AOUT:ITEM:DA1 WP1**
	(When HEADER OFF)	**WP1**

Note・A device error will occur on units that do not have a D/A output.

(9) Instrument Display Settings

Set and Query Instrument Display Items (Normal Measurement Items)

Syntax

Command

Display Area: a to d	**:DISPlay[:NORMal]**	**<Display a>,<Display b>, <Display c>,<Display d>**
Display Area: a	**:DISPlay:NORMal:A**	**<Display a>**
Display Area: b	**:DISPlay:NORMal:B**	**<Display b>**
Display Area: c	**:DISPlay:NORMal:C**	**<Display c>**
Display Area: d	**:DISPlay:NORMal:D**	**<Display d>**

Query

Display Area: a to d	**:DISPlay[:NORMal]?**
Display Area: a	**:DISPlay:NORMal:A?**
Display Area: b	**:DISPlay:NORMal:B?**
Display Area: c	**:DISPlay:NORMal:C?**
Display Area: d	**:DISPlay:NORMal:D?**

Response

<Display a>,<Display b>,<Display c>,<Display d>

See **List of Measurement Item Specifications** for details about the <Display items a to d> fields.

Description

Command

Sets or queries the items to display in the instrument display areas "a" to "d".

Example

Command

:DISP U1,I1,P1,TIME

The instrument display area settings are as follows:

Display Area "a": Voltage (ch1 acdc)
Display Area "b": Current (ch1 acdc)
Display Area "c": Active power (ch1 acdc)
Display Area "d": Integration time

Query

:DISP?

Response

(When HEADER ON) **:DISPLAY U1,I1,P1,TIME**
(When HEADER OFF) **U1,I1,P1,TIME**

Note

・The value displayed (instantaneous value, maximum value, or minimum value) depends on the HOLD state.
The HOLD states and the subsequent output values are as follows:

HOLD State	Displayed Content
OFF	Instantaneous value
ON	HOLD value
Maximum value hold	Maximum value
Minimum value hold	Minimum value

・If this command is issued while in harmonic wave display mode, use the :DISPlay:MODE command to change to normal display mode.
・The above-mentioned “instantaneous value” corresponds to the averaged value while the value is being averaged.

Normal Measurement Display Items List

(For :DISPlay[:NORMal], AOUT:ITEM:DA1, etc.)

Description		Parameter List	:DISPlay :NORMal Compatibility	:AOUT :ITEM Compatibility
Output items	Rectification Method			
Voltage (U)	ACDC	U1/U2/U3/U0 (V1/V2/V3/V0 can also be used.)	○	○
	ACDC UMEAN	UMN1/UMN2/UMN3/UMN0	○	○
	DC	UDC1/UDC2/UDC3/UDC0	○	○
	AC	UAC1/UAC2/UAC3/UAC0	○	○
	FND	UFND1/UFND2/UFND3/UFND0	○	○
Current (I)	ACDC	I1/I2/I3/I0 (A1/A2/A3/A0 can also be used.)	○	○
	DC	IDC1/IDC2/IDC3/IDC0	○	○
	AC	IAC1/IAC2/IAC3/IAC0	○	○
	FND	IFND1/IFND2/IFND3/IFND0	○	○
Active power (P)	ACDC	P1/P2/P3/P0 (W1/W2/W3/W0 can also be used.)	○	○
	DC	PDC1/PDC2/PDC3/PDC0	○	○
	AC	PAC1/PAC2/PAC3/PAC0	○	○
	FND	PFND1/PFND2/PFND3/PFND0	○	○
Apparent power (S)	ACDC	S1/S2/S3/S0 (VA1/VA2/VA3/VA0 can also be used.)	○	○
	ACDC UMEAN	SMN1/SMN2/SMN3/SMN0	○	○
	AC	SAC1/SAC2/SAC3/SAC0	○	○
	FND	SFND1/SFND2/SFND3/SFND0	○	○
Inactive power (Q)	ACDC	Q1/Q2/Q3/Q0 (VAR1/VAR2/VAR3/VAR0 can also be used.)	○	○
	ACDC UMEAN	QMN1/QMN2/QMN3/QMN0	○	○
	AC	QAC1/QAC2/QAC3/QAC0	○	○
	FND	QFND1/QFND2/QFND3/QFND0	○	○
Power factor (λ)	ACDC	PF1/PF2/PF3/PF0	○	○
	ACDC UMEAN	PFMN1/PFMN2/PFMN3/PFMN0	○	○
	AC	PFAC1/PFAC2/PFAC3/PFAC0	○	○
	FND	PFFND1/PFFND2/PFFND3/PFFND0	○	○
Phase angle (φ)	AC	DEGAC1/DEGAC2/DEGAC3/DEGAC0	○	○
	FND	DEGFND1/DEGFND2/DEGFND3 DEGFND0	○	○
Voltage frequency (f)	-	FREQU1/FREQU2/FREQU3	○	○
Current frequency (f)	-	FREQI1/FREQI2/FREQI3	○	○
Positive current integration	DC	PIHDC1/PIHDC2/PIHDC3	○	○
Negative current integration	DC	MIHDC1/MIHDC2/MIHDC3	○	○
Current integration (total sum)	ACDC	IH1/IH2/IH3 (AH1/AH2/AH3 can also be used.)	○	○
	ACDC UMEAN	IHMN1/IHMN2/IHMN3	○	○
	DC	IHDC1/IHDC2/IHDC3	○	○
Positive Active power integration	ACDC	PWP1/PWP2/PWP3/PWP0 (PWH1/PWH2/PWH3/PWH0 can also be used. PINTEG can be used as PWP0.)	○	○
	ACDC UMEAN	PWPMN1/PWPMN2/PWPMN3/PWPMN0	○	○
	DC	PWPDC1/PWPDC2/PWPDC3	○	○

Description		Parameter List	:DISPlay :NORMal Compatibility	:AOUT :ITEM Compatibility
Output items	Rectification Method			
Negative active power integration	ACDC	MWP1/MWP2/MWP3/MWP0 (MWH1/MWH2/MWH3/MWH0 can also be used. MINTEG can be used as MWP0.)	○	○
	ACDC UMEAN	MWPMN1/MWPMN2/MWPMN3/MWPMN0	○	○
	DC	MWPDC1/MWPDC2/MWPDC3	○	○
Active power (total sum of integration)	ACDC	WP1/WP2/WP3/WP0 (WH1/WH2/WH3/WH0 can also be used. INTEG can be used as WP0.)	○	○
	ACDC UMEAN	WPMN1/WPMN2/WPMN3/WPMN0	○	○
	DC	WPDC1/WPDC2/WPDC3	○	○
Sets/Queries the integration	-	TIME	○	-
Voltage waveform peak value (Upk)	-	UPK1/UPK2/UPK3	○	-
Current waveform peak value (Ipk)		IPK1/IPK2/IPK3	○	-
Efficiency factor (η)	-	EFF1/EFF2	○	○
Voltage crest factor (Ucf)	-	UCF1/UCF2/UCF3	○	○
Current crest factor (Icf)	-	ICF1/ICF2/ICF3	○	○
Time average current (T.AV I)	ACDC	ITAV1/ITAV2/ITAV3	○	○
	ACDC UMEAN	ITAVMN1/ITAVMN2/ITAVMN3	○	○
	DC	ITAVDC1/ITAVDC2/ITAVDC3	○	○
Time average power (T.AV P)	ACDC	PTAV1/PTAV2/PTAV3/PTAV0	○	○
	ACDC UMEAN	PTAVMN1/PTAVMN2/PTAVMN3/PTAVMN0	○	○
	DC	PTAVDC1/PTAVDC2/PTAVDC3	○	○
Voltage ripple factor (Urf)	-	URF1/ URF2/ URF3	○	○
Current ripple factor (Irf)	-	IRF1/ IRF2/ IRF3	○	○
Voltage total distortion factor (Uthd)	-	UTHD1/ UTHD2/ UTHD3	○	○
Current total distortion factor (Ithd)	-	ITHD1/ ITHD2/ ITHD3	○	○
Inter-channel voltage fundamental wave phase difference (θU)	FND	UCHDEG2_1/UCHDEG3_1	○	○
Inter-channel current fundamental wave phase difference (θI)	FND	ICHDEG2_1/ICHDEG3_1	○	○

Note: Calculation items that do not have a measurement value but could still be displayed on the unit (URF0, etc.) are not included in the table.

Toggle and Query the Normal Measurement and Harmonic Wave Measurement Display Modes

Syntax

Command **:DISPlay:MODE <NORM/HRMS/HCON /HOSRMS/HOSCON>**

Query **:DISPlay:MODE?**

Response <NORM/HRMS/HCON/HOSRMS/HOSCON>
NORM: Normal measurement values
HRMS: Harmonic wave level display, all orders
(a: order, b/c/d: harmonic wave measurement)
HCON: Harmonic wave content display, all orders
(a: order, b/c/d: harmonic wave measurement)
HOSRMS: Harmonic wave level display, individual orders
(a/b/c/d: harmonic wave measurement)
HOSCON: Harmonic wave content display, individual orders
(a/b/c/d: harmonic wave measurement)

Description

Toggles or queries the content of the display area (normal measurement or harmonic wave measurement).

Example

Command **:DISP:MODE NORM**

Query **:DISP:MODE?**

Response (When HEADER ON) **:DISPLAY:MODE NORM**
(When HEADER OFF) **NORM**

Set and Query the Displayed Order for Harmonic Wave Common Order Display Mode

Syntax

Command **:DISPlay:HARMonic:ORDer <0 to 50 (NR1)>**

Query **:DISPlay:HARMonic:ORDer?**

Response <0 to 50 (NR1)>

Description

Sets or queries the order for harmonic wave common order display mode. Although NRf numerical values are accepted, values to the right of the decimal are dropped.

Example

Command **:DISP:HARM:ORD 21**

Query **:DISP:HARM:ORD?**

Response (When HEADER ON) **:DISPLAY:HARMONIC:ORDER 21**
(When HEADER OFF) **21**

Note

・If the display is in any other mode other than harmonic wave (all orders) display mode, the display will not be immediately affected by this command.
The setting will be applied when the display mode is changed via a command such as :DISPlay:MODE.

Set and Query the Display Items for Harmonic Wave Common Order Display Mode

Syntax

Command
Display Area: b **:DISPlay:HARMonic:B:ITEM <Harmonic wave display item>**
Display Area: c **:DISPlay:HARMonic:C:ITEM <Harmonic wave display item>**
Display Area: d **:DISPlay:HARMonic:D:ITEM <Harmonic wave display item>**

Query
Display Area: b **:DISPlay:HARMonic:B:ITEM?**
Display Area: c **:DISPlay:HARMonic:C:ITEM?**
Display Area: d **:DISPlay:HARMonic:D:ITEM?**

Response <Harmonic wave display item>

Harmonic wave voltage	HU1/HU2/HU3/HU0
Harmonic wave current	HI1/HI2/HI3/HI0
the harmonic wave active power output	HP1/HP2/HP3/HP0

Description

Sets or queries the display items for harmonic wave common order display mode.

Example

Command **:DISP:HARM:B:ITEM HU1**

Query **:DISP:HARM:B:ITEM?**

Response (When HEADER ON) **:DISPLAY:HARMONIC:B:ITEM HU1**
(When HEADER OFF) **HU1**

Note

・If the display is in any other mode other than harmonic wave (all orders) display mode, the display will not be immediately affected by this command.
Change the display mode via a command such as :DISPlay:MODE.

Set and Query the Displayed Order for Harmonic Wave Individual Order Display Mode

Syntax

Command

Display Area: a **:DISPlay:HORDerSel:A:ORDer** <0 to 50 (NR1)>
Display Area: b **:DISPlay:HORDerSel:B:ORDer** <0 to 50 (NR1)>
Display Area: c **:DISPlay:HORDerSel:C:ORDer** <0 to 50 (NR1)>
Display Area: d **:DISPlay:HORDerSel:D:ORDer** <0 to 50 (NR1)>

Query

Display Area: a **:DISPlay:HORDerSel:A:ORDer?**
Display Area: b **:DISPlay:HORDerSel:B:ORDer?**
Display Area: c **:DISPlay:HORDerSel:C:ORDer?**
Display Area: d **:DISPlay:HORDerSel:D:ORDer?**

Response

<0 to 50 (NR1)>

Description

Sets or queries the displayed order for harmonic wave individual order display mode.

Example

Command **:DISP:HORDS:A:ORD 39**
Query **:DISP:HORDS:A:ORD?**
Response (When HEADER ON) **:DISPLAY:HORDERSEL:A:ORDER 39**
(When HEADER OFF) **39**

Note

・If the display is in any other mode other than harmonic wave (individual order) display mode, the display will not be immediately affected by this command.
Change the display mode via a command such as :DISPlay:MODE.

Set and Query the Display Items for Harmonic Wave Individual Order Display Mode

Syntax

Command

Display Area: a **:DISPlay:HORDerSel:A:ITEM** <Harmonic wave display item>
Display Area: b **:DISPlay:HORDerSel:B:ITEM** <Harmonic wave display item>
Display Area: c **:DISPlay:HORDerSel:C:ITEM** <Harmonic wave display item>
Display Area: d **:DISPlay:HORDerSel:D:ITEM** <Harmonic wave display item>

Query

Display Area: a **:DISPlay:HORDerSel:A:ITEM?**
Display Area: b **:DISPlay:HORDerSel:B:ITEM?**
Display Area: c **:DISPlay:HORDerSel:C:ITEM?**
Display Area: d **:DISPlay:HORDerSel:D:ITEM?**

Response

<Harmonic wave display item>
See the :DISPlay:HARMonic:B:ITEM section for details.

Description

Sets or queries the display items for harmonic wave individual order display mode.

Example

Command **:DISP:HORDS:A:ITEM HI1**
Query **:DISP:HORDS:A:ITEM?**
Response (When HEADER ON) **:DISPLAY:HORDERSEL:A:ITEM HI1**
(When HEADER OFF) **HI1**

Note

・If the display is in any other mode other than harmonic wave (individual order) display mode, the display will not be immediately affected by this command.
Change the display mode via a command such as :DISPlay:MODE.

(10) Measurement Value Output

Query Measurement Data (Normal Measurement Items)

Syntax Query

:MEASure[:POWer]? (<Output item 1>...)
:MEASure[:NORMal]:VALue? (<Output item 1>...)

Up to a maximum of 180 items

Response

<Output item 1><Measurement value 1>,<Output item 2><Measurement value 2>….

See the **List of Output Item Specifications** for details about the <Measurement item> field.

Output Format

Header Portion	Data Formats
Measurement Values U,I,P,S,Q,PF, DEG, FREQU,FREQI, UPK,IPK, EFF,UCF,ICF, ITAV,PTAV, URF,IRF, UTHD,ITHD, UCHD,ICHD	NR3 numerical value data (always 10 characters) ±ddddddE±e (dddddd: 6-character numerical value data, including decimal point, e: coefficient 0, 3, or 6)
Integration Values IH,PIH,MIH, WP,PWP,MWP	NR3 numerical value data (always 11 characters) ±ddddddddE±e (ddddddd: 7-character numerical value data, including decimal point, e: coefficient 0, 3, or 6)
Time Values TIME	NR1 numerical value data (always 11 characters) hhhhh,mm,ss (hours, minutes, seconds)

Error Data

Headers / Error	Measurement Values U,I,P,S,Q,PF,DEG, FREQU,FREQI, UPK,IPK, EFF,UCF,ICF, ITAV,PTAV,URF,IRF, UTHD,ITHD, UCHD,ICHD	Integration Values IH,PIH,MIH, WP,PWP,MWP
Over range (Instrument display: "o.r")	±999.99E+9	None
Scaling error (Instrument display: "S.Err")	±888.88E+9	±8888.88E+9
No data	±777.77E+9	±7777.77E+9

Description Query

Returns the measurement value as a numerical value.
The output items can be specified directly as parameters to :MEASure?, or specified in advance via a :MEASure:ITEM command.
If only :MEASure[:POWer]? is specified without an output item, the outputs specified in advance via a :MEASure:ITEM? command are output.
If specified directly, the items are output in the order they were specified.
You can specify the output items listed in the **List of Directly Specified :MEASure Query Items** below.
If you specified the output items in advance via :MEASure:ITEM? commands, the items will be output in the order that they appear in the **List of Directly Specified :MEASure Query Items**.

Example Query

:MEAS? U1,I1,P1

Response Outputs the voltage, current, and active power values for ch1.
(When HEADER ON) **U1 +150.00E+0;I1 +020.00E+0;P1 +03.000E+3**
(When HEADER OFF) **+150.00E+0;+020.00E+0;+03.000E+3**

Note

・When all output items are set to OFF (immediately after executing :MEASure:ITEM:ALLClear), the measurement values for the items shown in display areas (a) through (d) will be output.
・You can use the :TRANsmit:SEParator command to change the message unit separator from a semicolon ";" to a comma ",".
・If the display is blank (such as when the range has been changed), the response message will be "no data" (±777.77E+9) until the measurement data is displayed.
We recommend only using this function with a fixed range.
・The output of :MEASure? is not affected by the HOLD status.
・If :MEASure[:POWer]? is called with no specified output items immediately after powering on the instrument, U, I, P, S, Q, PF, DEG, FREQU, and FREQI will be output for channels 1 through 3 and SUM.
・The output items specified via :MEASure:ITEM commands will not be reset even if a system reset is performed. These items are reset only when the instrument is powered on.

List of Directly Specified :MEASure? Query Items

Measurement Item	Rectification Method	Type	Parameter List			
			ch1	ch2	ch3	SUM
Status		Instantaneous value	STATUS (Details P.67)			
		Total	STATUS_MAXMIN			
Voltage	AC+DC	Instantaneous value	U1 (V1 is also valid.)	U2 (U2 is also valid.)	U3 (V3 is also valid.)	U0 (V0 is also valid.)
		Maximum value	U1_MAX	U2_MAX	U3_MAX	U0_MAX
		Minimum value	U1_MIN	U2_MIN	U3_MIN	U0_MIN
	AC+DC UMEAN	Instantaneous value	UMN1	UMN2	UMN3	UMN0
		Maximum value	UMN1_MAX	UMN2_MAX	UMN3_MAX	UMN0_MAX
		Minimum value	UMN1_MIN	UMN2_MIN	UMN3_MIN	UMN0_MIN
	AC	Instantaneous value	UAC1	UAC2	UAC3	UAC0
		Maximum value	UAC1_MAX	UAC2_MAX	UAC3_MAX	UAC0_MAX
		Minimum value	UAC1_MIN	UAC2_MIN	UAC3_MIN	UAC0_MIN
	DC	Instantaneous value	UDC1	UDC2	UDC3	UDC0
		Maximum value	UDC1_MAX	UDC2 _MAX	UDC3_MAX	UDC0_MAX
		Minimum value	UDC1_MIN	UDC2 _MIN	UDC3_MIN	UDC0_MIN
	FND	Instantaneous value	UFND1	UFND2	UFND3	UFND0
		Maximum value	UFND1_MAX	UFND2_MAX	UFND3_MAX	UFND0_MAX
		Minimum value	UFND1_MIN	UFND2_MIN	UFND3_MIN	UFND0_MIN
Current	AC+DC	Instantaneous value	I1 (A1 is also valid.)	I2 (A2 is also valid.)	I3 (A3 is also valid.)	I0 (A0 is also valid.)
		Maximum value	I1_MAX	I2_MAX	I3_MAX	I0_MAX
		Minimum value	I1_MIN	I2_MIN	I3_MIN	I0_MIN
	MEAN	Instantaneous value	IMN1	IMN2	IMN3	IMN0
		Maximum value	IMN1_MAX	IMN2_MAX	IMN3_MAX	IMN0_MAX
		Minimum value	IMN1_MIN	IMN2_MIN	IMN3_MIN	IMN0_MIN
	AC	Instantaneous value	IAC1	IAC2	IAC3	IAC0
		Maximum value	IAC1_MAX	IAC2_MAX	IAC3_MAX	IAC0_MAX
		Minimum value	IAC1_MIN	IAC2_MIN	IAC3_MIN	IAC0 _MIN
	DC	Instantaneous value	IDC1	IDC2	IDC3	IDC0
		Maximum value	IDC1_MAX	IDC2_MAX	IDC3_MAX	IDC0_MAX
		Minimum value	IDC1_MIN	IDC2_MIN	IDC3_MIN	IDC0_MIN
	FND	Instantaneous value	IFND1	IFND2	IFND3	IFND0
		Maximum value	IFND1_MAX	IFND2_MAX	IFND3_MAX	IFND0_MAX
		Minimum value	IFND1_MIN	IFND2_MIN	IFND3_MIN	IFND0_MIN
Active power	AC+DC	Instantaneous value	P1 (W1 is also valid.)	P2 (W2 is also valid.)	P3 (W3 is also valid.)	P0 (W0 is also valid.)
		Maximum value	P1_MAX	P2_MAX	P3_MAX	P0_MAX
		Minimum value	P1_MIN	P2_MIN	P3_MIN	P0_MIN

Measurement Item	Rectification Method	Type	Parameter List			
			ch1	ch2	ch3	SUM
	MEAN	Instantaneous value	PMN1	PMN2	PMN3	PMN0
		Maximum value	PMN1_MAX	PMN2_MAX	PMN3_MAX	PMN0_MAX
		Minimum value	PMN1_MIN	PMN2_MIN	PMN3_MIN	PMN0_MIN
	AC	Instantaneous value	PAC1	PAC2	PAC3	PAC0
		Maximum value	PAC1_MAX	PAC2_MAX	PAC3_MAX	PAC0_MAX
		Minimum value	PAC1_MIN	PAC2_MIN	PAC3_MIN	PAC0_MIN
	DC	Instantaneous value	PDC1	PDC2	PDC3	PDC0
		Maximum value	PDC1_MAX	PDC2_MAX	PDC3_MAX	PDC0_MAX
		Minimum value	PDC1_MIN	PDC2_MIN	PDC3_MIN	PDC0_MIN
	FND	Instantaneous value	PFND1	PFND2	PFND3	PFND0
		Maximum value	PFND1_MAX	PFND2_MAX	PFND3_MAX	PFND0_MAX
		Minimum value	PFND1_MIN	PFND2_MIN	PFND3_MIN	PFND0_MIN
Apparent power	AC+DC	Instantaneous value	S1 (VA1 is also valid.)	S2 (VA2 is also valid.)	S3 (VA3 is also valid.)	S0 (VA0 is also valid.)
		Maximum value	S1_MAX	S2_MAX	S3_MAX	S0_MAX
		Minimum value	S1_MIN	S2_MIN	S3_MIN	S0_MIN
	AC+DC UMEAN	Instantaneous value	SMN1	SMN2	SMN3	SMN0
		Maximum value	SMN1_MAX	SMN2_MAX	SMN3_MAX	SMN0_MAX
		Minimum value	SMN1_MIN	SMN2_MIN	SMN3_MIN	SMN0_MIN
	AC	Instantaneous value	SAC1	SAC2	SAC3	SAC0
		Maximum value	SAC1_MAX	SAC2_MAX	SAC3_MAX	SAC0_MAX
		Minimum value	SAC1_MIN	SAC2_MIN	SAC3_MIN	SAC0_MIN
	FND	Instantaneous value	SFND1	SFND2	SFND3	SFND0
		Maximum value	SFND1_MAX	SFND2_MAX	SFND3_MAX	SFND0_MAX
		Minimum value	SFND1_MIN	SFND2_MIN	SFND3_MIN	SFND0_MIN
Reactive power	AC+DC	Instantaneous value	Q1 (VAR1 is also valid.)	Q2 (VAR2 is also valid.)	Q3 (VAR3 is also valid.)	Q0 (VAR0 is also valid.)
		Maximum value	Q1_MAX	Q2_MAX	Q3_MAX	Q0_MAX
		Minimum value	Q1_MIN	Q2_MIN	Q3_MIN	Q0_MIN
	AC+DC UMEAN	Instantaneous value	QMN1	QMN2	QMN3	QMN0
		Maximum value	QMN1_MAX	QMN2_MAX	QMN3_MAX	QMN0_MAX
		Minimum value	QMN1_MIN	QMN2_MIN	QMN3_MIN	QMN0_MIN
	AC	Instantaneous value	QAC1	QAC2	QAC3	QAC0
		Maximum value	QAC1_MAX	QAC2_MAX	QAC3_MAX	QAC0_MAX
		Minimum value	QAC1_MIN	QAC2_MIN	QAC3_MIN	QAC0_MIN
	FND	Instantaneous value	QFND1	QFND2	QFND3	QFND0
		Maximum value	QFND1_MAX	QFND2_MAX	QFND3_MAX	QFND0_MAX
		Minimum value	QFND1_MIN	QFND2_MIN	QFND3_MIN	QFND0_MIN
Power factor	AC+DC	Instantaneous value	PF1	PF2	PF3	PF0
		Maximum value	PF1_MAX	PF2_MAX	PF3_MAX	PF0_MAX
		Minimum value	PF1_MIN	PF2_MIN	PF3_MIN	PF0_MIN
	AC+DC UMEAN	Instantaneous value	PFMN1	PFMN2	PFMN3	PFMN0
		Maximum value	PFMN1_MAX	PFMN2_MAX	PFMN3_MAX	PFMN0_MAX
		Minimum value	PFMN1_MIN	PFMN2_MIN	PFMN3_MIN	PFMN0_MIN
	AC	Instantaneous value	PFAC1	PFAC2	PFAC3	PFAC0
		Maximum value	PFAC1_MAX	PFAC2_MAX	PFAC3_MAX	PFAC0_MAX
		Minimum value	PFAC1_MIN	PFAC2_MIN	PFAC3_MIN	PFAC0_MIN
	FND	Instantaneous value	PFFND1	PFFND2	PFFND3	PFFND0
		Maximum value	PFFND1_MAX	PFFND2_MAX	PFFND3_MAX	PFFND0_MAX
		Minimum value	PFFND1_MIN	PFFND2_MIN	PFFND3_MIN	PFFND0_MIN
Phase angle	AC	Instantaneous value	DEGAC1	DEGAC2	DEGAC3	DEGAC0
		Maximum value	DEGAC1_MAX	DEGAC2_MAX	DEGAC3_MAX	DEGAC0_MAX
		Minimum value	DEGAC1_MIN	DEGAC2_MIN	DEGAC3_MIN	DEGAC0_MIN
	FND	Instantaneous value	DEGFND1	DEGFND2	DEGFND3	DEGFND0
		Maximum value	DEGFND1_MAX	DEGFND2_MAX	DEGFND3_MAX	DEGFND0_MAX
		Minimum value	DEGFND1_MIN	DEGFND2_MIN	DEGFND3_MIN	DEGFND0_MIN

Measurement Item	Rectification Method	Type	Parameter List			
			ch1	ch2	ch3	SUM
Voltage frequency	-	Instantaneous value	FREQU1 (FREQ1 is also valid.)	FREQU2 (FREQ2 is also valid.)	FREQU3 (FREQ3 is also valid.)	
		Maximum value	FREQU1_MAX	FREQU2_MAX	FREQU3_MAX	
		Minimum value	FREQU1_MIN	FREQU2_MIN	FREQU3_MIN	
Current frequency	-	Instantaneous value	FREQI1	FREQI2	FREQI3	
		Maximum value	FREQI1_MAX	FREQI2_MAX	FREQI3_MAX	
		Minimum value	FREQI1_MIN	FREQI2_MIN	FREQI3_MIN	
Voltage waveform peak value	-	Instantaneous value	UPK1	UPK2	UPK3	
		Maximum value	UPK1_MAX	UPK2_MAX	UPK3_MAX	
		Minimum value	UPK1_MIN	UPK2_MIN	UPK3_MIN	
Current waveform peak value	-	Instantaneous value	IPK1 (IP is also valid)	IPK2	IPK3	
		Maximum value	IPK1_MAX	IPK2_MAX	IPK3_MAX	
		Minimum value	IPK1_MIN	IPK2_MIN	IPK3_MIN	
Efficiency factor1	-	Instantaneous value	EFF1			
		Maximum value	EFF1_MAX			
		Minimum value	EFF1_MIN			
Efficiency factor2	-	Instantaneous value		EFF2		
		Maximum value		EFF2_MAX		
		Minimum value		EFF2_MIN		
Voltage crest factor	-	Instantaneous value	UCF1	UCF2	UCF3	
		Maximum value	UCF1_MAX	UCF2_MAX	UCF3_MAX	
		Minimum value	UCF1_MIN	UCF2_MIN	UCF3_MIN	
Current crest factor	-	Instantaneous value	ICF1	ICF2	ICF3	
		Maximum value	ICF1_MAX	ICF2_MAX	ICF3_MAX	
		Minimum value	ICF1_MIN	ICF2_MIN	ICF3_MIN	
Time average current	AC+DC	Instantaneous value	ITAV1	ITAV2	ITAV3	
	AC+DC UMEAN	Instantaneous value	ITAVMN1	ITAVMN2	ITAVMN3	
	DC	Instantaneous value	ITAVDC1	ITAVDC2	ITAVDC3	
Time average active power	AC+DC	Instantaneous value	PTAV1	PTAV2	PTAV3	PTAV0
	AC+DC UMEAN	Instantaneous value	PTAVMN1	PTAVMN2	PTAVMN3	PTAVMN0
	DC	Instantaneous value	PTAVDC1	PTAVDC2	PTAVDC3	
Voltage ripple factor	-	Instantaneous value	URF1	URF2	URF3	
		Maximum value	URF1_MAX	URF2_MAX	URF3_MAX	
		Minimum value	URF1_MIN	URF2_MIN	URF3_MIN	
Current ripple factor	-	Instantaneous value	IRF1	IRF2	IRF3	
		Maximum value	IRF1_MAX	IRF2_MAX	IRF3_MAX	
		Minimum value	IRF1_MIN	IRF2_MIN	IRF3_MIN	
Total harmonic wave voltage distortion factor	-	Instantaneous value	UTHD1	UTHD2	UTHD3	
		Maximum value	UTHD1_MAX	UTHD2_MAX	UTHD3_MAX	
		Minimum value	UTHD1_MIN	UTHD2_MIN	UTHD3_MIN	
Total harmonic wave current distortion factor	-	Instantaneous value	ITHD1	ITHD2	ITHD3	
		Maximum value	ITHD1_MAX	ITHD2_MAX	ITHD3_MAX	
		Minimum value	ITHD1_MIN	ITHD2_MIN	ITHD3_MIN	
Inter-channel voltage fundamental wave phase difference	FND	Instantaneous value		UCHDEG2_1	UCHDEG3_1	
		Maximum value		UCHDEG2_1_MAX	UCHDEG3_1_MAX	
		Minimum value		UCHDEG2_1_MIN	UCHDEG3_1_MIN	
Inter-channel current fundamental wave phase	FND	Instantaneous value		ICHDEG2_1	ICHDEG3_1	
		Maximum value		ICHDEG2_1_MAX	ICHDEG3_1_MAX	

Measurement Item	Rectification Method	Type	Parameter List			
			ch1	ch2	ch3	SUM
difference		Minimum value		ICHDEG2_1_MIN	ICHDEG3_1_MIN	
Positive power integration	AC+DC	Instantaneous value	PWP1 (PWH1 is also valid.)	PWP2 (PWH2 is also valid.)	PWP3 (PWH3 is also valid.)	PWP0 (PWH0 or PINTEG is also valid.)
Negative power integration	AC+DC	Instantaneous value	MWP1 (MWH1 is also valid.)	MWP2 (MWH2 is also valid.)	MWP3 (MWH3 is also valid.)	MWP0 (MWH0 or MINTEG is also valid.)
Active power integration (total sum)	AC+DC	Instantaneous value	WP1 (WH1 is also valid.)	WP2 (WH2 is also valid.)	WP3 (WH3 is also valid.)	WP0 (WH0 or INTEG is also valid.)
Positive power integration	AC+DC UMEAN	Instantaneous value	PWPMN1	PWPMN2	PWPMN3	PWPMN0
Negative power integration	AC+DC UMEAN	Instantaneous value	MWPMN1	MWPMN2	MWPMN3	MWPMN0
Active power integration (total sum)	AC+DC UMEAN	Instantaneous value	WPMN1	WPMN2	WPMN3	WPMN0
Positive power integration	DC	Instantaneous value	PWPDC1	PWPDC2	PWPDC3	
Negative power integration	DC	Instantaneous value	MWPDC1	MWPDC2	MWPDC3	
Active power integration (total sum)	DC	Instantaneous value	WPDC1	WPDC2	WPDC3	
Current integration (total sum)	AC+DC	Instantaneous value	IH1 (AH1 is also valid.)	IH2 (AH2 is also valid.)	IH3 (AH3 is also valid.)	
	AC+DC UMEAN	Instantaneous value	IHMN1	IHMN2	IHMN3	
Positive current integration	DC	Instantaneous value	PIHDC1	PIHDC2	PIHDC3	
Negative current integration	DC	Instantaneous value	MIHDC1	MIHDC2	MIHDC3	
Current integration (total sum)	DC	Instantaneous value	IHDC1	IHDC2	IHDC3	
Integration time	-	Instantaneous value	TIME			

List of Directly Specified :MEASure? Query Items

Note: **U→, V, I→A, P→W, S→VA, Q→VAR, IH→AH, PWP→PWH, MWP→MWH, WH→WP,** and **WH→INTEG** are all valid substitutions.
For example, :MEAS? U1 and :MEAS? V1 produce the same response. However, U is always returned as the header.

Perform and Query a Reset of :MEASure? and :MEASure:HARMonics? Output Items

Syntax Command **:MEASure:ITEM:ALLClear**

Description Clears all outputs set for :MEASure? and :MEASure:HARMonic? via :MEASure:ITEM commands.

Example Command **:MEAS:ITEM:ALLC**

Note

- This command turns all output settings OFF.
- The output settings immediately after the instrument is powered on are as follows:
  Normal Measurement Items
  U, I, P, S, Q, PF, DEG, FREQU, and FREQI for channels 1 through 3 and SUM.
  Harmonic Wave
  First order effective values HU, HI, and HP for channels 1 through 3 and SUM.

Query:MEASure? Output Items

Syntax Query **:MEASure[:NORMal]:ITEM?**

Description Clears all outputs set for :MEASure? and :MEASure:HARMonic? Returns the output settings for when :MEASure? is executed without any direct specifications.

Example Query **:MEAS:ITEM?**

Response (When HEADER ON) **:MEASURE:NORMAL:ITEM U1,U2**

(When HEADER OFF) **U1,U2**

Note

- If all output items are turned OFF, this command returns the measurement items displayed on the instrument (in display areas (a) through (d)).

Set and Query:MEASure? Output Items

Syntax

Command **:DATAout:ITEM** <data1 (NR1)>,<data2 (NR1)>,<data3 (NR1)>,<data4 (NR1)>,<data5 (NR1)>,<data6 (NR1)>

Query **:DATAout:ITEM?**

Response <data1>,<data2>,<data3>,<data4>,<data5>,<data6>

	128	64	32	16	8	4	2	1
<data1 (NR1)>	bit7	bit6	bit5	bit4	bit3	bit2	bit1	bit0
	IPK1	DEG1	PF1	Q1	S1	P1	I1	U1
<data2 (NR1)>	bit7	bit6	bit5	bit4	bit3	bit2	bit1	bit0
	IPK2	DEG2	PF2	Q2	S2	P2	I2	U2
<data3 (NR1)>	bit7	bit6	bit5	bit4	bit3	bit2	bit1	bit0
	IPK3	DEG3	PF3	Q3	S3	P3	I3	U3
<data4 (NR1)>	bit7	bit6	bit5	bit4	bit3	bit2	bit1	bit0
	FREQU1	DEG0	PF0	Q0	S0	P0	I0	U0
<data5 (NR1)>	bit7	bit6	bit5	bit4	bit3	bit2	bit1	bit0
		IH3	IH2	IH1	TIME	WP3	WP2	WP1
<data6 (NR1)>	bit7	bit6	bit5	bit4	bit3	bit2	bit1	bit0
		MWP3	MWP2	MWP1		PWP3	PWP2	PWP1

Description

Sets or queries the measurement items for the :MEASure? query as a numerical value between 0 and 255.
Although NRf numerical values are accepted, values to the right of the decimal are dropped.

Example

Command **:DATA:ITEM 7,0,0,0,0,0**
(This enables the output of the voltage, current, and active power on channel 1.)

Query **:DATA:ITEM?**

Response (When HEADER ON) **:DATAOUT:ITEM 7,0,0,0,0,0**
(When HEADER OFF) **7,0,0,0,0,0**

Note

・This command is provided for compatibility with control programs for the existing model 3331.
This command can be used only to set or query AC/DC rectification measurement values.
In order to fully utilize the capabilities of the PW3336 and PW3337, we recommend using the MEASure:ITEM commands.

Set and Query :MEASure? Output Items (Measurement status data: instantaneous value, maximum value, minimum value)

Syntax

Instantaneous value: **:MEASure[:NORMal]:ITEM:STATus:INST(?)** **<Output item>**

Maximum/Minimum value: **:MEASure[:NORMal]:ITEM:STATus:MAXmin(?)** **<Output item>**

Response

<Output item (NR1)>

128	64	32	16	8	4	2	1
bit7	bit6	bit5	bit4	bit3	bit2	bit1	bit0
							STATUS

Description

Sets the measurement data status (instantaneous value, maximum value, minimum value) output items as numerical values between 0 and 1.
Although NRf numerical values are accepted, values to the right of the decimal are dropped.
If no items are specified directly via a :MEASure? query, output is based on the specification of this command.
INST indicates the status for the instantaneous value at the time when the data is acquired.
MAXmin indicates the total from the time the maximum and minimum values were last reset.

The Status data indicates the status of the warning indicators on the instrument when the measurement data was saved. The Status data is represented by a 32-bit hexadecimal value. The content of each of these 32 bits is as follows:

bit31	bit30	bit29	bit28	bit27	bit26	bit25	bit24
-	HM3	HM2	HM1	-	-	-	-
bit23	bit22	bit21	bit20	bit19	bit18	bit17	bit16
-	-	-	-	-	SY3	SY2	SY1
bit15	bit14	bit13	bit12	bit11	bit10	bit9	bit8
-	-	-	-	-	-	-	-
bit7	bit6	bit5	bit4	bit3	bit2	bit1	bit0
-	PI3	PI2	PI1	-	PU3	PU2	PU1

HMx: Harmonic wave measurement synchronization error
SYx: Channel synchronization error
PIx: Channel current peak exceeded
PUx: Channel voltage peak exceeded

Example

Command: **:MEAS:ITEM:STAT:INST 1**

Specifies to turn ON measurement status output.

Query: **:MEAS:ITEM:STAT:INST?**

Response
(When HEADER ON) **:MEASURE:NORMAL:ITEM:STAT:INST 1**
(When HEADER OFF) **1**

Set and Query :MEASure? Output Items (Instantaneous, Maximum, and Minimum Values for Voltage Data)

Syntax

Instantaneous value	All Channels	**:MEASure[:NORMal]:ITEM:U:ALL <Output item>**
	ch1	**:MEASure[:NORMal]:ITEM:U:CH1(?) <Output item>**
	ch2	**:MEASure[:NORMal]:ITEM:U:CH2(?) <Output item>**
	ch3	**:MEASure[:NORMal]:ITEM:U:CH3(?) <Output item>**
	sum	**:MEASure[:NORMal]:ITEM:U:CH0(?) <Output item>**
Maximum value	All Channels	**:MEASure[:NORMal]:ITEM:U_MAX:ALL <Output item>**
	ch1	**:MEASure[:NORMal]:ITEM:U_MAX:CH1(?) <Output item>**
	ch2	**:MEASure[:NORMal]:ITEM:U_MAX:CH2(?) <Output item>**
	ch3	**:MEASure[:NORMal]:ITEM:U_MAX:CH3(?) <Output item>**
	sum	**:MEASure[:NORMal]:ITEM:U_MAX:CH0(?) <Output item>**
Minimum value	All Channels	**:MEASure[:NORMal]:ITEM:U_MIN:ALL <Output item>**
	ch1	**:MEASure[:NORMal]:ITEM:U_MIN:CH1(?) <Output item>**
	ch2	**:MEASure[:NORMal]:ITEM:U_MIN:CH2(?) <Output item>**
	ch3	**:MEASure[:NORMal]:ITEM:U_MIN:CH3(?) <Output item>**
	sum	**:MEASure[:NORMal]:ITEM:U_MIN:CH0(?) <Output item>**

Response <Output item (NR1)>

128	64	32	16	8	4	2	1
bit7	bit6	bit5	bit4	bit3	bit2	bit1	bit0
			FND	DC	AC	MN	ACDC

Description

Sets the voltage data (instantaneous value, maximum value, minimum value) output items as numerical values between 0 and 31.
For example, specify 1 to output the AC+DC rectification or 2 to output the AC+DC Umn rectification measurement value.
You can also output all rectification methods together at once. For example, you can specify 3 to output both the AC+DC rectification and AC+DC Umn rectification measurement values at the same time.
Although NRf numerical values are accepted, values to the right of the decimal are dropped.
If no items are specified directly via a :MEASure? query, the measurement values are output based on the specification of this command.

Example

Command **:MEAS:ITEM:U:CH1 1**
Specifies to output the instantaneous value of the AC/DC rectified voltage on ch1.

Query **:MEAS:ITEM:U:CH1?**

Response
(When HEADER ON) **:MEASURE:NORMAL:ITEM:U:CH1 1**
(When HEADER OFF) **1**

Set and Query :MEASure? Output Items (Instantaneous, Maximum, and Minimum Values for Current Data)

Syntax

Instantaneous value	All Channels	**:MEASure[:NORMal]:ITEM:I:ALL** <Output item>
	ch1	**:MEASure[:NORMal]:ITEM:I:CH1(?)** <Output item>
	ch2	**:MEASure[:NORMal]:ITEM:I:CH2(?)** <Output item>
	ch3	**:MEASure[:NORMal]:ITEM:I:CH3(?)** <Output item>
	sum	**:MEASure[:NORMal]:ITEM:I:CH0(?)** <Output item>
Maximum value	All Channels	**:MEASure[:NORMal]:ITEM:I_MAX:ALL** <Output item>
	ch1	**:MEASure[:NORMal]:ITEM:I_MAX:CH1(?)** <Output item>
	ch2	**:MEASure[:NORMal]:ITEM:I_MAX:CH2(?)** <Output item>
	ch3	**:MEASure[:NORMal]:ITEM:I_MAX:CH3(?)** <Output item>
	sum	**:MEASure[:NORMal]:ITEM:I_MAX:CH0(?)** <Output item>
Minimum value	All Channels	**:MEASure[:NORMal]:ITEM:I_MIN:ALL** <Output item>
	ch1	**:MEASure[:NORMal]:ITEM:I_MIN:CH1(?)** <Output item>
	ch2	**:MEASure[:NORMal]:ITEM:I_MIN:CH2(?)** <Output item>
	ch3	**:MEASure[:NORMal]:ITEM:I_MIN:CH3(?)** <Output item>
	sum	**:MEASure[:NORMal]:ITEM:I_MIN:CH0(?)** <Output item>

Response

<Output item (NR1)>

128	64	32	16	8	4	2	1
bit7	bit6	bit5	bit4	bit3	bit2	bit1	bit0
			FND	DC	AC	MN	ACDC

Description

Sets the current data (instantaneous value, maximum value, minimum value) output items as numerical values between 0 and 31.
For example, specify 1 to output the AC+DC rectification or 2 to output the AC+DC Umn rectification measurement value.
You can also output all rectification methods together at once. For example, you can specify 3 to output both the AC+DC rectification and AC+DC Umn rectification measurement values at the same time.
Although NRf numerical values are accepted, values to the right of the decimal are dropped.
If no items are specified directly via a :MEASure? query, the measurement values are output based on the specification of this command.

Example

Command **:MEAS:ITEM:I:CH1 1**

Specifies to output the instantaneous value of the AC/DC rectified current on ch1.

Query **:MEAS:ITEM:I:CH1?**

Response
(When HEADER ON) **:MEASURE:NORMAL:ITEM:I:CH1 1**
(When HEADER OFF) **1**

Set and Query :MEASure? Output Items (Instantaneous, Maximum, and Minimum Values for Active Power Data)

Syntax

Instantaneous value	All Channels	**:MEASure[:NORMal]:ITEM:P:ALL** <Output item>
	ch1	**:MEASure[:NORMal]:ITEM:P:CH1(?)** <Output item>
	ch2	**:MEASure[:NORMal]:ITEM:P:CH2(?)** <Output item>
	ch3	**:MEASure[:NORMal]:ITEM:P:CH3(?)** <Output item>
	sum	**:MEASure[:NORMal]:ITEM:P:CH0(?)** <Output item>
Maximum value	All Channels	**:MEASure[:NORMal]:ITEM:P_MAX:ALL** <Output item>
	ch1	**:MEASure[:NORMal]:ITEM:P_MAX:CH1(?)** <Output item>
	ch2	**:MEASure[:NORMal]:ITEM:P_MAX:CH2(?)** <Output item>
	ch3	**:MEASure[:NORMal]:ITEM:P_MAX:CH3(?)** <Output item>
	sum	**:MEASure[:NORMal]:ITEM:P_MAX:CH0(?)** <Output item>
Minimum value	All Channels	**:MEASure[:NORMal]:ITEM:P_MIN:ALL** <Output item>
	ch1	**:MEASure[:NORMal]:ITEM:P_MIN:CH1(?)** <Output item>
	ch2	**:MEASure[:NORMal]:ITEM:P_MIN:CH2(?)** <Output item>
	ch3	**:MEASure[:NORMal]:ITEM:P_MIN:CH3(?)** <Output item>
	sum	**:MEASure[:NORMal]:ITEM:P_MIN:CH0(?)** <Output item>

Response

<Output item (NR1)>

128	64	32	16	8	4	2	1
bit7	bit6	bit5	bit4	bit3	bit2	bit1	bit0
			FND	DC	AC	MN	ACDC

Description

Sets the active power data (instantaneous value, maximum value, minimum value) output items as numerical values between 0 and 31.
For example, specify 1 to output the AC+DC rectification or 2 to output the AC+DC Umn rectification measurement value.
You can also output all rectification methods together at once. For example, you can specify 3 to output both the AC+DC rectification and AC+DC Umn rectification measurement values at the same time.
Although NRf numerical values are accepted, values to the right of the decimal are dropped.
If no items are specified directly via a :MEASure? query, the measurement values are output based on the specification of this command.

Example

Command

:MEAS:ITEM:P:CH1 1

Specifies to output the instantaneous value of the AC/DC rectified active power on ch1.

Query

:MEAS:ITEM:P:CH1?

Response

(When HEADER ON) **:MEASURE:NORMAL:ITEM:P:CH1 1**

(When HEADER OFF) **1**

Set and Query :MEASure? Output Items (Instantaneous, Maximum, and Minimum Values for Apparent Power Data)

Syntax

Instantaneous value	All Channels	:MEASure[:NORMal]:ITEM:S:ALL <Output item>
	ch1	:MEASure[:NORMal]:ITEM:S:CH1(?) <Output item>
	ch2	:MEASure[:NORMal]:ITEM:S:CH2(?) <Output item>
	ch3	:MEASure[:NORMal]:ITEM:S:CH3(?) <Output item>
	sum	:MEASure[:NORMal]:ITEM:S:CH0(?) <Output item>
Maximum value	All Channels	:MEASure[:NORMal]:ITEM:S_MAX:ALL <Output item>
	ch1	:MEASure[:NORMal]:ITEM:S_MAX:CH1(?) <Output item>
	ch2	:MEASure[:NORMal]:ITEM:S_MAX:CH2(?) <Output item>
	ch3	:MEASure[:NORMal]:ITEM:S_MAX:CH3(?) <Output item>
	sum	:MEASure[:NORMal]:ITEM:S_MAX:CH0(?) <Output item>
Minimum value	All Channels	:MEASure[:NORMal]:ITEM:S_MIN:ALL <Output item>
	ch1	:MEASure[:NORMal]:ITEM:S_MIN:CH1(?) <Output item>
	ch2	:MEASure[:NORMal]:ITEM:S_MIN:CH2(?) <Output item>
	ch3	:MEASure[:NORMal]:ITEM:S_MIN:CH3(?) <Output item>
	sum	:MEASure[:NORMal]:ITEM:S_MIN:CH0(?) <Output item>

Response <Output item (NR1)>

128	64	32	16	8	4	2	1
bit7	bit6	bit5	bit4	bit3	bit2	bit1	bit0
			FND		AC	MN	ACDC

Description

Sets the apparent power data (instantaneous value, maximum value, minimum value) output items as numerical values between 0 and 23.
For example, specify 1 to output the AC+DC rectification or 2 to output the AC+DC Umn rectification measurement value.
You can also output all rectification methods together at once. For example, you can specify 3 to output both the AC+DC rectification and AC+DC Umn rectification measurement values at the same time.
Although NRf numerical values are accepted, values to the right of the decimal are dropped.
If no items are specified directly via a :MEASure? query, the measurement values are output based on the specification of this command.

Example

Command **:MEAS:ITEM:S:CH1 1**

Specifies to output the instantaneous value of the AC/DC rectified apparent power on ch1.

Query **:MEAS:ITEM:S:CH1?**

Response (When HEADER ON) **:MEASURE:NORMAL:ITEM:S:CH1 1**

(When HEADER OFF) **1**

Set and Query :MEASure? Output Items (Instantaneous, Maximum, and Minimum Values for Inactive Power Data)

Syntax

Instantaneous value	All Channels	**:MEASure[:NORMal]:ITEM:Q:ALL <Output item>**
	ch1	**:MEASure[:NORMal]:ITEM:Q:CH1(?) <Output item>**
	ch2	**:MEASure[:NORMal]:ITEM:Q:CH2(?) <Output item>**
	ch3	**:MEASure[:NORMal]:ITEM:Q:CH3(?) <Output item>**
	sum	**:MEASure[:NORMal]:ITEM:Q:CH0(?) <Output item>**
Maximum value	All Channels	**:MEASure[:NORMal]:ITEM:Q_MAX:ALL <Output item>**
	ch1	**:MEASure[:NORMal]:ITEM:Q_MAX:CH1(?) <Output item>**
	ch2	**:MEASure[:NORMal]:ITEM:Q_MAX:CH2(?) <Output item>**
	ch3	**:MEASure[:NORMal]:ITEM:Q_MAX:CH3(?) <Output item>**
	sum	**:MEASure[:NORMal]:ITEM:Q_MAX:CH0(?) <Output item>**
Minimum value	All Channels	**:MEASure[:NORMal]:ITEM:Q_MIN:ALL <Output item>**
	ch1	**:MEASure[:NORMal]:ITEM:Q_MIN:CH1(?) <Output item>**
	ch2	**:MEASure[:NORMal]:ITEM:Q_MIN:CH2(?) <Output item>**
	ch3	**:MEASure[:NORMal]:ITEM:Q_MIN:CH3(?) <Output item>**
	sum	**:MEASure[:NORMal]:ITEM:Q_MIN:CH0(?) <Output item>**

Response <Output item (NR1)>

128	64	32	16	8	4	2	1
bit7	bit6	bit5	bit4	bit3	bit2	bit1	bit0
			FND		AC	MN	ACDC

Description

Sets the inactive power data (instantaneous value, maximum value, minimum value) output items as numerical values between 0 and 23.
For example, specify 1 to output the AC+DC rectification or 2 to output the AC+DC Umn rectification measurement value.
You can also output all rectification methods together at once. For example, you can specify 3 to output both the AC+DC rectification and AC+DC Umn rectification measurement values at the same time.
Although NRf numerical values are accepted, values to the right of the decimal are dropped.
If no items are specified directly via a :MEASure? query, the measurement values are output based on the specification of this command.

Example

Command **:MEAS:ITEM:Q:CH1 1**
Specifies to output the instantaneous value of the AC/DC rectified inactive power on ch1.

Query **:MEAS:ITEM:Q:CH1?**

Response
(When HEADER ON) **:MEASURE:NORMAL:ITEM:Q:CH1 1**
(When HEADER OFF) **1**

Set and Query :MEASure? Output Items (Instantaneous, Maximum, and Minimum Values for Power Factor Data)

Syntax

Instantaneous value

All Channels **:MEASure[:NORMal]:ITEM:PF:ALL** <Output item>
ch1 **:MEASure[:NORMal]:ITEM:PF:CH1(?)** <Output item>
ch2 **:MEASure[:NORMal]:ITEM:PF:CH2(?)** <Output item>
ch3 **:MEASure[:NORMal]:ITEM:PF:CH3(?)** <Output item>
sum **:MEASure[:NORMal]:ITEM:PF:CH0(?)** <Output item>

Maximum value

All Channels **:MEASure[:NORMal]:ITEM:PF_MAX:ALL** <Output item>
ch1 **:MEASure[:NORMal]:ITEM:PF_MAX:CH1(?)** <Output item>
ch2 **:MEASure[:NORMal]:ITEM:PF_MAX:CH2(?)** <Output item>
ch3 **:MEASure[:NORMal]:ITEM:PF_MAX:CH3(?)** <Output item>
sum **:MEASure[:NORMal]:ITEM:PF_MAX:CH0(?)** <Output item>

Minimum value

All Channels **:MEASure[:NORMal]:ITEM:PF_MIN:ALL** <Output item>
ch1 **:MEASure[:NORMal]:ITEM:PF_MIN:CH1(?)** <Output item>
ch2 **:MEASure[:NORMal]:ITEM:PF_MIN:CH2(?)** <Output item>
ch3 **:MEASure[:NORMal]:ITEM:PF_MIN:CH3(?)** <Output item>
Sum **:MEASure[:NORMal]:ITEM:PF_MIN:CH0(?)** <Output item>

Response

<Output item (NR1)>

128	64	32	16	8	4	2	1
bit7	bit6	bit5	bit4	bit3	bit2	bit1	bit0
			FND		AC	MN	ACDC

Description

Sets the power factor data (instantaneous value, maximum value, minimum value) output items as numerical values between 0 and 23.
For example, specify 1 to output the AC+DC rectification or 2 to output the AC+DC Umn rectification measurement value.
You can also output all rectification methods together at once. For example, you can specify 3 to output both the AC+DC rectification and AC+DC Umn rectification measurement values at the same time.
Although NRf numerical values are accepted, values to the right of the decimal are dropped.
If no items are specified directly via a :MEASure? query, the measurement values are output based on the specification of this command.

Example

Command

:MEAS:ITEM:PF:CH1 1

Specifies to output the instantaneous value of the AC/DC rectified power factor on ch1.

Query

:MEAS:ITEM:PF:CH1?

Response

(When HEADER ON) **:MEASURE:NORMAL:ITEM:PF:CH1 1**
(When HEADER OFF) **1**

Set and Query :MEASure? Output Items (Instantaneous, Maximum, and Minimum Values for Phase Angle Data)

Syntax

Instantaneous value	All Channels	**:MEASure[:NORMal]:ITEM:DEG:ALL <Output item>**
	ch1	**:MEASure[:NORMal]:ITEM:DEG:CH1(?) <Output item>**
	ch2	**:MEASure[:NORMal]:ITEM:DEG:CH2(?) <Output item>**
	ch3	**:MEASure[:NORMal]:ITEM:DEG:CH3(?) <Output item>**
	sum	**:MEASure[:NORMal]:ITEM:DEG:CH0(?) <Output item>**
Maximum value	All Channels	**:MEASure[:NORMal]:ITEM:DEG_MAX:ALL <Output item>**
	ch1	**:MEASure[:NORMal]:ITEM:DEG_MAX:CH1(?) <Output item>**
	ch2	**:MEASure[:NORMal]:ITEM:DEG_MAX:CH2(?) <Output item>**
	ch3	**:MEASure[:NORMal]:ITEM:DEG_MAX:CH3(?) <Output item>**
	sum	**:MEASure[:NORMal]:ITEM:DEG_MAX:CH0(?) <Output item>**
Minimum value	All Channels	**:MEASure[:NORMal]:ITEM:DEG_MIN:ALL <Output item>**
	ch1	**:MEASure[:NORMal]:ITEM:DEG_MIN:CH1(?) <Output item>**
	ch2	**:MEASure[:NORMal]:ITEM:DEG_MIN:CH2(?) <Output item>**
	ch3	**:MEASure[:NORMal]:ITEM:DEG_MIN:CH3(?) <Output item>**
	sum	**:MEASure[:NORMal]:ITEM:DEG_MIN:CH0(?) <Output item>**
Response	<Output item (NR1)>	

128	64	32	16	8	4	2	1
bit7	bit6	bit5	bit4	bit3	bit2	bit1	bit0
			FND		AC	MN	ACDC

Description

Sets the phase angle data (instantaneous value, maximum value, minimum value) output items as numerical values between 0 and 20.
For example, specify 4 to output the AC rectification or 16 to output the FND rectification measurement value.
You can also output all rectification methods together at once. For example, you can specify 20 to output both the AC rectification and FND rectification measurement values at the same time.
Although NRf numerical values are accepted, values to the right of the decimal are dropped.
If no items are specified directly via a :MEASure? query, the measurement values are output based on the specification of this command.

Example

Command **:MEAS:ITEM:DEG:CH1 4**

Specifies to output the instantaneous value of the AC rectified power factor on ch1.

Query **:MEAS:ITEM:DEG:CH1?**

Response (When HEADER ON) **:MEASURE:NORMAL:ITEM:DEG:CH1 4**

(When HEADER OFF) **4**

Set and Query :MEASure? Output Items (Instantaneous, Maximum, and Minimum Values for Voltage Frequency Data)

Syntax

Instantaneous value	All Channels	**:MEASure[:NORMal]:ITEM:FREQU:ALL <Output item>**
	ch1	**:MEASure[:NORMal]:ITEM:FREQU:CH1(?) <Output item>**
	ch2	**:MEASure[:NORMal]:ITEM:FREQU:CH2(?) <Output item>**
	ch3	**:MEASure[:NORMal]:ITEM:FREQU:CH3(?) <Output item>**
Maximum value	All Channels	**:MEASure[:NORMal]:ITEM:FREQU_MAX:ALL <Output item>**
	ch1	**:MEASure[:NORMal]:ITEM:FREQU_MAX:CH1(?) <Output item>**
	ch2	**:MEASure[:NORMal]:ITEM:FREQU_MAX:CH2(?) <Output item>**
	ch3	**:MEASure[:NORMal]:ITEM:FREQU_MAX:CH3(?) <Output item>**
Minimum value	All Channels	**:MEASure[:NORMal]:ITEM:FREQU_MIN:ALL <Output item>**
	ch1	**:MEASure[:NORMal]:ITEM:FREQU_MIN:CH1(?) <Output item>**
	ch2	**:MEASure[:NORMal]:ITEM:FREQU_MIN:CH2(?) <Output item>**
	ch3	**:MEASure[:NORMal]:ITEM:FREQU_MIN:CH3(?) <Output item>**

Response <Output item (NR1)>

128	64	32	16	8	4	2	1
bit7	bit6	bit5	bit4	bit3	bit2	bit1	bit0
							FREQU

Description

Sets the voltage frequency data (instantaneous value, maximum value, minimum value) output items as numerical values between 0 and 1.
Although NRf numerical values are accepted, values to the right of the decimal are dropped.
If no items are specified directly via a :MEASure? query, the measurement values are output based on the specification of this command.

Example

Command **:MEAS:ITEM:FREQU:CH1 1**

Specifies to output the instantaneous value of the AC/DC rectified voltage frequency on ch1.

Query **:MEAS:ITEM:FREQU:CH1?**

Response (When HEADER ON) **:MEASURE:NORMAL:ITEM:FREQU:CH1 1**

(When HEADER OFF) **1**

Set and Query :MEASure? Output Items (Instantaneous, Maximum, and Minimum Values for Current Frequency Data)

Syntax

Instantaneous value	All Channels	**:MEASure[:NORMal]:ITEM:FREQI:ALL <Output item>**
	ch1	**:MEASure[:NORMal]:ITEM:FREQI:CH1(?) <Output item>**
	ch2	**:MEASure[:NORMal]:ITEM:FREQI:CH2(?) <Output item>**
	ch3	**:MEASure[:NORMal]:ITEM:FREQI:CH3(?) <Output item>**
Maximum value	All Channels	**:MEASure[:NORMal]:ITEM:FREQI_MAX:ALL <Output item>**
	ch1	**:MEASure[:NORMal]:ITEM:FREQI_MAX:CH1(?) <Output item>**
	ch2	**:MEASure[:NORMal]:ITEM:FREQI_MAX:CH2(?) <Output item>**
	ch3	**:MEASure[:NORMal]:ITEM:FREQI_MAX:CH3(?) <Output item>**
Minimum value	All Channels	**:MEASure[:NORMal]:ITEM:FREQI_MIN:ALL <Output item>**
	ch1	**:MEASure[:NORMal]:ITEM:FREQI_MIN:CH1(?) <Output item>**
	ch2	**:MEASure[:NORMal]:ITEM:FREQI_MIN:CH2(?) <Output item>**
	ch3	**:MEASure[:NORMal]:ITEM:FREQI_MIN:CH3(?) <Output item>**

Response <Output item (NR1)>

128	64	32	16	8	4	2	1
bit7	bit6	bit5	bit4	bit3	bit2	bit1	bit0
							FREQI

Description

Sets the current frequency data (instantaneous value, maximum value, minimum value) output items as numerical values between 0 and 1.
Although NRf numerical values are accepted, values to the right of the decimal are dropped.
If no items are specified directly via a :MEASure? query, the measurement values are output based on the specification of this command.

Example

Command **:MEAS:ITEM:FREQI:CH1 1**

Specifies to output the instantaneous value of the AC/DC rectified current frequency on ch1.

Query **:MEAS:ITEM:FREQI:CH1?**

Response
(When HEADER ON) **:MEASURE:NORMAL:ITEM:FREQI:CH1 1**
(When HEADER OFF) **1**

Set and Query:MEASure? Output Items (Integration Time)

Syntax

:MEASure[:NORMal]:ITEM:TIME(?) <Output item>

Response <Output item (NR1)>

128	64	32	16	8	4	2	1
bit7	bit6	bit5	bit4	bit3	bit2	bit1	bit0
							TIME

Description

Sets the integration time data output to a numerical value between 0 and 1.
Although NRf numerical values are accepted, values to the right of the decimal are dropped.
If no items are specified directly via a :MEASure? query, the measurement values are output based on the specification of this command.

Example

Command **:MEAS:ITEM:TIME 1**

Specifies to output the integration time.

Query **:MEAS:ITEM:TIME?**

Response (When HEADER ON) **:MEASURE:NORMAL:ITEM:TIME 1**

(When HEADER OFF) **1**

Set and Query:MEASure? Output Items (Current Integration [Total Sum])

Syntax

All Channels **:MEASure[:NORMal]:ITEM:IH:ALL <Output item>**

ch1 **:MEASure[:NORMal]:ITEM:IH:CH1(?) <Output item>**

ch2 **:MEASure[:NORMal]:ITEM:IH:CH2(?) <Output item>**

ch3 **:MEASure[:NORMal]:ITEM:IH:CH3(?) <Output item>**

Response <Output item (NR1)>

128	64	32	16	8	4	2	1
bit7	bit6	bit5	bit4	bit3	bit2	bit1	bit0
				DC		MN	ACDC

Description

Sets the current integration (total sum) data output items to a numerical value between 0 and 11.
For example, specify 1 to output the AC+DC rectification or 2 to output the AC+DC Umn rectification measurement value.
You can also output all rectification methods together at once. For example, you can specify 3 to output both the AC+DC rectification and AC+DC Umn rectification measurement values at the same time.
Although NRf numerical values are accepted, values to the right of the decimal are dropped.
If no items are specified directly via a :MEASure? query, the measurement values are output based on the specification of this command.

Example

Command **:MEAS:ITEM:IH:CH1 1**

Specifies to output the instantaneous value of the AC/DC rectified current integration (total sum).

Query **:MEAS:ITEM:IH:CH1?**

Response (When HEADER ON) **:MEASURE:NORMAL:ITEM:IH:CH1 1**

(When HEADER OFF) **1**

Set and Query:MEASure? Output Items (Positive Current Integration)

Syntax

All Channels **:MEASure[:NORMal]:ITEM:PIH:ALL** <Output item>
ch1 **:MEASure[:NORMal]:ITEM:PIH:CH1(?)** <Output item>
ch2 **:MEASure[:NORMal]:ITEM:PIH:CH2(?)** <Output item>
ch3 **:MEASure[:NORMal]:ITEM:PIH:CH3(?)** <Output item>

Response <Output item (NR1)>

128	64	32	16	8	4	2	1
bit7	bit6	bit5	bit4	bit3	bit2	bit1	bit0
				DC			

Description

Sets the positive current integration data output items to a numerical value between 0 and 8.
For example, specify 8 to output the DC rectification measurement value.
Although NRf numerical values are accepted, values to the right of the decimal are dropped.
If no items are specified directly via a :MEASure? query, the measurement values are output based on the specification of this command.

Example

Command **:MEAS:ITEM:PIH:CH1 8**
Specifies to output the instantaneous value of the DC rectified positive current integration.

Query **:MEAS:ITEM:PIH:CH1?**

Response
(When HEADER ON) **:MEASURE:NORMAL:ITEM:PIH:CH1 8**
(When HEADER OFF) **8**

Set and Query:MEASure? Output Items (Negative Current Integration)

Syntax

All Channels **:MEASure[:NORMal]:ITEM:MIH:ALL** <Output item>
ch1 **:MEASure[:NORMal]:ITEM:MIH:CH1(?)** <Output item>
ch2 **:MEASure[:NORMal]:ITEM:MIH:CH2(?)** <Output item>
ch3 **:MEASure[:NORMal]:ITEM:MIH:CH3(?)** <Output item>

Response <Output item (NR1)>

128	64	32	16	8	4	2	1
bit7	bit6	bit5	bit4	bit3	bit2	bit1	bit0
				DC			

Description

Sets the negative current integration data output items to a numerical value between 0 and 8.
For example, specify 8 to output the DC rectification measurement value.
Although NRf numerical values are accepted, values to the right of the decimal are dropped.
If no items are specified directly via a :MEASure? query, the measurement values are output based on the specification of this command.

Example

Command **:MEAS:ITEM:MIH:CH1 8**
Specifies to output the instantaneous value of the DC rectified negative current integration.

Query **:MEAS:ITEM:MIH:CH1?**

Response
(When HEADER ON) **:MEASURE:NORMAL:ITEM:MIH:CH1 8**
(When HEADER OFF) **8**

Set and Query:MEASure? Output Items (Active Power Integration [Total Sum])

Syntax

All Channels **:MEASure[:NORMal]:ITEM:WP:ALL** <Output item>
ch1 **:MEASure[:NORMal]:ITEM:WP:CH1(?)** <Output item>
ch2 **:MEASure[:NORMal]:ITEM:WP:CH2(?)** <Output item>
ch3 **:MEASure[:NORMal]:ITEM:WP:CH3(?)** <Output item>
sum **:MEASure[:NORMal]:ITEM:WP:CH0(?)** <Output item>

Response <Output item (NR1)>

128	64	32	16	8	4	2	1
bit7	bit6	bit5	bit4	bit3	bit2	bit1	bit0
				DC		MN	ACDC

Description

Sets the active power integration (total sum) data output items to a numerical value between 0 and 11.
For example, specify 1 to output the AC+DC rectification or 2 to output the AC+DC Umn rectification measurement value.
You can also output all rectification methods together at once. For example, you can specify 3 to output both the AC+DC rectification and AC+DC Umn rectification measurement values at the same time.
Although NRf numerical values are accepted, values to the right of the decimal are dropped.
If no items are specified directly via a :MEASure? query, the measurement values are output based on the specification of this command.

Example

Command **:MEAS:ITEM:WP:CH1 1**

Specifies to output the instantaneous value of the AC/DC rectified active power integration (total sum).

Query **:MEAS:ITEM:WP:CH1?**

Response
(When HEADER ON) **:MEASURE:NORMAL:ITEM:WP:CH1 1**
(When HEADER OFF) **1**

Set and Query:MEASure? Output Items (Positive Active Power Integration)

Syntax

All Channels **:MEASure[:NORMal]:ITEM:PWP:ALL** <Output item>
ch1 **:MEASure[:NORMal]:ITEM:PWP:CH1(?)** <Output item>
ch2 **:MEASure[:NORMal]:ITEM:PWP:CH2(?)** <Output item>
ch3 **:MEASure[:NORMal]:ITEM:PWP:CH3(?)** <Output item>
sum **:MEASure[:NORMal]:ITEM:PWP:CH0(?)** <Output item>

Response <Output item (NR1)>

128	64	32	16	8	4	2	1
bit7	bit6	bit5	bit4	bit3	bit2	bit1	bit0
				DC		MN	ACDC

Description

Sets the positive active power integration data output items to a numerical value between 0 and 11.
For example, specify 1 to output the AC+DC rectification or 2 to output the AC+DC Umn rectification measurement value.
You can also output all rectification methods together at once. For example, you can specify 3 to output both the AC+DC rectification and AC+DC Umn rectification measurement values at the same time.
Although NRf numerical values are accepted, values to the right of the decimal are dropped.
If no items are specified directly via a :MEASure? query, the measurement values are output based on the specification of this command.

Example

Command **:MEAS:ITEM:PWP:CH1 1**

Specifies to output the instantaneous value of the AC/DC rectified positive active power integration.

Query **:MEAS:ITEM:PWP:CH1?**

Response
(When HEADER ON) **:MEASURE:NORMAL:ITEM:PWP:CH1 1**
(When HEADER OFF) **1**

Set and Query:MEASure? Output Items (Negative Active Power Integration)

Syntax

All Channels **:MEASure[:NORMal]:ITEM:MWP:ALL** <Output item>
ch1 **:MEASure[:NORMal]:ITEM:MWP:CH1(?)** <Output item>
ch2 **:MEASure[:NORMal]:ITEM:MWP:CH2(?)** <Output item>
ch3 **:MEASure[:NORMal]:ITEM:MWP:CH3(?)** <Output item>
sum **:MEASure[:NORMal]:ITEM:MWP:CH0(?)** <Output item>

Response <Output item (NR1)>

128	64	32	16	8	4	2	1
bit7	bit6	bit5	bit4	bit3	bit2	bit1	bit0
				DC		MN	ACDC

Description

Sets the negative active power integration data output items to a numerical value between 0 and 11.
For example, specify 1 to output the AC+DC rectification or 2 to output the AC+DC Umn rectification measurement value.
You can also output all rectification methods together at once. For example, you can specify 3 to output both the AC+DC rectification and AC+DC Umn rectification measurement values at the same time.
Although NRf numerical values are accepted, values to the right of the decimal are dropped.
If no items are specified directly via a :MEASure? query, the measurement values are output based on the specification of this command.

Example

Command **:MEAS:ITEM:MWP:CH1 1**
Specifies to output the instantaneous value of the AC/DC rectified negative active power integration.

Query **:MEAS:ITEM:MWP:CH1?**

Response
(When HEADER ON) **:MEASURE:NORMAL:ITEM:MWP:CH1 1**
(When HEADER OFF) **1**

Set and Query :MEASure? Output Items (Instantaneous, Maximum, and Minimum Values for the Voltage Waveform Peak)

Syntax

Instantaneous value
All Channels **:MEASure[:NORMal]:ITEM:UPK:ALL** <Output item>
ch1 **:MEASure[:NORMal]:ITEM:UPK:CH1(?)** <Output item>
ch2 **:MEASure[:NORMal]:ITEM:UPK:CH2(?)** <Output item>
ch3 **:MEASure[:NORMal]:ITEM:UPK:CH3(?)** <Output item>

Maximum value
All Channels **:MEASure[:NORMal]:ITEM:UPK_MAX:ALL** <Output item>
ch1 **:MEASure[:NORMal]:ITEM:UPK_MAX:CH1(?)** <Output item>
ch2 **:MEASure[:NORMal]:ITEM:UPK_MAX:CH2(?)** <Output item>
ch3 **:MEASure[:NORMal]:ITEM:UPK_MAX:CH3(?)** <Output item>

Minimum value
All Channels **:MEASure[:NORMal]:ITEM:UPK_MIN:ALL** <Output item>
ch1 **:MEASure[:NORMal]:ITEM:UPK_MIN:CH1(?)** <Output item>
ch2 **:MEASure[:NORMal]:ITEM:UPK_MIN:CH2(?)** <Output item>
ch3 **:MEASure[:NORMal]:ITEM:UPK_MIN:CH3(?)** <Output item>

Response <Output item (NR1)>

128	64	32	16	8	4	2	1
bit7	bit6	bit5	bit4	bit3	bit2	bit1	bit0
							UPK

Description

Sets the voltage waveform peak value data (instantaneous value, maximum value, minimum value) output items as numerical values between 0 and 1.
Although NRf numerical values are accepted, values to the right of the decimal are dropped.
If no items are specified directly via a :MEASure? query, the measurement values are output based on the specification of this command.

Example

Command **:MEAS:ITEM:UPK:CH1 1**
Specifies to output the instantaneous value of the AC/DC rectified voltage waveform peak value on ch1.

Query **:MEAS:ITEM:UPK:CH1?**

Response
(When HEADER ON) **:MEASURE:NORMAL:ITEM:UPK:CH1 1**
(When HEADER OFF) **1**

Set and Query :MEASure? Output Items (Instantaneous, Maximum, and Minimum Values for the Current Waveform Peak)

Syntax

Instantaneous value
- All Channels **:MEASure[:NORMal]:ITEM:IPK:ALL** <Output item>
- ch1 **:MEASure[:NORMal]:ITEM:IPK:CH1(?)** <Output item>
- ch2 **:MEASure[:NORMal]:ITEM:IPK:CH2(?)** <Output item>
- ch3 **:MEASure[:NORMal]:ITEM:IPK:CH3(?)** <Output item>

Maximum value
- All Channels **:MEASure[:NORMal]:ITEM:IPK_MAX:ALL** <Output item>
- ch1 **:MEASure[:NORMal]:ITEM:IPK_MAX:CH1(?)** <Output item>
- ch2 **:MEASure[:NORMal]:ITEM:IPK_MAX:CH2(?)** <Output item>
- ch3 **:MEASure[:NORMal]:ITEM:IPK_MAX:CH3(?)** <Output item>

Minimum value
- All Channels **:MEASure[:NORMal]:ITEM:IPK_MIN:ALL** <Output item>
- ch1 **:MEASure[:NORMal]:ITEM:IPK_MIN:CH1(?)** <Output item>
- ch2 **:MEASure[:NORMal]:ITEM:IPK_MIN:CH2(?)** <Output item>
- ch3 **:MEASure[:NORMal]:ITEM:IPK_MIN:CH3(?)** <Output item>

Response <Output item (NR1)>

128	64	32	16	8	4	2	1
bit7	bit6	bit5	bit4	bit3	bit2	bit1	bit0
							IPK

Description

Sets the current waveform peak value data (instantaneous value, maximum value, minimum value) output items as numerical values between 0 and 1.
Although NRf numerical values are accepted, values to the right of the decimal are dropped.
If no items are specified directly via a :MEASure? query, the measurement values are output based on the specification of this command.

Example

Command **:MEAS:ITEM:IPK:CH1 1**

Specifies to output the instantaneous value of the AC/DC rectified current waveform peak value on ch1.

Query **:MEAS:ITEM:IPK:CH1?**

Response
(When HEADER ON) **:MEASURE:NORMAL:ITEM:IPK:CH1 1**
(When HEADER OFF) **1**

Set and Query :MEASure? Output Items (Instantaneous, Maximum, and Minimum Values for Efficiency Factor Data)

Syntax

Instantaneous value **:MEASure[:NORMal]:ITEM:EFFiciency(?)** <Output item>

Maximum value **:MEASure[:NORMal]:ITEM:EFF_MAX(?)** <Output item>

Minimum Value **:MEASure[:NORMal]:ITEM:EFF_MIN(?)** <Output item>

Response <Output item (NR1)>

128	64	32	16	8	4	2	1
bit7	bit6	bit5	bit4	bit3	bit2	bit1	bit0
						EFFI2	EFFI1

Description

Sets the efficiency factor data (instantaneous value, maximum value, minimum value) output items as numerical values between 0 and 3.
Although NRf numerical values are accepted, values to the right of the decimal are dropped.
If no items are specified directly via a :MEASure? query, the measurement values are output based on the specification of this command.

Example

Command **:MEAS:ITEM:EFF 1**

Specifies to output the instantaneous value of efficiency factor data 1.

Query **:MEAS:ITEM:EFF1?**

Response
(When HEADER ON) **:MEASURE:NORMAL:ITEM:EFICIENCY 1**
(When HEADER OFF) **1**

Set and Query :MEASure? Output Items (Instantaneous, Maximum, and Minimum Values for Voltage Crest Factor Data)

Syntax

Instantaneous value	All Channels	**:MEASure[:NORMal]:ITEM:UCFactor:ALL** <Output item>
	ch1	**:MEASure[:NORMal]:ITEM:UCFactor:CH1(?)** <Output item>
	ch2	**:MEASure[:NORMal]:ITEM:UCFactor:CH2(?)** <Output item>
	ch3	**:MEASure[:NORMal]:ITEM:UCFactor:CH3(?)** <Output item>
Maximum value	All Channels	**:MEASure[:NORMal]:ITEM:UCF_MAX:ALL** <Output item>
	ch1	**:MEASure[:NORMal]:ITEM:UCF_MAX:CH1(?)** <Output item>
	ch2	**:MEASure[:NORMal]:ITEM:UCF_MAX:CH2(?)** <Output item>
	ch3	**:MEASure[:NORMal]:ITEM:UCF_MAX:CH3(?)** <Output item>
Minimum value	All Channels	**:MEASure[:NORMal]:ITEM:UCF_MIN:ALL** <Output item>
	ch1	**:MEASure[:NORMal]:ITEM:UCF_MIN:CH1(?)** <Output item>
	ch2	**:MEASure[:NORMal]:ITEM:UCF_MIN:CH2(?)** <Output item>
	ch3	**:MEASure[:NORMal]:ITEM:UCF_MIN:CH3(?)** <Output item>

Response <Output item (NR1)>

128	64	32	16	8	4	2	1
bit7	bit6	bit5	bit4	bit3	bit2	bit1	bit0
							UCF

Description

Sets the voltage crest factor data (instantaneous value, maximum value, minimum value) output items as numerical values between 0 and 1.
Although NRf numerical values are accepted, values to the right of the decimal are dropped.
If no items are specified directly via a :MEASure? query, the measurement values are output based on the specification of this command.

Example

Command **:MEAS:ITEM:UCF:CH1 1**

Specifies to output the instantaneous value of the voltage crest factor on ch1.

Query **:MEAS:ITEM:UCF:CH1?**

Response
(When HEADER ON) **:MEASURE:NORMAL:ITEM:UCFACTOR:CH1 1**
(When HEADER OFF) **1**

Set and Query :MEASure? Output Items (Instantaneous, Maximum, and Minimum Values for Current Crest Factor Data)

Syntax

Instantaneous value
- All Channels **:MEASure[:NORMal]:ITEM:ICFactor:ALL <Output item>**
- ch1 **:MEASure[:NORMal]:ITEM:ICFactor:CH1(?) <Output item>**
- ch2 **:MEASure[:NORMal]:ITEM:ICFactor:CH2(?) <Output item>**
- ch3 **:MEASure[:NORMal]:ITEM:ICFactor:CH3(?) <Output item>**

Maximum value
- All Channels **:MEASure[:NORMal]:ITEM:ICF_MAX:ALL <Output item>**
- ch1 **:MEASure[:NORMal]:ITEM:ICF_MAX:CH1(?) <Output item>**
- ch2 **:MEASure[:NORMal]:ITEM:ICF_MAX:CH2(?) <Output item>**
- ch3 **:MEASure[:NORMal]:ITEM:ICF_MAX:CH3(?) <Output item>**

Minimum value
- All Channels **:MEASure[:NORMal]:ITEM:ICF_MIN:ALL <Output item>**
- ch1 **:MEASure[:NORMal]:ITEM:ICF_MIN:CH1(?) <Output item>**
- ch2 **:MEASure[:NORMal]:ITEM:ICF_MIN:CH2(?) <Output item>**
- ch3 **:MEASure[:NORMal]:ITEM:ICF_MIN:CH3(?) <Output item>**

Response

<Output item (NR1)>

128	64	32	16	8	4	2	1
bit7	bit6	bit5	bit4	bit3	bit2	bit1	bit0
							ICF

Description

Sets the current crest factor data (instantaneous value, maximum value, minimum value) output items as numerical values between 0 and 1.
Although NRf numerical values are accepted, values to the right of the decimal are dropped.
If no items are specified directly via a :MEASure? query, the measurement values are output based on the specification of this command.

Example

Command **:MEAS:ITEM:ICF:CH1 1**

Specifies to output the instantaneous value of the current crest factor on ch1.

Query **:MEAS:ITEM:ICF:CH1?**

Response
(When HEADER ON) **:MEASURE:NORMAL:ITEM:ICFACTOR:CH1 1**
(When HEADER OFF) **1**

Set and Query:MEASure? Output Items (Time Average Current)

Syntax

- All Channels **:MEASure[:NORMal]:ITEM:ITAVerage:ALL <Output item>**
- ch1 **:MEASure[:NORMal]:ITEM:ITAVerage:CH1(?) <Output item>**
- ch2 **:MEASure[:NORMal]:ITEM:ITAVerage:CH2(?) <Output item>**
- ch3 **:MEASure[:NORMal]:ITEM:ITAVerage:CH3(?) <Output item>**

Response

<Output item (NR1)>

128	64	32	16	8	4	2	1
bit7	bit6	bit5	bit4	bit3	bit2	bit1	bit0
				DC		MN	ACDC

Description

Sets the time average current data output items to a numerical value between 0 and 11.
For example, specify 1 to output the AC+DC rectification or 2 to output the AC+DC Umn rectification measurement value.
You can also output all rectification methods together at once. For example, you can specify 3 to output both the AC+DC rectification and AC+DC Umn rectification measurement values at the same time.
Although NRf numerical values are accepted, values to the right of the decimal are dropped.
If no items are specified directly via a :MEASure? query, the measurement values are output based on the specification of this command.

Example

Command **:MEAS:ITEM:ITAV:CH1 1**

Specifies to output the AC/DC rectified time average current data on ch1.

Query **:MEAS:ITEM:ITAV:CH1?**

Response
(When HEADER ON) **:MEASURE:NORMAL:ITEM:ITAVERAGE:CH1 1**
(When HEADER OFF) **1**

Set and Query:MEASure? Output Items (Time Average Active Power)

Syntax

All Channels **:MEASure[:NORMal]:ITEM:PTAVerage:ALL <Output item>**
ch1 **:MEASure[:NORMal]:ITEM:PTAVerage:CH1(?) <Output item>**
ch2 **:MEASure[:NORMal]:ITEM:PTAVerage:CH2(?) <Output item>**
ch3 **:MEASure[:NORMal]:ITEM:PTAVerage:CH3(?) <Output item>**
sum **:MEASure[:NORMal]:ITEM:PTAVerage:CH0(?) <Output item>**

Response <Output item (NR1)>

128	64	32	16	8	4	2	1
bit7	bit6	bit5	bit4	bit3	bit2	bit1	bit0
				DC		MN	ACDC

Description

Sets the time average active power data output items to a numerical value between 0 and 11.
For example, specify 1 to output the AC+DC rectification or 2 to output the AC+DC Umn rectification measurement value.
You can also output all rectification methods together at once. For example, you can specify 3 to output both the AC+DC rectification and AC+DC Umn rectification measurement values at the same time.
Although NRf numerical values are accepted, values to the right of the decimal are dropped.
If no items are specified directly via a :MEASure? query, the measurement values are output based on the specification of this command.

Example

Command **:MEAS:ITEM:PTAV:CH1 1**
Specifies to output the AC/DC rectified time average active power data on ch1.

Query **:MEAS:ITEM:PTAV:CH1?**

Response
(When HEADER ON) **:MEASURE:NORMAL:ITEM:PTAVERAGE:CH1 1**
(When HEADER OFF) **1**

Set and Query :MEASure? Output Items (Instantaneous, Maximum, and Minimum Values for the Voltage Ripple Factor)

Syntax

Instantaneous value
All Channels **:MEASure[:NORMal]:ITEM:URF:ALL <Output item>**
ch1 **:MEASure[:NORMal]:ITEM:URF:CH1(?) <Output item>**
ch2 **:MEASure[:NORMal]:ITEM:URF:CH2(?) <Output item>**
ch3 **:MEASure[:NORMal]:ITEM:URF:CH3(?) <Output item>**

Maximum value
All Channels **:MEASure[:NORMal]:ITEM:URF_MAX:ALL <Output item>**
ch1 **:MEASure[:NORMal]:ITEM:URF_MAX:CH1(?) <Output item>**
ch2 **:MEASure[:NORMal]:ITEM:URF_MAX:CH2(?) <Output item>**
ch3 **:MEASure[:NORMal]:ITEM:URF_MAX:CH3(?) <Output item>**

Minimum value
All Channels **:MEASure[:NORMal]:ITEM:URF_MIN:ALL <Output item>**
ch1 **:MEASure[:NORMal]:ITEM:URF_MIN:CH1(?) <Output item>**
ch2 **:MEASure[:NORMal]:ITEM:URF_MIN:CH2(?) <Output item>**
ch3 **:MEASure[:NORMal]:ITEM:URF_MIN:CH3(?) <Output item>**

Response <Output item (NR1)>

128	64	32	16	8	4	2	1
bit7	bit6	bit5	bit4	bit3	bit2	bit1	bit0
							URF

Description

Sets the voltage ripple factor data (instantaneous value, maximum value, minimum value) output items as numerical values between 0 and 1.
Although NRf numerical values are accepted, values to the right of the decimal are dropped.
If no items are specified directly via a :MEASure? query, the measurement values are output based on the specification of this command.

Example

Command **:MEAS:ITEM:URF:CH1 1**
Specifies to output the instantaneous value of the voltage ripple factor on ch1.

Query **:MEAS:ITEM:URF:CH1?**

Response
(When HEADER ON) **:MEASURE:NORMAL:ITEM:URF:CH1 1**
(When HEADER OFF) **1**

Set and Query :MEASure? Output Items (Instantaneous, Maximum, and Minimum Values for the Current Ripple Factor)

Syntax

Instantaneous value	All Channels	**:MEASure[:NORMal]:ITEM:IRF:ALL <Output item>**
	ch1	**:MEASure[:NORMal]:ITEM:IRF:CH1(?) <Output item>**
	ch2	**:MEASure[:NORMal]:ITEM:IRF:CH2(?) <Output item>**
	ch3	**:MEASure[:NORMal]:ITEM:IRF:CH3(?) <Output item>**
Maximum value	All Channels	**:MEASure[:NORMal]:ITEM:IRF_MAX:ALL <Output item>**
	ch1	**:MEASure[:NORMal]:ITEM:IRF_MAX:CH1(?) <Output item>**
	ch2	**:MEASure[:NORMal]:ITEM:IRF_MAX:CH2(?) <Output item>**
	ch3	**:MEASure[:NORMal]:ITEM:IRF_MAX:CH3(?) <Output item>**
Minimum value	All Channels	**:MEASure[:NORMal]:ITEM:IRF_MIN:ALL <Output item>**
	ch1	**:MEASure[:NORMal]:ITEM:IRF_MIN:CH1(?) <Output item>**
	ch2	**:MEASure[:NORMal]:ITEM:IRF_MIN:CH2(?) <Output item>**
	ch3	**:MEASure[:NORMal]:ITEM:IRF_MIN:CH3(?) <Output item>**

Response

<Output item (NR1)>

128	64	32	16	8	4	2	1
bit7	bit6	bit5	bit4	bit3	bit2	bit1	bit0
							IRF

Description

Sets the current ripple factor data (instantaneous value, maximum value, minimum value) output items as numerical values between 0 and 1.
Although NRf numerical values are accepted, values to the right of the decimal are dropped.
If no items are specified directly via a :MEASure? query, the measurement values are output based on the specification of this command.

Example

Command **:MEAS:ITEM:IRF:CH1 1**

Specifies to output the instantaneous value of the current ripple factor on ch1.

Query **:MEAS:ITEM:IRF:CH1?**

Response

(When HEADER ON) **:MEASURE:NORMAL:ITEM:IRF:CH1 1**

(When HEADER OFF) **1**

Set and Query :MEASure? Output Items (Instantaneous, Maximum, and Minimum Values for Total Harmonic Wave Voltage Distortion Factor Data)

Syntax

Instantaneous value	All Channels	**:MEASure[:NORMal]:ITEM:UTHD:ALL <Output item>**
	ch1	**:MEASure[:NORMal]:ITEM:UTHD:CH1(?) <Output item>**
	ch2	**:MEASure[:NORMal]:ITEM:UTHD:CH2(?) <Output item>**
	ch3	**:MEASure[:NORMal]:ITEM:UTHD:CH3(?) <Output item>**
Maximum value	All Channels	**:MEASure[:NORMal]:ITEM:UTHD_MAX:ALL <Output item>**
	ch1	**:MEASure[:NORMal]:ITEM:UTHD_MAX:CH1(?) <Output item>**
	ch2	**:MEASure[:NORMal]:ITEM:UTHD_MAX:CH2(?) <Output item>**
	ch3	**:MEASure[:NORMal]:ITEM:UTHD_MAX:CH3(?) <Output item>**
Minimum value	All Channels	**:MEASure[:NORMal]:ITEM:UTHD_MIN:ALL <Output item>**
	ch1	**:MEASure[:NORMal]:ITEM:UTHD_MIN:CH1(?) <Output item>**
	ch2	**:MEASure[:NORMal]:ITEM:UTHD_MIN:CH2(?) <Output item>**
	ch3	**:MEASure[:NORMal]:ITEM:UTHD_MIN:CH3(?) <Output item>**

Response

<Output item (NR1)>

128	64	32	16	8	4	2	1
bit7	bit6	bit5	bit4	bit3	bit2	bit1	bit0
							UTHD

Description

Sets the total harmonic wave voltage distortion factor data (instantaneous value, maximum value, minimum value) output items as numerical values between 0 and 1.
Although NRf numerical values are accepted, values to the right of the decimal are dropped.
If no items are specified directly via a :MEASure? query, the measurement values are output based on the specification of this command.

Example

Command **:MEAS:ITEM:UTHD:CH1 1**

Specifies to output the instantaneous value of the total harmonic wave voltage distortion factor on ch1.

Query **:MEAS:ITEM:UTHD:CH1?**

Response

(When HEADER ON) **:MEASURE:NORMAL:ITEM:UTHD:CH1 1**

(When HEADER OFF) **1**

Set and Query :MEASure? Output Items (Instantaneous, Maximum, and Minimum Values for Total Harmonic Wave Current Distortion Factor Data)

Syntax

Instantaneous value	All Channels	**:MEASure[:NORMal]:ITEM:ITHD:ALL <Output item>**
	ch1	**:MEASure[:NORMal]:ITEM:ITHD:CH1(?) <Output item>**
	ch2	**:MEASure[:NORMal]:ITEM:ITHD:CH2(?) <Output item>**
	ch3	**:MEASure[:NORMal]:ITEM:ITHD:CH3(?) <Output item>**
Maximum value	All Channels	**:MEASure[:NORMal]:ITEM:ITHD_MAX:ALL <Output item>**
	ch1	**:MEASure[:NORMal]:ITEM:ITHD_MAX:CH1(?) <Output item>**
	ch2	**:MEASure[:NORMal]:ITEM:ITHD_MAX:CH2(?) <Output item>**
	ch3	**:MEASure[:NORMal]:ITEM:ITHD_MAX:CH3(?) <Output item>**
Minimum value	All Channels	**:MEASure[:NORMal]:ITEM:ITHD_MIN:ALL <Output item>**
	ch1	**:MEASure[:NORMal]:ITEM:ITHD_MIN:CH1(?) <Output item>**
	ch2	**:MEASure[:NORMal]:ITEM:ITHD_MIN:CH2(?) <Output item>**
	ch3	**:MEASure[:NORMal]:ITEM:ITHD_MIN:CH3(?) <Output item>**

Response <Output item (NR1)>

128	64	32	16	8	4	2	1
bit7	bit6	bit5	bit4	bit3	bit2	bit1	bit0
							ITHD

Description

Sets the total harmonic wave current distortion factor data (instantaneous value, maximum value, minimum value) output items as numerical values between 0 and 1. Although NRf numerical values are accepted, values to the right of the decimal are dropped.
If no items are specified directly via a :MEASure? query, the measurement values are output based on the specification of this command.

Example

Command **:MEAS:ITEM:ITHD:CH1 1**

Specifies to output the instantaneous value of the total harmonic wave current distortion factor on ch1.

Query **:MEAS:ITEM:ITHD:CH1?**

Response
(When HEADER ON) **:MEASURE:NORMAL:ITEM:ITHD:CH1 1**
(When HEADER OFF) **1**

Set and Query :MEASure? Output Items (Instantaneous, Maximum, and Minimum Values for Inter-channel Voltage Fundamental Wave Phase Difference Data)

Syntax

Instantaneous value	All Channels	**:MEASure[:NORMal]:ITEM:UCHDeg:ALL <Output item>**
	ch1-2	**:MEASure[:NORMal]:ITEM:UCHDeg:CH2_1(?) <Output item>**
	ch1-3	**:MEASure[:NORMal]:ITEM:UCHDeg:CH3_1(?) <Output item>**
Maximum value	All Channels	**:MEASure[:NORMal]:ITEM:UCHDeg_MAX:ALL <Output item>**
	ch1-2	**:MEASure[:NORMal]:ITEM:UCHDeg_MAX:CH2_1(?) <Output item>**
	ch1-3	**:MEASure[:NORMal]:ITEM:UCHDeg_MAX:CH3_1(?) <Output item>**
Minimum value	All Channels	**:MEASure[:NORMal]:ITEM:UCHDeg_MIN:ALL <Output item>**
	ch1-2	**:MEASure[:NORMal]:ITEM:UCHDeg_MIN:CH2_1(?) <Output item>**
	ch1-3	**:MEASure[:NORMal]:ITEM:UCHDeg_MIN:CH3_1(?) <Output item>**

Response <Output item (NR1)>

128	64	32	16	8	4	2	1
bit7	bit6	bit5	bit4	bit3	bit2	bit1	bit0
							UCHDeg

Description

Sets the inter-channel voltage fundamental wave difference data (instantaneous value, maximum value, minimum value) output items as numerical values between 0 and 1.
Although NRf numerical values are accepted, values to the right of the decimal are dropped.
If no items are specified directly via a :MEASure? query, the measurement values are output based on the specification of this command.

Example

Command **:MEAS:ITEM:UCHD:CH2_1 1**

Specifies to output the instantaneous value of the inter-channel voltage fundamental wave difference between ch1 and ch2.

Query **:MEAS:ITEM:UCHD:CH2_1?**

Response
(When HEADER ON) **:MEASURE:NORMAL:ITEM:UCHDEG:CH2_1 1**
(When HEADER OFF) **1**

Set and Query :MEASure? Output Items (Instantaneous, Maximum, and Minimum Values for Inter-channel Current Fundamental Wave Phase Difference Data)

Syntax

Instantaneous value	All Channels	**:MEASure[:NORMal]:ITEM:ICHDeg:ALL <Output item>**
	ch1-2	**:MEASure[:NORMal]:ITEM:ICHDeg:CH2_1(?) <Output item>**
	ch1-3	**:MEASure[:NORMal]:ITEM:ICHDeg:CH3_1(?) <Output item>**
Maximum value	All Channels	**:MEASure[:NORMal]:ITEM:ICHDeg_MAX:ALL <Output item>**
	ch1-2	**:MEASure[:NORMal]:ITEM:ICHDeg_MAX:CH2_1(?) <Output item>**
	ch1-3	**:MEASure[:NORMal]:ITEM:ICHDeg_MAX:CH3_1(?) <Output item>**
Minimum value	All Channels	**:MEASure[:NORMal]:ITEM:ICHDeg_MIN:ALL <Output item>**
	ch1-2	**:MEASure[:NORMal]:ITEM:ICHDeg_MIN:CH2_1(?) <Output item>**
	ch1-3	**:MEASure[:NORMal]:ITEM:UCHDeg_MIN:CH3_1(?) <Output item>**

Response <Output item (NR1)>

128	64	32	16	8	4	2	1
bit7	bit6	bit5	bit4	bit3	bit2	bit1	bit0
							ICHDeg

Description

Sets the inter-channel current fundamental wave difference data (instantaneous value, maximum value, minimum value) output items as numerical values between 0 and 1.
Although NRf numerical values are accepted, values to the right of the decimal are dropped.
If no items are specified directly via a :MEASure? query, the measurement values are output based on the specification of this command.

Example

Command **:MEAS:ITEM:ICHD:CH2_1 1**

Specifies to output the instantaneous value of the inter-channel current fundamental wave difference between ch1 and ch2.

Query **:MEAS:ITEM:ICHD:CH2_1?**

Response
(When HEADER ON) **:MEASURE:NORMAL:ITEM:ICHDEG:CH2_1 1**
(When HEADER OFF) **1**

Query Harmonic Wave Measurement Data (Normal Measurement Items)

Syntax

Query: **:MEASure:HARMonic[:VALue]?**

Response: <Output item 1><Measurement value 1>,<Output item 2><Measurement value 2>…. (Maximum of 180 items)
See the **List of Harmonic Wave Measurement Item Specifications** for details about the <Output item> field.

Description

Query: Outputs the items specified via :MEASure:HARMonic:ITEM commands.
Unlike the :MEASure? query, only the items specified via :MEASure:HARMonic:ITEM commands are output.
The measurement data is output in the order that the items are listed in the **List of Harmonic Wave Output Item Specifications**.

Example

Query: **:MEAS:HARM?**

Response:
(When HEADER ON) **Status 00000000, HU1L001 +09.803E+0;HI1L001 +12.933E+0; HP1L001 -085.72E+0**
(When HEADER OFF) **00000000;+09.803E+0;+12.933E+0;-085.72E+0**

Note

- You can use the :TRANsmit:SEParator command to change the message unit separator from a semicolon ";" to a comma ",".
- If the display is blank (such as when the range has been changed), the response message will be "no data" (±777.77E+9) until the measurement data is displayed. We recommend only using this function with a fixed range.
- If :MEASure:HARMonic? is called immediately after the instrument is powered on, the first-order effective values of HU, HI, and HP are output for ch1 through ch3 and SUM.
- The output items specified via :MEASure:HARMonic:ITEM commands will not be reset even if a system reset is performed. These items are reset only when the instrument is powered on.

:MEASure:HARMonic? Output Items and their Sequence

Harmonic Wave Measurement Items			
Status	Instantaneous value	Status	
	Total	Status_MaxMin	
Effective Value (Level)	Voltage 0-order	HU1L000 to HU3L000	HU0L000
	Voltage 0-order (maximum value)	HU1MAXL000 to HU3MAXL000	HU0MAXL000
	Voltage 0-order (minimum value)	HU1MINL000 to HU3MINL000	HU0MINL000
	Current 0-order	HI1L000 to HI3L000	HI0L000
	Current 0-order (maximum value)	HI1MAXL000 to HI3MAXL000	HI0MAXL000
	Current 0-order (minimum value)	HI1LMIN000 to HI3MINL000	HI0MINL000
	Power 0-order	HP1L000 to HP3L000	HP0L000
	Power 0-order (maximum value)	HP1MAXL000 to HP3MAXL000	HP0MAXL000
	Power 0-order (minimum value)	HP1MINL000 to HP3MINL000	HP0MINL000
Content Ratio	Voltage 0-order	HU1D000 to HU3D000	HU0D000
	Voltage 0-order (maximum value)	HU1MAXD000 to HU3MAXD000	HU0MAXD000
	Voltage 0-order (minimum value)	HU1MIND000 to HU3MIND000	HU0MIND000
	Current 0-order	HI1D000 to HI3D000	HI0D000
	Current 0-order (maximum value)	HI1MAXD000 to HI3MAXD000	HI0MAXD000
	Current 0-order (minimum value)	HI1MIND000 to HI3MIND000	HI0MIND000
	Power 0-order	HP1D000 to HP3D000	HP0D000
	Power 0-order (maximum value)	HP1MAXD000 to HP3MAXD000	HP0MAXD000
	Power 0-order (minimum value)	HP1MIND000 to HP3MIND000	HP0MIND000
Voltage Phase Difference	Voltage 0-order	HU1P000 to HU3P000	
	Voltage 0-order (maximum value)	HU1MAXP000 to HU3MAXP000	
	Voltage 0-order (minimum value)	HU1MINP000 to HU3MINP000	
Current Phase Difference	Current 0-order	HI1P000 to HI3P000	
	Current 0-order (maximum value)	HI1MAXP000 to HI3MAXP000	
	Current 0-order (minimum value)	HI1MINP000 to HI3MINP000	
Voltage Current Phase Difference	Power 0-order	HP1P000 to HP3P000	
	Power 0-order (maximum value)	HP1MAXP000 to HP3MAXP000	
	Power 0-order (minimum value)	HP1MINP000 to HP3MINP000	
...	n-order	Last three digits: n	
...	...	...	...
Effective Value (Level)	Voltage 50-order	HU1L050 to HU3L050	HU0L050
	Voltage 50-order (maximum value)	HU1MAXL050 to HU3MAXL050	HU0MAXL050
	Voltage 50-order (minimum value)	HU1MINL050 to HU3MINL050	HU0MINL050
	Current 50-order	HI1L050 to HI3L050	HI0L050
	Current 50-order (maximum value)	HI1MAXL050 to HI3MAXL050	HI0MAXL050
	Current 50-order (minimum value)	HI1LMIN050 to HI3MINL050	HI0MINL050
	Power 50-order	HP1L050 to HP3L050	HP0L050
	Power 50-order (maximum value)	HP1MAXL050 to HP3MAXL050	HP0MAXL050
	Power 50-order (minimum value)	HP1MINL050 to HP3MINL050	HP0MINL050
Content Ratio	Voltage 50-order	HU1D050 to HU3D050	HU0L050
	Voltage 50-order (maximum value)	HU1MAXD050 to HU3MAXD050	HU0MAXL050
	Voltage 50-order (minimum value)	HU1MIND050 to HU3MIND050	HU0MINL050
	Current 50-order	HI1D050 to HI3D050	HI0L050
	Current 50-order (maximum value)	HI1MAXD050 to HI3MAXD050	HI0MAXL050
	Current 50-order (minimum value)	HI1MIND050 to HI3MIND050	HI0MINL050
	Power 50-order	HP1D050 to HP3D050	HP0L050
	Power 50-order (maximum value)	HP1MAXD050 to HP3MAXD050	HP0MAXL050
	Power 50-order (minimum value)	HP1MIND050 to HP3MIND050	HP0MINL050

Voltage Phase Difference	Voltage 50-order	HU1P050 to HU3P050	
	Voltage 50-order (maximum value)	HU1MAXP050 to HU3MAXP050	
	Voltage 50-order (minimum value)	HU1MINP050 to HU3MINP050	
Current Phase Difference	Current 50-order	HI1P050 to HI3P050	
	Current 50-order (maximum value)	HI1MAXP050 to HI3MAXP050	
	Current 50-order (minimum value)	HI1MINP050 to HI3MINP050	
Voltage Current Phase Difference	Power 50-order	HP1P050 to HP3P050	
	Power 50-order (maximum value)	HP1MAXP050 to HP3MAXP050	
	Power 50-order (minimum value)	HP1MINP050 to HP3MINP050	

Perform and Query a Reset of :MEASure:HARMonic? Output Items

Syntax Command **:MEASure:HARMonic:ITEM:ALLClear**

Description Clears all outputs set for :MEASure:HARMonic? via :MEASure:HARMonic:ITEM commands.

Example Command **:MEAS:HARM:ITEM:ALLC**

Note

- This command turns all output settings OFF.
- The output settings immediately after the instrument is powered on are as follows:
  harmonic wave
  First order effective values HU, HI, and HP for channels 1 through 3 and SUM.

Set and Query:MEASure:HARMonic? Output Items

Syntax

Command

:MEASure:HARMonic:ITEM :LIST
<data1 (NR1)>,<data2 (NR1)>,<data3 (NR1)>,
<data4 (NR1)>,<data5 (NR1)>,<data6 (NR1)>

Query

:MEASure:HARMonic:ITEM:LIST?

Response

<data1>,<data2>,<data3>,<data4>,<data5>,<data6>

<data1 (NR1)> Effective Value UI

128	64	32	16	8	4	2	1
bit7	bit6	bit5	bit4	bit3	bit2	bit1	bit0
HI0	HI3	HI2	HI1	HU0	HU3	HU2	HU1

<data2 (NR1)> Effective Value P

bit7	bit6	bit5	bit4	bit3	bit2	bit1	bit0
				HP0	HP3	HP2	HP1

<data3 (NR1)> Content Ratio UI

bit7	bit6	bit5	bit4	bit3	bit2	bit1	bit0
HI0	HI3	HI2	HI1	HU0	HU3	HU2	HU1

<data4 (NR1)> Content Ratio P

bit7	bit6	bit5	bit4	bit3	bit2	bit1	bit0
				HP0	HP3	HP2	HP1

<data5 (NR1)> Phase Angle UI

bit7	bit6	bit5	bit4	bit3	bit2	bit1	bit0
	HI3	HI2	HI1		HU3	HU2	HU1

<data6 (NR1)> Phase Difference P

bit7	bit6	bit5	bit4	bit3	bit2	bit1	bit0
					HP3	HP2	HP1

Description

Sets or queries the measurement items for the :MEASure:HARMonic? query as a numerical value between 0 and 255.
Although NRf numerical values are accepted, values to the right of the decimal are dropped.

Example

Command

:MEAS:HARM:ITEM:LIST 17,1,0,0,0,0
(This enables the output of the harmonic wave voltage, current, and active power effective values on ch1.)

Query

:MEAS:HARM:ITEM:LIST?

Response

(When HEADER ON) **:MEASURE:HARMONIC:ITEM:LIST 17,1,0,0,0,0**
(When HEADER OFF) **17,1,0,0,0,0**

Note

- This command is used along with the :MEASure:HARMonic:ITEM:ORDer command to specify the harmonic wave output order.
- If you need to output the maximum and minimum values in addition to the instantaneous value for an output item, use the provided commands such as :MEASure:HARMonic:ITEM:HU_MAX to specify that.
- Harmonic wave phase angle data cannot be displayed on the instrument. This data can only be obtained through communications commands.

Set and Query:MEASure:HARMonic? Output Items (Order)

Syntax

Command **:MEASure:HARMonic:ITEM:ORDer**
<Lower Limit Order (NR1)>,<Upper Limit Order (NR1)>,<ODD/EVEN/ALL>

Query **:MEASure:HARMonic:ITEM:ORDer?**

Response <Lower Limit Order (NR1)>, <Upper Limit Order (NR1)>,<ODD/EVEN/ALL>
Lower limit order (NR1): 0 to 50
Upper limit order (NR1): 0 to 50
(the lower limit must be less than or equal to the upper limit)

ODD: Odd orders only
EVEN: Even orders only
ALL: All orders

Description

Sets or queries the measurement items(Order) for the :MEASure:HARMonic? query.
The numerical value is accepted in NRf format, but any data after the decimal point is rounded off.

Example

Command **:MEAS:HARM:ITEM:ORD 1,15,ODD**
Sets the output to an odd order between 1 and 15.

Query **:MEAS:HARM:ITEM:ORD?**

Response (When HEADER ON) **:MEASURE:HARMONIC:ORDER 1,15,ODD**
(When HEADER OFF) **1,15,ODD**

Note

・This command is used along with the :MEASure:HARMonic:ITEM:LIST or :MEASure:HARMonic:ITEM:xxx commands to specify the harmonic wave output items.

Set and Query :MEASure:HARMonic? Output Items (Measurement status data: instantaneous value, maximum value, minimum value)

Syntax

Instantaneous value **:MEASure:HARMonic:ITEM:STATus:INST(?)** **<Output item>**

Maximum/ Minimum value **:MEASure:HARMonic:ITEM:STATus:MAXmin(?)** **<Output item>**

Response <Output item (NR1)>

128	64	32	16	8	4	2	1
bit7	bit6	bit5	bit4	bit3	bit2	bit1	bit0
							STATUS

Description

Sets the measurement data status (instantaneous value, maximum value, minimum value) output items as numerical values between 0 and 1.
Although NRf numerical values are accepted, values to the right of the decimal are dropped.
INST indicates the status for the instantaneous value at the time when the data is acquired.
MAXmin indicates the total from the time the maximum and minimum values were last reset.

For information about Status data, refer to :MEASure:ITEM:STATUS (page 67) for details.

Example

Command **:MEAS:HARM:ITEM:STAT:INST 1**
Specifies to turn ON measurement status output.

Query **:MEAS:HARM:ITEM:STAT:INST?**

Response (When HEADER ON) **:MEASURE:HARMONIC:ITEM:STAT:INST 1**
(When HEADER OFF) **1**

Set and Query :MEASure:HARMonic? Output Items (Instantaneous, Maximum, and Minimum Values for the Harmonic Wave Voltage Effective Value)

Syntax

Instantaneous value	All Channels	**:MEASure:HARMonic:ITEM:U:ALL <Output item>**
	ch1	**:MEASure:HARMonic:ITEM:U:CH1(?) <Output item>**
	ch2	**:MEASure:HARMonic:ITEM:U:CH2(?) <Output item>**
	ch3	**:MEASure:HARMonic:ITEM:U:CH3(?) <Output item>**
	sum	**:MEASure:HARMonic:ITEM:U:CH0(?) <Output item>**
Maximum value	All Channels	**:MEASure:HARMonic:ITEM:U_MAX:ALL <Output item>**
	ch1	**:MEASure:HARMonic:ITEM:U_MAX:CH1(?) <Output item>**
	ch2	**:MEASure:HARMonic:ITEM:U_MAX:CH2(?) <Output item>**
	ch3	**:MEASure:HARMonic:ITEM:U_MAX:CH3(?) <Output item>**
	sum	**:MEASure:HARMonic:ITEM:U_MAX:CH0(?) <Output item>**
Minimum value	All Channels	**:MEASure:HARMonic:ITEM:U_MIN:ALL <Output item>**
	ch1	**:MEASure:HARMonic:ITEM:U_MIN:CH1(?) <Output item>**
	ch2	**:MEASure:HARMonic:ITEM:U_MIN:CH2(?) <Output item>**
	ch3	**:MEASure:HARMonic:ITEM:U_MIN:CH3(?) <Output item>**
	sum	**:MEASure:HARMonic:ITEM:U_MIN:CH0(?) <Output item>**

Response

<Output item (NR1)>

128	64	32	16	8	4	2	1
bit7	bit6	bit5	bit4	bit3	bit2	bit1	bit0
							HU

Description

Sets the harmonic wave voltage effective value data output items returned by :MEASure:HARMonic? (instantaneous value, maximum value, minimum value) as numerical values between 0 and 1.
The order output is the order specified via MEASure:HARMonic:ITEM:ORDer.
Although NRf numerical values are accepted, values to the right of the decimal are dropped.

Example

Command **:MEAS:HARM:ITEM:U:CH1 1**

Specifies to output the instantaneous value of the harmonic wave voltage effective value on ch1.

Query **:MEAS:HARM:ITEM:U:CH1?**

Response (When HEADER ON) **:MEASURE:HARMONIC:ITEM:U:CH1 1**
(When HEADER OFF) **1**

Note

・This command is used along with the :MEASure:HARMonic:ITEM:ORDer command to specify the harmonic wave output order.
・If the specification is the same as that for the :MEASure:HARMonic:ITEM:LIST command, the command issued afterwards takes precedence.

Set and Query :MEASure:HARMonic? Output Items (Instantaneous, Maximum, and Minimum Values for the Harmonic Wave Current Effective Value)

Syntax

Instantaneous value	All Channels	**:MEASure:HARMonic:ITEM:I:ALL <Output item>**
	ch1	**:MEASure:HARMonic:ITEM:I:CH1(?) <Output item>**
	ch2	**:MEASure:HARMonic:ITEM:I:CH2(?) <Output item>**
	ch3	**:MEASure:HARMonic:ITEM:I:CH3(?) <Output item>**
	sum	**:MEASure:HARMonic:ITEM:I:CH0(?) <Output item>**
Maximum value	All Channels	**:MEASure:HARMonic:ITEM:I_MAX:ALL <Output item>**
	ch1	**:MEASure:HARMonic:ITEM:I_MAX:CH1(?) <Output item>**
	ch2	**:MEASure:HARMonic:ITEM:I_MAX:CH2(?) <Output item>**
	ch3	**:MEASure:HARMonic:ITEM:I_MAX:CH3(?) <Output item>**
	sum	**:MEASure:HARMonic:ITEM:I_MAX:CH0(?) <Output item>**
Minimum value	All Channels	**:MEASure:HARMonic:ITEM:I_MIN:ALL <Output item>**
	ch1	**:MEASure:HARMonic:ITEM:I_MIN:CH1(?) <Output item>**
	ch2	**:MEASure:HARMonic:ITEM:I_MIN:CH2(?) <Output item>**
	ch3	**:MEASure:HARMonic:ITEM:I_MIN:CH3(?) <Output item>**
	sum	**:MEASure:HARMonic:ITEM:I_MIN:CH0(?) <Output item>**

Response <Output item (NR1)>

128	64	32	16	8	4	2	1
bit7	bit6	bit5	bit4	bit3	bit2	bit1	bit0
							HI

Description

Sets the harmonic wave current effective value data output items returned by :MEASure:HARMonic? (instantaneous value, maximum value, minimum value) as numerical values between 0 and 1.
The order output is the order specified via MEASure:HARMonic:ITEM:ORDer.
Although NRf numerical values are accepted, values to the right of the decimal are dropped.

Example

Command **:MEAS:HARM:ITEM:I:CH1 1**

Specifies to output the instantaneous value of the harmonic wave current effective value on ch1.

Query **:MEAS:HARM:ITEM:I:CH1?**

Response
(When HEADER ON) **:MEASURE:HARMONIC:ITEM:I:CH1 1**
(When HEADER OFF) **1**

Note

・This command is used along with the :MEASure:HARMonic:ITEM:ORDer command to specify the harmonic wave output order.
・If the specification is the same as that for the :MEASure:HARMonic:ITEM:LIST command, the command issued afterwards takes precedence.

Set and Query :MEASure:HARMonic? Output Items (Instantaneous, Maximum, and Minimum Values for the Harmonic Wave Active Power Effective Value)

Syntax

Instantaneous value	All Channels	**:MEASure:HARMonic:ITEM:P:ALL <Output item>**
	ch1	**:MEASure:HARMonic:ITEM:P:CH1(?) <Output item>**
	ch2	**:MEASure:HARMonic:ITEM:P:CH2(?) <Output item>**
	ch3	**:MEASure:HARMonic:ITEM:P:CH3(?) <Output item>**
	sum	**:MEASure:HARMonic:ITEM:P:CH0(?) <Output item>**
Maximum value	All Channels	**:MEASure:HARMonic:ITEM:P_MAX:ALL <Output item>**
	ch1	**:MEASure:HARMonic:ITEM:P_MAX:CH1(?) <Output item>**
	ch2	**:MEASure:HARMonic:ITEM:P_MAX:CH2(?) <Output item>**
	ch3	**:MEASure:HARMonic:ITEM:P_MAX:CH3(?) <Output item>**
	sum	**:MEASure:HARMonic:ITEM:P_MAX:CH0(?) <Output item>**
Minimum value	All Channels	**:MEASure:HARMonic:ITEM:P_MIN:ALL <Output item>**
	ch1	**:MEASure:HARMonic:ITEM:P_MIN:CH1(?) <Output item>**
	ch2	**:MEASure:HARMonic:ITEM:P_MIN:CH2(?) <Output item>**
	ch3	**:MEASure:HARMonic:ITEM:P_MIN:CH3(?) <Output item>**
	sum	**:MEASure:HARMonic:ITEM:P_MIN:CH0(?) <Output item>**
Response	<Output item (NR1)>	

128	64	32	16	8	4	2	1
bit7	bit6	bit5	bit4	bit3	bit2	bit1	bit0
							HP

Description

Sets the harmonic wave active power effective value data output items returned by :MEASure:HARMonic? (instantaneous value, maximum value, minimum value) as numerical values between 0 and 1.
The order output is the order specified via MEASure:HARMonic:ITEM:ORDer.
Although NRf numerical values are accepted, values to the right of the decimal are dropped.

Example

Command **:MEAS:HARM:ITEM:P:CH1 1**

Specifies to output the instantaneous value of the harmonic wave active power effective value on ch1.

Query **:MEAS:HARM:ITEM:P:CH1?**

Response (When HEADER ON) **:MEASURE:HARMONIC:ITEM:P:CH1 1**
(When HEADER OFF) **1**

Note

・This command is used along with the :MEASure:HARMonic:ITEM:ORDer command to specify the harmonic wave output order.
・If the specification is the same as that for the :MEASure:HARMonic:ITEM:LIST command, the command issued afterwards takes precedence.

Set and Query :MEASure:HARMonic? Output Items (Instantaneous, Maximum, and Minimum Values for the Harmonic Wave Voltage Content Ratio)

Syntax

Instantaneous value	All Channels	**:MEASure:HARMonic:ITEM:UCON:ALL** <Output item>
	ch1	**:MEASure:HARMonic:ITEM:UCON:CH1(?)** <Output item>
	ch2	**:MEASure:HARMonic:ITEM:UCON:CH2(?)** <Output item>
	ch3	**:MEASure:HARMonic:ITEM:UCON:CH3(?)** <Output item>
	sum	**:MEASure:HARMonic:ITEM:UCON:CH0(?)** <Output item>
Maximum value	All Channels	**:MEASure:HARMonic:ITEM:UCON_MAX:ALL** <Output item>
	ch1	**:MEASure:HARMonic:ITEM:UCON_MAX:CH1(?)** <Output item>
	ch2	**:MEASure:HARMonic:ITEM:UCON_MAX:CH2(?)** <Output item>
	ch3	**:MEASure:HARMonic:ITEM:UCON_MAX:CH3(?)** <Output item>
	sum	**:MEASure:HARMonic:ITEM:UCON_MAX:CH0(?)** <Output item>
Minimum value	All Channels	**:MEASure:HARMonic:ITEM:UCON_MIN:ALL** <Output item>
	ch1	**:MEASure:HARMonic:ITEM:UCON_MIN:CH1(?)** <Output item>
	ch2	**:MEASure:HARMonic:ITEM:UCON_MIN:CH2(?)** <Output item>
	ch3	**:MEASure:HARMonic:ITEM:UCON_MIN:CH3(?)** <Output item>
	sum	**:MEASure:HARMonic:ITEM:UCON_MIN:CH0(?)** <Output item>

Response

<Output item (NR1)>

128	64	32	16	8	4	2	1
bit7	bit6	bit5	bit4	bit3	bit2	bit1	bit0
							HUCON

Description

Sets the harmonic wave voltage content ratio data output items returned by :MEASure:HARMonic? (instantaneous value, maximum value, minimum value) as numerical values between 0 and 1.
The order output is the order specified via MEASure:HARMonic:ITEM:ORDer.
Although NRf numerical values are accepted, values to the right of the decimal are dropped.

Example

Command

:MEAS:HARM:ITEM:UCON:CH1 1

Specifies to output the instantaneous value of the harmonic wave voltage content ratio on ch1.

Query

:MEAS:HARM:ITEM:UCON:CH1?

Response

(When HEADER ON) **:MEASURE:HARMONIC:ITEM:UCON:CH1 1**

(When HEADER OFF) **1**

Note

・This command is used along with the :MEASure:HARMonic:ITEM:ORDer command to specify the harmonic wave output order.
・If the specification is the same as that for the :MEASure:HARMonic:ITEM:LIST command, the command issued afterwards takes precedence.

Set and Query :MEASure:HARMonic? Output Items (Instantaneous, Maximum, and Minimum Values for the Harmonic Wave Current Content Ratio)

Syntax

Instantaneous value	All Channels	**:MEASure:HARMonic:ITEM:ICON:ALL <Output item>**
	ch1	**:MEASure:HARMonic:ITEM:ICON:CH1(?) <Output item>**
	ch2	**:MEASure:HARMonic:ITEM:ICON:CH2(?) <Output item>**
	ch3	**:MEASure:HARMonic:ITEM:ICON:CH3(?) <Output item>**
	sum	**:MEASure:HARMonic:ITEM:ICON:CH0(?) <Output item>**
Maximum value	All Channels	**:MEASure:HARMonic:ITEM:ICON_MAX:ALL <Output item>**
	ch1	**:MEASure:HARMonic:ITEM:ICON_MAX:CH1(?) <Output item>**
	ch2	**:MEASure:HARMonic:ITEM:ICON_MAX:CH2(?) <Output item>**
	ch3	**:MEASure:HARMonic:ITEM:ICON_MAX:CH3(?) <Output item>**
	sum	**:MEASure:HARMonic:ITEM:ICON_MAX:CH0(?) <Output item>**
Minimum value	All Channels	**:MEASure:HARMonic:ITEM:ICON_MIN:ALL <Output item>**
	ch1	**:MEASure:HARMonic:ITEM:ICON_MIN:CH1(?) <Output item>**
	ch2	**:MEASure:HARMonic:ITEM:ICON_MIN:CH2(?) <Output item>**
	ch3	**:MEASure:HARMonic:ITEM:ICON_MIN:CH3(?) <Output item>**
	sum	**:MEASure:HARMonic:ITEM:ICON_MIN:CH0(?) <Output item>**

Response

<Output item (NR1)>

128	64	32	16	8	4	2	1
bit7	bit6	bit5	bit4	bit3	bit2	bit1	bit0
							HICON

Description

Sets the harmonic wave current content ratio data output items returned by :MEASure:HARMonic? (instantaneous value, maximum value, minimum value) as numerical values between 0 and 1.
The order output is the order specified via MEASure:HARMonic:ITEM:ORDer.
Although NRf numerical values are accepted, values to the right of the decimal are dropped.

Example

Command **:MEAS:HARM:ITEM:ICON:CH1 1**

Specifies to output the instantaneous value of the harmonic wave current content ratio on ch1.

Query **:MEAS:HARM:ITEM:ICON:CH1?**

Response
(When HEADER ON) **:MEASURE:HARMONIC:ITEM:ICON:CH1 1**
(When HEADER OFF) **1**

Note

- This command is used along with the :MEASure:HARMonic:ITEM:ORDer command to specify the harmonic wave output order.
- If the specification is the same as that for the :MEASure:HARMonic:ITEM:LIST command, the command issued afterwards takes precedence.

Set and Query :MEASure:HARMonic? Output Items (Instantaneous, Maximum, and Minimum Values for the Harmonic Wave Active Power Content Ratio)

Syntax

Instantaneous value	All Channels	**:MEASure:HARMonic:ITEM:PCON:ALL** <Output item>
	ch1	**:MEASure:HARMonic:ITEM:PCON:CH1(?)** <Output item>
	ch2	**:MEASure:HARMonic:ITEM:PCON:CH2(?)** <Output item>
	ch3	**:MEASure:HARMonic:ITEM:PCON:CH3(?)** <Output item>
	sum	**:MEASure:HARMonic:ITEM:PCON:CH0(?)** <Output item>
Maximum value	All Channels	**:MEASure:HARMonic:ITEM:PCON_MAX:ALL** <Output item>
	ch1	**:MEASure:HARMonic:ITEM:PCON_MAX:CH1(?)** <Output item>
	ch2	**:MEASure:HARMonic:ITEM:PCON_MAX:CH2(?)** <Output item>
	ch3	**:MEASure:HARMonic:ITEM:PCON_MAX:CH3(?)** <Output item>
	sum	**:MEASure:HARMonic:ITEM:PCON_MAX:CH0(?)** <Output item>
Minimum value	All Channels	**:MEASure:HARMonic:ITEM:PCON_MIN:ALL** <Output item>
	ch1	**:MEASure:HARMonic:ITEM:PCON_MIN:CH1(?)** <Output item>
	ch2	**:MEASure:HARMonic:ITEM:PCON_MIN:CH2(?)** <Output item>
	ch3	**:MEASure:HARMonic:ITEM:PCON_MIN:CH3(?)** <Output item>
	sum	**:MEASure:HARMonic:ITEM:PCON_MIN:CH0(?)** <Output item>

Response

<Output item (NR1)>

128	64	32	16	8	4	2	1
bit7	bit6	bit5	bit4	bit3	bit2	bit1	bit0
							HPCON

Description

Sets the harmonic wave active power content ratio data output items returned by :MEASure:HARMonic? (instantaneous value, maximum value, minimum value) as numerical values between 0 and 1.
The order output is the order specified via MEASure:HARMonic:ITEM:ORDer.
Although NRf numerical values are accepted, values to the right of the decimal are dropped.

Example

Command **:MEAS:HARM:ITEM:PCON:CH1 1**

Specifies to output the instantaneous value of the harmonic wave active power content ratio on ch1.

Query **:MEAS:HARM:ITEM:PCON:CH1?**

Response (When HEADER ON) **:MEASURE:HARMONIC:ITEM:PCON:CH1 1**

(When HEADER OFF) **1**

Note

- This command is used along with the :MEASure:HARMonic:ITEM:ORDer command to specify the harmonic wave output order.
- If the specification is the same as that for the :MEASure:HARMonic:ITEM:LIST command, the command issued afterwards takes precedence.

Set and Query :MEASure:HARMonic? Output Items (Instantaneous, Maximum, and Minimum Values for the Harmonic Wave Voltage Phase Angle)

Syntax

Instantaneous value	All Channels	**:MEASure:HARMonic:ITEM:UPHAse:ALL** <Output item>
	ch1	**:MEASure:HARMonic:ITEM:UPHAse:CH1(?)** <Output item>
	ch2	**:MEASure:HARMonic:ITEM:UPHAse:CH2(?)** <Output item>
	ch3	**:MEASure:HARMonic:ITEM:UPHAse:CH3(?)** <Output item>
Maximum value	All Channels	**:MEASure:HARMonic:ITEM:UPHAse_MAX:ALL** <Output item>
	ch1	**:MEASure:HARMonic:ITEM:UPHAse_MAX:CH1(?)** <Output item>
	ch2	**:MEASure:HARMonic:ITEM:UPHAse_MAX:CH2(?)** <Output item>
	ch3	**:MEASure:HARMonic:ITEM:UPHAse_MAX:CH3(?)** <Output item>
Minimum value	All Channels	**:MEASure:HARMonic:ITEM:UPHAse_MIN:ALL** <Output item>
	ch1	**:MEASure:HARMonic:ITEM:UPHAse_MIN:CH1(?)** <Output item>
	ch2	**:MEASure:HARMonic:ITEM:UPHAse_MIN:CH2(?)** <Output item>
	ch3	**:MEASure:HARMonic:ITEM:UPHAse_MIN:CH3(?)** <Output item>
Response	<Output item (NR1)>	

128	64	32	16	8	4	2	1
bit7	bit6	bit5	bit4	bit3	bit2	bit1	bit0
							HUPHAse

Description

Sets the harmonic wave voltage phase angle data output items returned by :MEASure:HARMonic? (instantaneous value, maximum value, minimum value) as numerical values between 0 and 1.
The order output is the order specified via MEASure:HARMonic:ITEM:ORDer.
Although NRf numerical values are accepted, values to the right of the decimal are dropped.

Example

Command **:MEAS:HARM:ITEM:UPHA:CH1 1**
Specifies to output the instantaneous value of the harmonic wave voltage phase angle on ch1.

Query **:MEAS:HARM:ITEM:UPHA:CH1?**

Response
(When HEADER ON) **:MEASURE:HARMONIC:ITEM:UPHA:CH1 1**
(When HEADER OFF) **1**

Note

- This command is used along with the :MEASure:HARMonic:ITEM:ORDer command to specify the harmonic wave output order.
- If the specification is the same as that for the :MEASure:HARMonic:ITEM:LIST command, the command issued afterwards takes precedence.
- Harmonic wave phase angle data cannot be displayed on the instrument. This data can only be obtained through communications commands.

Set and Query :MEASure:HARMonic? Output Items (Instantaneous, Maximum, and Minimum Values for the Harmonic Wave Current Phase Angle)

Syntax

Instantaneous value	All Channels	**:MEASure:HARMonic:ITEM:IPHAse:ALL** <Output item>
	ch1	**:MEASure:HARMonic:ITEM:IPHAse:CH1(?)** <Output item>
	ch2	**:MEASure:HARMonic:ITEM:IPHAse:CH2(?)** <Output item>
	ch3	**:MEASure:HARMonic:ITEM:IPHAse:CH3(?)** <Output item>
Maximum value	All Channels	**:MEASure:HARMonic:ITEM:IPHAse_MAX:ALL** <Output item>
	ch1	**:MEASure:HARMonic:ITEM:IPHAse_MAX:CH1(?)** <Output item>
	ch2	**:MEASure:HARMonic:ITEM:IPHAse_MAX:CH2(?)** <Output item>
	ch3	**:MEASure:HARMonic:ITEM:IPHAse_MAX:CH3(?)** <Output item>
Minimum value	All Channels	**:MEASure:HARMonic:ITEM:IPHAse_MIN:ALL** <Output item>
	ch1	**:MEASure:HARMonic:ITEM:IPHAse_MIN:CH1(?)** <Output item>
	ch2	**:MEASure:HARMonic:ITEM:IPHAse_MIN:CH2(?)** <Output item>
	ch3	**:MEASure:HARMonic:ITEM:IPHAse_MIN:CH3(?)** <Output item>
Response	<Output item (NR1)>	

128	64	32	16	8	4	2	1
bit7	bit6	bit5	bit4	bit3	bit2	bit1	bit0
							HIPHAse

Description

Sets the harmonic wave current phase angle data output items returned by :MEASure:HARMonic? (instantaneous value, maximum value, minimum value) as numerical values between 0 and 1.
The order output is the order specified via MEASure:HARMonic:ITEM:ORDer.
Although NRf numerical values are accepted, values to the right of the decimal are dropped.

Example

Command **:MEAS:HARM:ITEM:IPHA:CH1 1**

Specifies to output the instantaneous value of the harmonic wave current phase angle on ch1.

Query **:MEAS:HARM:ITEM:IPHA:CH1?**

Response (When HEADER ON) **:MEASURE:HARMONIC:ITEM:IPHASE:CH1 1**

(When HEADER OFF) **1**

Note

- This command is used along with the :MEASure:HARMonic:ITEM:ORDer command to specify the harmonic wave output order.
- If the specification is the same as that for the :MEASure:HARMonic:ITEM:LIST command, the command issued afterwards takes precedence.
- Harmonic wave phase angle data cannot be displayed on the instrument. This data can only be obtained through communications commands.

Set and Query :MEASure:HARMonic? Output Items (Instantaneous, Maximum, and Minimum Values for the Harmonic Wave Active Power Phase Angle)

Syntax

Instantaneous value	All Channels	**:MEASure:HARMonic:ITEM:PPHAse:ALL <Output item>**
	ch1	**:MEASure:HARMonic:ITEM:PPHAse:CH1(?) <Output item>**
	ch2	**:MEASure:HARMonic:ITEM:PPHAse:CH2(?) <Output item>**
	ch3	**:MEASure:HARMonic:ITEM:PPHAse:CH3(?) <Output item>**
Maximum value	All Channels	**:MEASure:HARMonic:ITEM:PPHAse_MAX:ALL <Output item>**
	ch1	**:MEASure:HARMonic:ITEM:PPHAse_MAX:CH1(?) <Output item>**
	ch2	**:MEASure:HARMonic:ITEM:PPHAse_MAX:CH2(?) <Output item>**
	ch3	**:MEASure:HARMonic:ITEM:PPHAse_MAX:CH3(?) <Output item>**
Minimum value	All Channels	**:MEASure:HARMonic:ITEM:PPHAse_MIN:ALL <Output item>**
	ch1	**:MEASure:HARMonic:ITEM:PPHAse_MIN:CH1(?) <Output item>**
	ch2	**:MEASure:HARMonic:ITEM:PPHAse_MIN:CH2(?) <Output item>**
	ch3	**:MEASure:HARMonic:ITEM:PPHAse_MIN:CH3(?) <Output item>**
Response	<Output item (NR1)>	

128	64	32	16	8	4	2	1
bit7	bit6	bit5	bit4	bit3	bit2	bit1	bit0
							HPCON

Description

Sets the harmonic wave active power phase angle data output items returned by :MEASure:HARMonic? (instantaneous value, maximum value, minimum value) as numerical values between 0 and 1.
The order output is the order specified via MEASure:HARMonic:ITEM:ORDer.
Although NRf numerical values are accepted, values to the right of the decimal are dropped.

Example

Command **:MEAS:HARM:ITEM:PPHA:CH1 1**
Specifies to output the instantaneous value of the harmonic wave active power phase angle on ch1.

Query **:MEAS:HARM:ITEM:PPHA:CH1?**

Response
(When HEADER ON) **:MEASURE:HARMONIC:ITEM:PPHASE:CH1 1**
(When HEADER OFF) **1**

Note

- This command is used along with the :MEASure:HARMonic:ITEM:ORDer command to specify the harmonic wave output order.
- If the specification is the same as that for the :MEASure:HARMonic:ITEM:LIST command, the command issued afterwards takes precedence.
- Harmonic wave phase angle data cannot be displayed on the instrument. This data can only be obtained through communications commands.

(11) Communications Settings

Set and Query RS-232C Settings

Syntax

Query **:RS232c?**

Response BAUD <9600BPS/38400BPS>;ANSWER <ON/OFF>

Description

BAUD <9600BPS/38400BPS>: RS232C baud rate
ANSWER<ON/OFF>: Turns execution confirmation message output ON or OFF.
Returns the RS232-C baud rate and execution confirmation message settings as string values.

Example

Query **:RS232C?**

Response (When HEADER ON) **:RS232C:BAUD 9600BPS;ANSWER OFF**
(When HEADER OFF) **9600BPS; OFF**

Note

- This command can be executed even when a system error has occurred.
- You can use the :TRANsmit:SEParator command to change the message unit separator from a semicolon ";" to a comma ",".
- This query can be used with the RS, LAN, and GP-IB interfaces.

Set and Query the RS-232C Baud Rate Setting

Syntax

Command **:RS232c:BAUD <9600BPS/38400BPS>**

Query **:RS232c:BAUD?**

Response <9600BPS/38400BPS>

Description

Sets or queries the instrument's RS-232C baud rate setting.

Example

Command **:RS232:BAUD 9600BPS**

Query **:RS232:BAUD?**

Response (When HEADER ON) **:RS232C:BAUD 9600BPS**
(When HEADER OFF) **9600BPS**

Note

This query can be used with the RS, LAN, and GP-IB interfaces.
This setting command can only be used with the LAN and GP-IB interfaces.

Set and Query the RS-232C Execution Confirmation Message Setting

Syntax

Command **:RS232c:ANSWer <ON/OFF>**

Query **:RS232c:ANSWer?**

Response <ON/OFF>

Description

Sets or queries the RS-232C execution confirmation message output setting (ON or OFF).
When set to ON, a response is also received when sending a command.
In addition, an execution confirmation message is included after the response to a query.
The execution confirmation message is a 3-digit numerical value ("nnn"). "000" is returned when an operation is executed successfully. If an error occurs, the number of the nnnth command where the error occurred will be returned instead of "000".

Example (when HEADER OFF):

Command	Response	Comments
:RS232C:ANSWER ON	000	Operation completed successfully.
:ABCDF	001	"ABCDF" is an error.
:VOLT1:RANGE?;VOLT2:RANGE?	15;15;000	Operation completed successfully.
:VOLT1:RANGE?;VOLT2:RANGE? ; ABC	15;15;003	An error occurred with the third command, "ABC".

Example

Command **:RS232:ANSW ON**

Query **:RS232:ANSW?**

Response (When HEADER ON) **:RS232C:ANSWER ON;000**
(When HEADER OFF) **ON;000**

Note

- This command and query can be executed even when a system error has occurred.
- When set to ON, operation may become unstable if the controller (the device that sends commands) does not receive an execution confirmation message response.
- This command is used to synchronize operation with the controller over RS-232C, but can also be used with the GP-IB and LAN interfaces.
- However, be sure to always receive sent execution confirmation messages.

This query and setting command can be used with the RS, LAN, and GP-IB interfaces.

Query RS-232C Communications Errors

Syntax

Query **:RS232c:ERRor?**

Response <Communications error information (NR1)>

128	64	32	16	8	4	2	1
bit7	bit6	bit5	bit4	bit3	bit2	bit1	bit0
					Over run	Framing	

Description

Returns RS-232C communications error information in NR1 format and clears that information.
The communications error information can also be reset to 0 via the *CLS command.
The response message has no header.
bit 2: Overrun error (missed data)
bit 1: Framing error (erroneous data read)

Example

Query **:RS232:ERR?**

Response **4**

Note

- This command can be executed even when a system error has occurred.
- This query can be used with the RS, LAN, and GP-IB interfaces.

Set and Query the LAN IP Address Execution Confirmation Message Setting

Syntax

Command **:IP:ADDRess** <Address 1 (NR1)>,<Address 2 (NR1)>,<Address 3 (NR1)>,<Address 4 (NR1)>

Query **:IP:ADDRess?**

Response <Address 1 (NR1)>,<Address 2 (NR1)>,<Address 3 (NR1)>,
<Address 4 (NR1)>

<Address 1 to Address 4 (NR1)> = 0 to 255

Description

Sets or queries the IP address of the instrument.

Example

Command **:IP:ADDR 192,168,1,1**

Query **:IP:ADDR?**

Response (When HEADER ON) **:IP:ADDRESS 192,168,1,1**

(When HEADER OFF) **192,168,1,1**

Note

- The LAN communications settings will be changed after the command is sent.
  All established connections before the settings were changed will be disconnected.
- This query can be used with the RS-232C, LAN, and GP-IB interfaces.
- This setting command can be used with the RS-232C and GP-IB interfaces.

Set and Query the LAN Default Gateway Address Execution Confirmation Message Setting

Syntax

Command **:IP:DEFaultgateway**
<Address 1 (NR1)>,<Address 2 (NR1)>,<Address 3 (NR1)>,<Address 4 (NR1)>

Query **:IP:DEFaultgateway?**

Response <Address 1 (NR1)>,<Address 2 (NR1)>,<Address 3 (NR1)>,
<Address 4 (NR1)>

<Address 1 to Address 4 (NR1)> = 0 to 255

Description

Sets or queries the default gateway address for the instrument.

Example

Command **:IP:DEF 192,168,1,250**

Query **:IP:DEF?**

Response (When HEADER ON) **:IP:DEFAULTGATEWAY 192,168,1,250**

(When HEADER OFF) **192,168,1,250**

Note

- The LAN communications settings will be changed after the command is sent.
  All established connections before the settings were changed will be disconnected.
- This query can be used with the RS-232C, LAN, and GP-IB interfaces.
- This setting command can be used with the RS-232C and GP-IB interfaces.

Set and Query the LAN Subnet Mask Execution Confirmation Message Setting

Syntax

Command **:IP:SUBNetmask**
<Address 1 (NR1)>,<Address 2 (NR1)>,<Address 3 (NR1)>,<Address 4 (NR1)>

Query **:IP:SUBNetmask?**

Response <Address 1 (NR1)>,<Address 2 (NR1)>,<Address 3 (NR1)>,
<Address 4 (NR1)>

<Address 1 to Address 4 (NR1)> = 0 to 255

Description

Sets or queries the subnet mask for the instrument.

Example

Command **:IP:SUBN 255,255,255,0**

Query **:IP:SUBN?**

Response (When HEADER ON) **:IP:SUBNETMASK 255,255,255,0**

(When HEADER OFF) **255,255,255,0**

Note

- The LAN communications settings will be changed after the command is sent.
  All established connections before the settings were changed will be disconnected.
- This query can be used with the RS-232C, LAN, and GP-IB interfaces.
- This setting command can be used with the RS-232C and GP-IB interfaces.

Query GP-IB Settings

Syntax
Query **:GPIB?**
Response <GP-IB address (NR1)>
<GP-IB address (NR1)> = 0 to 30

Description Returns the GP-IB address setting as a string.

Example
Query **:GPIB?**
Response (When HEADER ON) **:GPIB:ADDRESS 5**
(When HEADER OFF) **5**

Note
・This query can be used with the RS-232C, LAN, and GP-IB interfaces.
・If GP-IB is not implemented by the unit, a device error will occur.

Set and Query the GP-IB Address

Syntax
Command **:GPIB:ADDRess <GPIB address (NR1)>**
Query **:GPIB:ADDRess?**
Response <GP-IB address (NR1)>
<GP-IB address (NR1)> = 0 to 30

Description Sets or queries the GP-IB address of the instrument.

Example
Command **:GPIB:ADDR 5**
Query **:GPIB:ADDR?**
Response (When HEADER ON) **:GPIB:ADDRESS 5**
(When HEADER OFF) **5**

Note
・This query can be used with the RS-232C, LAN, and GP-IB interfaces.
・This setting command can only be used with the RS-232C and LAN interfaces.
・If GP-IB is not implemented by the unit, a device error will occur.

Set and Query Response Message Headers ON/OFF Status

Syntax
Command **:HEADer <ON/OFF>**
Query **:HEADer?**
Response <ON/OFF>
ON: A header is added to the response message.
OFF: No header is added to the response message.

Description Sets or queries the ON/OFF status of query response message headers.

Example
Command **:HEAD ON**
Query **:HEAD?**
Response (When HEADER ON) **:HEADER ON**
(When HEADER OFF) **OFF**

Change to the Local State

Syntax
Command **:LOCAL**

Description Changes the instrument from the Remote state to the Local state.
If the instrument is already in the Local state when this command is received, it will remain in that state.

Example
Command **:LOCAL**

Note
・This command and query can be executed even when a system error has occurred.

Set and Query the Message Unit Separator

Syntax

Command **:TRANsmit:SEParator <0/1>**

Query **:TRANsmit:SEParator?**

Response <0/1>

0: Semicolon ";" (default setting)

1: Comma ","

Description

Sets or queries the message unit separator used in response messages. Although NRf numerical values are accepted, values to the right of the decimal are rounded to the nearest integer.

However, if headers are turned ON the actual output will be separated by semicolons, even if the separator has been set to comma.

Example

Command	**:TRAN:SEP 0;:HEAD OFF;:MEAS? U1,I1**	**(Specify the separator to be a semicolon.)**
Response	**10.038E+0;+12.719E+0**	**(Separator is a semicolon.)**
Command	**:TRAN:SEP 1;:HEAD OFF;:MEAS? U1,I1**	**(Specify the separator to be a comma.)**
Response	**10.038E+0,+12.719E+0**	**(Separator is a comma.)**
Command	**:TRAN:SEP 0;:HEAD ON;:MEAS? U1,I1**	**(Specify the separator to be a semicolon.)**
Response	**U1 10.038E+0;I1 +12.719E+0**	**(Separator is a semicolon.)**
Command	**:TRAN:SEP 1;:HEAD ON;:MEAS? U1,I1**	**(Specify the separator to be a comma.)**
Response	**U1 10.038E+0;I1 +12.719E+0**	**(Separator is a semicolon.) (Because headers are turned ON.)**

Query **:TRAN:SEP?**

Response (When HEADER ON) **:TRANSMIT:SEPARATOR 1**

(When HEADER OFF) **1**

Note

- Always turn headers OFF (:HEAD OFF) when changing the message unit separator.
- This command and query can be executed even when a system error has occurred.

Set and Query the Message Unit Terminator

Syntax

Command **:TRANsmit:TERMinator <0/1>**

Query **:TRANsmit:TERMinator?**

Response <0/1>

Setting / I/F	RS-232c LAN	GP-IB
0	LF	LF with an EOI
1	CR+LF	LF with a CR+EOI

Description

Sets or queries the message unit terminator used in response messages. Although NRf numerical values are accepted, values to the right of the decimal are rounded to the nearest integer.

Example

Command **:TRAN:TERM 1**

Query **:TRAN:TERM?**

Response (When HEADER ON) **:TRANSMIT:TERMINATOR 1**

(When HEADER OFF) **1**

Note

- This command and query can be executed even when a system error has occurred.

(12) Status-dependent Commands (Common Commands)

○: Can be executed ×: Cannot be executed

Command \ Status	Integration Reset		Integration START		Integration STOP		System Error
	Continuous	HOLD	Continuous	HOLD	Continuous	HOLD	
*CLS	○	○	○	○	○	○	○
*ESE	○	○	○	○	○	○	○
*ESE?	○	○	○	○	○	○	○
*ESR?	○	○	○	○	○	○	○
*IDN?	○	○	○	○	○	○	○
*OPC	○	○	○	○	○	○	○
*OPC?	○	○	○	○	○	○	○
*OPT?	○	○	○	○	○	○	○
*RST	○	○	○	○	○	○	○
*SRE	○	○	○	○	○	○	○
*SRE?	○	○	○	○	○	○	○
*STB?	○	○	○	○	○	○	○
*TRG	×	○	×	○	×	○	×
*TST?	○	×	×	×	×	×	○
*WAI	○	○	○	○	○	○	×

Status Descriptions

Integration Reset : Integration calculations are stopped and the integration time and integration value are reset.
(The INTEGRATOR RUN indicator is OFF.)

Integration START : Integration calculations are being performed (the INTEGRATOR RUN indicator is ON).

Integration STOP : Integration calculations are stopped (the INTEGRATOR RUN indicator is flashing).

Continuous : The display is updated each time sampling is performed (continuous display).

HOLD : The display is currently held and/or maximum/minimum values are being held.
(The HOLD, MAX, or MIN indicator is ON.)
However, *TRG is only valid when the HOLD indicator is ON.

System Error : Err. 1 to Err. 4 is currently displayed.

(13) Status-dependent Commands (Device-specific Commands)

○: Can be executed ×: Cannot be executed

Command \ Status	Integration Reset		Integration START		Integration STOP		System Error
	Continuous	HOLD	Continuous	HOLD	Continuous	HOLD	
AOUT?	○	○	○	○	○	○	○
AOUT							
:ITEM							
:U[n]	○	○	○	○	○	○	×
:U[n]?	○	○	○	○	○	○	○
:I[n]	○	○	○	○	○	○	×
:I[n]?	○	○	○	○	○	○	○
:P[n]	○	○	○	○	○	○	×
:P[n]?	○	○	○	○	○	○	○
:DA[n]	○	○	○	○	○	○	×
:DA[n]?	○	○	○	○	○	○	○
AVERaging	○	×	×	×	×	×	×
AVERaging?	○	○	○	○	○	○	○
CURRent[n]?	○	○	○	○	○	○	○
CURRent[n]							
:AUTO	○	×	×	×	×	×	×
:AUTO?	○	○	○	○	○	○	○
:RANGe	○	×	×	×	×	×	×
:RANGe?	○	○	○	○	○	○	○
:EXTRange	○	×	×	×	×	×	×
:EXTRange?	○	○	○	○	○	○	○
:TYPe	○	×	×	×	×	×	×
:TYPe?	○	○	○	○	○	○	○
DATAout:ITEM	○	○	○	○	○	○	○
DATAout:ITEM?	○	○	○	○	○	○	○
DEMAg	○	×	×	×	○	×	×
DEMAg?	○	○	○	○	○	○	○
DISPlay?	○	○	○	○	○	○	○
DISPlay							
:HARMonic							
:[B,C,D]:ITEM	○	○	○	○	○	○	×
:[B,C,D]:ITEM?	○	○	○	○	○	○	○
:ORDer	○	○	○	○	○	○	×
:ORDer?	○	○	○	○	○	○	○
:HORDerSel							
:[A,B,C,D]							
:ITEM	○	○	○	○	○	○	×
:ITEM?	○	○	○	○	○	○	○
:ORDer	○	○	○	○	○	○	×
:ORDer?	○	○	○	○	○	○	○

Command \ Status	Integration Reset		Integration START		Integration STOP		System Error
	Continuous	HOLD	Continuous	HOLD	Continuous	HOLD	
:MODE							
:MODE?	○	○	○	○	○	○	×
:NORMal	○	○	○	○	○	○	×
:[A,B,C,D]	○	○	○	○	○	○	×
:[A,B,C,D]?	○	○	○	○	○	○	○
ESE0	○	○	○	○	○	○	×
ESE0?	○	○	○	○	○	○	○
ESR0?	○	○	○	○	○	○	○
ESE1	○	○	○	○	○	○	×
ESE1?	○	○	○	○	○	○	○
ESR1?	○	○	○	○	○	○	○
ESE2	○	○	○	○	○	○	×
ESE2?	○	○	○	○	○	○	○
ESR2?	○	○	○	○	○	○	○
ESE3	○	○	○	○	○	○	×
ESE3?	○	○	○	○	○	○	○
ESR3?	○	○	○	○	○	○	○
FREQuency[n]?	○	○	○	○	○	○	○
FREQuency[n]							
:RANGe	○	×	×	×	×	×	×
:RANGe?	○	○	○	○	○	○	○
GPIB?	○	○	○	○	○	○	○
GPIB							
:ADDRess	○	○	○	○	○	○	×
:ADDRess?	○	○	○	○	○	○	○
HARMonic:ORDer:UPPER	○	×	×	×	×	×	×
HARMonic:ORDer:UPPER?	○	○	○	○	○	○	○
HEADer	○	○	○	○	○	○	○
HEADer?	○	○	○	○	○	○	○
HOLD	○	○	○	○	○	○	×
HOLD?	○	○	○	○	○	○	○
INTEGrate?	○	○	○	○	○	○	○
INTEGrate							
:STATe (*)							
START	○	○	×	×	○	○	×
STOP	×	×	○	○	×	×	×
RESET	○	○	×	×	○	○	×
:STATe?	○	○	○	○	○	○	○
:TIME	○	×	×	×	×	×	×
:TIME?	○	○	○	○	○	○	○
(*See also: Detailed Command Specifications)							

Command \ Status	Integration Reset		Integration START		Integration STOP		System Error
	Continuous	HOLD	Continuous	HOLD	Continuous	HOLD	
IP							
:ADDRess	○	○	○	○	○	○	×
:ADDRess?	○	○	○	○	○	○	○
:DEFaultgateway	○	○	○	○	○	○	×
:DEFaultgateway?	○	○	○	○	○	○	○
:SUBNetmask	○	○	○	○	○	○	×
:SUBNetmask?	○	○	○	○	○	○	○
LOCAL	○	○	○	○	○	○	○
MEASure?	○	○	○	○	○	○	×
MEASure							
:ITEM:ALLClear	○	○	○	○	○	○	○
:NORMal							
All :ITEM commands and queries	○	○	○	○	○	○	○
:HARMonic?	○	○	○	○	○	○	×
:ITEM							
:LIST	○	○	○	○	○	○	○
:LIST?	○	○	○	○	○	○	○
:ORDer	○	○	○	○	○	○	○
:ORDer?	○	○	○	○	○	○	○
All :[U,I,P] commands and queries	○	○	○	○	○	○	○
:[UCON,ICON,PCON]	○	○	○	○	○	○	○
:[UPHAse,IPHAse,PPHAse]	○	○	○	○	○	○	○
MODE	○	×	×	×	×	×	×
MODE?	○	○	○	○	○	○	○
:RS232c?	○	○	○	○	○	○	○
:RS232c	○	○	○	○	○	○	○
ANSWer	○	○	○	○	○	○	○
ANSWer?	○	○	○	○	○	○	○
BAUD	○	○	○	○	○	○	×
BAUD?	○	○	○	○	○	○	○
ERRor?	○	○	○	○	○	○	○
SCALE[n]?	○	○	○	○	○	○	○
SCALE[n]							
:CT	○	×	×	×	×	×	×
:CT?	○	○	○	○	○	○	○
:VT	○	×	×	×	×	×	×
:VT?	○	○	○	○	○	○	○
SOURce[n]?	○	○	○	○	○	○	○
SOURce[n]	○	×	×	×	×	×	×
:TIMEOut	○	×	×	×	×	×	×
:TIMEOut?	○	○	○	○	○	○	○

Command \ Status	Integration Reset		Integration START		Integration STOP		System Error
	Continuous	HOLD	Continuous	HOLD	Continuous	HOLD	
SYNC:CONTrol	○	×	×	×	×	×	×
SYNC:CONTrol?	○	○	○	○	○	○	○
TRANsmit							
:SEParator	○	○	○	○	○	○	○
:SEParator?	○	○	○	○	○	○	○
:TERMinator	○	○	○	○	○	○	○
:TERMinator?	○	○	○	○	○	○	○
VOLTage[n]?	○	○	○	○	○	○	○
VOLTage[n]							
:AUTO	○	×	×	×	×	×	×
:AUTO?	○	○	○	○	○	○	○
:RANGe	○	×	×	×	×	×	×
:RANGe?	○	○	○	○	○	○	○
WIRing	○	×	×	×	×	×	×
WIRing?	○	○	○	○	○	○	○

Status Descriptions

Integration Reset	:	Integration calculations are stopped and the integration time and integration value are reset. (The INTEGRATOR RUN indicator is OFF.)
Integration START	:	Integration calculations are being performed (the INTEGRATOR RUN indicator is ON).
Integration STOP	:	Integration calculations are stopped (the INTEGRATOR RUN indicator is flashing).
Continuous	:	The display is updated each time sampling is performed (continuous display).
HOLD	:	The display is currently held and/or maximum/minimum values are being held. (The HOLD, MAX, or MIN indicator is ON.)
System Error	:	Err. 1 to Err. 4 is currently displayed.

4 Operation Problems (Communications)

When communications are not operating properly, check the following causes and try the listed solutions.

∗ Problems and solutions with no specific interface icon (RS-232C/GP-IB/LAN) can be applied for all interfaces.

Problem	Cause / Solution
The RS-232C/LAN/GP-IB interface does not work at all.	・Are all cables properly connected? (See Chapter 4 in the Instruction Manual for the instrument.) ・Are all connected devices powered ON? ・Are all the cables used the correct types? (See Chapter 4 in the Instruction Manual for the instrument.) ・Do the set communications conditions (RS baud rate, etc.) on the instrument match up with the controller? RS-232C ・Are the address settings on the instrument the same as the controller's destination address? GP-IB ・Does the instrument have the same IP address setting as another device? GP-IB ・Are the communications settings (IP address, subnet mask, default gateway) all correct? LAN ・Are these IP address settings the same as those on another device? LAN ・Is the TCP/IP port number correct? LAN (Connect to TCP/IP port 3300.)
Communications are not working properly.	・Are the instrument and controller RS-232C settings (baud rate, data length, parity, stop bit) the same? RS-232C The data length (8 bits), parity (none), and stop bit (1) are fixed values. ・Is the controller's message terminator (delimiter) setting the same as the instrument setting?
After communications, the keys on the instrument no longer work.	・Press the SHIFT/EXIT/LOCAL keys on the instrument panel to take the instrument out of the Remote state. Or, send the :LOCAL command. ・Are you sending the LLO (Local Lock Out) command (see page 12) to the instrument? GP-IB
The program stops running when I try to read data with an INPUT statement. RS-232C	・You must send a query before the INPUT statement. ・Did an error occur in the query sent before the INPUT statement?
The GP-IB bus stops when I try to read data with an INPUT@(ENTER) statement. GP-IB	・You must send a query before the INPUT@(ENTER) statement. ・Did an error occur in the query sent before the INPUT statement?

I sent a command but nothing happens.	・Use the *ESR? query to check the Standard Event Status Register for items that have caused an error. (See page 36.) ・Use the RS232c:ERRor? query to check for any RS-232C communications errors. (See page 104.) RS-232C ・Set RS232c:ANSWer to ON to enable execution confirmation. (See page 104.)
I sent multiple queries but received no responses back.	・Did an error occur? ・Be sure to check for and read the response after each query is sent. To read all query responses at once, use the message separator and put all the queries on a single line. (See page 3.) Are you using the *IDN? query? ・ Query commands after an *IDN? query are not executed.
The query response message is not the same as what is displayed on the instrument panel.	・Response messages are generated when the query is received by the instrument. Therefore, in some cases the message may not match what is displayed on the panel when the response is read by the controller.
Sometimes service requests are not executed. GP-IB	・Are the Service Request Enable and Event Status Enable registers set correctly? (See page 36.) ・Clear all the event registers with the *CLS command at the end of your SRQ processing subroutine. If the event bits are not cleared, the service requests will not be executed in the same event. (See page 36.)
I cannot obtain the averaged data.	・If any measurement-related settings such as the wiring, voltage range, current range, number of times to perform averaging, VT ratio, CT ratio, etc. are changed, averaging is restarted. To obtain the average values, wait until the first averaging process finishes or monitor the AVG flag in ESR0? as shown below. 1. After changing these settings, wait until the first set of data is displayed and clear the event flags. (Example: Changing the current range to 1A) :CURR:RANG 1;*WAI;*CLS 2. Monitor the AVG flag to see when it changes to 1. Read Event Status Register 0 with an :ESR0? query. Repeat until the AVG flag (bit 3) changes to 1. 3. Read the data once the AVG flag changes to 1. :MEAS?

5 Device Documentation Requirements GP-IB

Information Related to Standard Execution Methods Based on IEEE488.2

(1) IEEE488.1 Interface Functions
See Chapter 4.4 "GP-IB Interface Settings and Connection" in the Instruction Manual for the instrument.

(2) Operation When the Address Is Set to a Value Outside the Range of 0 to 30
Settings outside the range of 0 to 30 are not allowed.

(3) Recognizing When a User Changes the Initial Address Setting
The new address is recognized at the moment when the user changes the address.

(4) Device Settings When the Instrument is Powered On
All status information is cleared. Other data is backed up.
However, header and response message terminator settings are reset.

(5) Message Exchange Option Notation

- Input Buffer Capacity and Operation

See: Input Buffer (page 5)

- Queries that Return Multiple Response Message Units

:VOLTage?,:VOLTage1?,:VOLTage2?,:VOLTage3? · · · · · · · · · · · · · · · · · · · (page 44)
:CURRent?,:CURREnt1?,:CURRent2?,:CURRent3? · · · · · · · · · · · · · · · · · · (page 47)
:FREQuency?,:FREQuency1?,:FREQuency2?,:FREQuency3? · · · · · · · · · · · · · (page 49)
:SCALE?,:SCALE1?,:SCALE2?,:SCALE3? · (page .51)
:INTEGrate? · (page 42)
:MEASure? · (page 60)
:MEASure:ITEM? · (page 65)
:MEASure:HARMonic? · (page 89)
:RS232c? · (page 103)

- Queries that Generate a Response When Checking Syntax

All queries generate a response when checking syntax.

- Queries that Generate a Response When Read

There are no queries that generate a response when read by the controller.

- Coupled Commands

There are no such coupled commands.

(6) List of Functional Requirements for Device-specific Commands and Compound Command Program Header Specifications

- Program messages
- Program message terminators
- Program message units
- Program message unit separators
- Command message units
- Query message units
- Command program headers
- Query program headers
- Program data
- Character program data
- Binary numerical value program data
- Compound command program headers

(7) Block Data Buffer Capacity Limits
Block data is not used.

(8) List of Program Data Elements Used in <Expressions> and the Maximum Number of Nested Levels Allowed in Sub-expressions (Including Syntax Restrictions Imposed by the Device on <Expressions>)

Sub-expressions are not used. The program data elements used in expressions are character program data and binary numerical value program data.
(Excluding *IDN?)

(9) Query Response Syntax

See: Message Reference(page 33)

(10) Message Transmission Interference Between Devices that Do Not Conform to the Defined Response Message Rules

Messages cannot be sent between devices.

(11) Block Data Response Capacity

There are no block data responses.

(12) List of Common Commands and Queries Used

See: Message List(page 15)

(13) Device Status After a Revised Query Completes Successfully

The *CAL? command is not used.

(14) "*DDT" Command

The *DDT? command is not used.

(15) Macro Commands

Macros are not used.

(16) Identification-related Queries and "*IDN?" Query Responses

See: Standard Commands(page 34)

(17) Capacity of the User Data Storage Area Protected When the "*PUD" Command or "*PUD" Query Is Executed

The *PUD? command and *PUD query are not used.
There also is no user data storage area.

(18) Resources When the "RDT" Command or "*RDT?" Query Is Used

The *RDT? command and *RDT query are not used.
There also is no user data storage area.

(19) Situations When the "*RST", "*LRN?", "*RCL", and "*SAV" Commands Are Affected

The *LRN?, *RCL, and *SAV commands are not used.
The *RST command resets the instrument back to its initial state.

See: Standard Commands (page 34) and Initialization Items (page 13)

(20) Range of Self-testing Performed by the "*TST?" Query

See: Standard Commands(page 34)

(21) Additional Status Data Structures Used for Reporting the Device Status

See: Event Registers (page 8)

(22) Are Commands Overwrap or Sequential Commands

All commands are sequential.

(23) Standards for Functions Required When Operation Complete Messages Are Generated as Command Responses

Operation complete messages are generated when analysis of the command is performed.