3193
3193-10

HIOKI

Instruction Manual

POWER HiTESTER

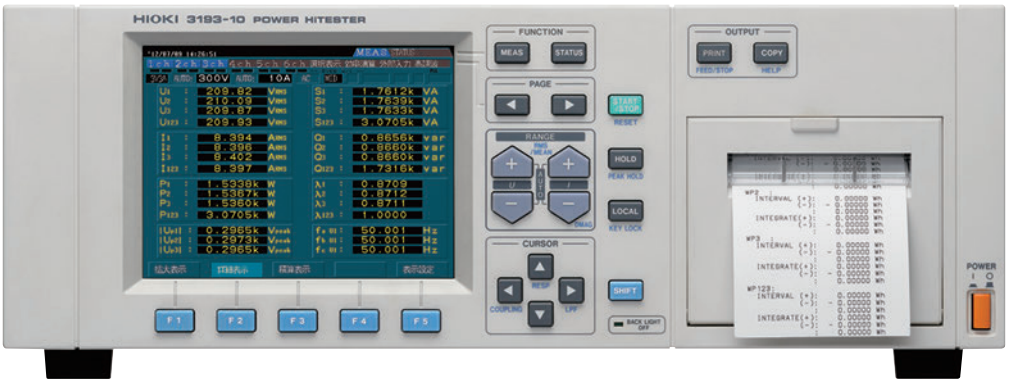

EN

Feb. 2019 Revised edition 16
3193A981-16 19-02H

60003016G

Contents

Introduction i
Inspection i
Safety Notes iii
Notes on Use vi
Chapter 1 Overview 1
1.1 Product Overview 1
1.2 Features 2

Chapter 2 Names and Functions of Parts 5
2.1 Panels and Key Operation 5
2.2 Names and Configuration of Screen 8
2.2.1 Screen Configuration 8
2.2.2 MEAS Screen (Measurement Screen) 9
2.2.3 STATUS Screen (Setting Screen) 13
2.2.4 FDD Screen 16
2.3 Indicators 17
2.4 Peak Over Indication 18

Chapter 3 Preparation for Measurement 19
3.1 Notes on Use 19
3.2 Basic Operating Procedure 22
3.3 Powering On 23
3.4 Connecting the Direct Input Unit 24
3.5 Connecting the Clamp Input Unit 26
3.6 Measurement Losses 27
3.7 Error Messages 28
3.8 System Reset 29
3.9 Operations During Power Failure 30

Chapter 4 Setting and Using the Basic Functions 33
4.1 Setting the Wiring Mode (1P2W to 3P4W) 33
4.2 Setting the Coupling Mode (DC/AC+DC/AC) 36
4.3 Switching the Voltage Range and Current Range 37
4.4 Effective Value (RMS) or Mean Rectified Value (MEAN) Selection 39
4.5 Setting the Scaling (PT/CT/SC Ratios) 40
4.6 Setting the Low-pass Filter (LPF) 42

4.7 Setting the Phase Polarity Discrimination Filter 43
4.8 Switching the Waveform Peak Value 44
4.9 Setting the Response (FAST/MID/SLOW) 45
4.10 Setting the Averaging 46
4.11 Setting on the MEAS Screen 50
4.11.1 Setting the Display Items (for 1 to 6 channels) 50
4.11.2 Setting the SELECT screen 51
4.12 Setting on the SYSTEM screen 52
4.12.1 Switching the Interface (GP-IB/RS-232C) 52
4.12.2 Setting the Display Color 53
4.12.3 Setting the Back Light 53
4.12.4 Setting the Equation for Reactive Power (Q) and Apparent Power (S) 54
4.12.5 Setting the Beep Sound 55
4.12.6 Setting Indications for Out-of-Range Inputs 55
4.12.7 Setting the Display Language (English/Japanese) 56
4.12.8 Setting the Real-time Clock 56
4.13 Degaussing 57

Chapter 5 Frequency Measurement 59
5.1 Setting the Frequency Measurement Source (fa) 60
5.2 Setting the Frequency Range(fa) 61

Chapter 6 Hold/Peak Hold Function 63
6.1 Hold Function 63
6.2 Peak Hold Function 65
6.2.1 Combination with Control Times 66

Chapter 7 Integration Function 67
7.1 Overview 67
7.2 Setting the Control Time 69
7.2.1 Setting the Interval Time 69
7.2.2 Setting the Timer 70
7.2.3 Setting the Real Time Control 71
7.3 Integration Screen 72
7.4 Starting, Stopping, and Resetting the Integration 73
7.5 Manual Integration (Controlled by Panel Keys) 74
7.6 Integration Using Time Settings (Controlled by Panel Keys) 75
7.6.1 Timer Integration 75

7.6.2 Real-Time Control Integration 76
7.6.3 Interval Integration 76
7.7 Measuring the Load Factor 77
7.8 Zero suppress function 78

Chapter 8 Efficiency Measurement 79

8.1 Overview 79
8.2 Efficiency Screen 80
8.3 Setting the Calculation Formula 81
8.4 Example Measurement 82
8.4.1 Efficiency Measurement of a Switching Power Supply (1φ2W) 82
8.4.2 Efficiency Measurement of a Switching Power Supply (3φ3W) 82
8.4.3 Efficiency Measurement of a Light Fitting (Two-Lamp) 83
8.4.4 Efficiency Measurement of an Inverter (1φ2W) 83
8.4.5 Efficiency Measurement of an Inverter (3φ3W) and Motor 84

Chapter 9 External Output/ External Control Terminals 85

9.1 Connector Pin Arrangement 86
9.2 Internal Circuit for Analog, Monitor, D/A Outputs 87
9.3 Internal Circuit for the External Control and Timing 88
9.3.1 INTEG.EXT.CONT and INTEG.RESET Terminals 88
9.3.2 FDD/PRINTER.START Terminal 89
9.3.3 EXT.A/D START Terminal 89

Chapter 10 D/A Output 91

10.1 Overview 91
10.2 Selecting Output Item 92
10.3 Output Rate 93

Chapter 11 Using the Floppy Disk Drive (Only 3193) 95

11.1 Overview 95
11.2 Operation Procedure 96
11.3 Using the Floppy Disk 97
11.4 Formatting a Floppy Disk 98
11.5 Switching the FDD/Printer 99
11.6 Setting File Names for Saved Measurement Data 100

11.7 Setting the Measurement Items for Saving 101
11.8 Saving the Data on FDD 102
11.8.1 Automatic Saving Using Time Settings 102
11.8.2 Manual Saving 103
11.8.3 Screen Hard Copy 103
11.8.4 Saving the Settings 103
11.8.5 Saving and Loading Settings 104
11.9 Information Which Can Be Saved 105
11.10 Deleting and Confirming Files 106
11.11 Format for Data Output to Floppy Disk 107
11.12 Message and Error Displays 108

Chapter 12 GP-IB and RS-232C Interface 109
12.1 Overview 109
12.2 Specifications 110
12.2.1 GP-IB Interface 110
12.2.2 RS-232C Interface 111
12.3 Interface Outline 114
12.3.1 Messages 114
12.3.2 Command Syntax 115
12.3.3 Headers 115
12.3.4 Message Terminators 116
12.3.5 Separators 116
12.3.6 Data Formats 117
12.3.7 Abbreviation of Compound Commands 118
12.3.8 Output Queue 119
12.3.9 Input Buffer 119
12.3.10 Note on Commands Initiating Events 119
12.3.11 Status Model 120
12.3.12 Status Byte Register 121
12.3.13 Event Registers 122
12.3.14 GP-IB Commands 129
12.4 Command Reference 130
12.4.1 Standard Command 131
12.4.2 Specific Commands 141
12.5 Command Summary 197
12.5.1 Standard Commands 197
12.5.2 Commands Specific to the 3193 198
12.5.3 Valid Command According to Condition (Standard Command) 204

12.5.4 Valid Command According to Condition (Specific Command) 205
12.5.5 Execution Time of GP-IB Interface Command 210
12.5.6 Initialization 211
12.5.7 Specific Command Tree 212
12.6 Sample Programs 215
12.6.1 GP-IB 215
12.6.2 RS-232C 216
12.7 Device Compliance Statement 217
12.8 Notes on Interface 219
12.8.1 GP-IB Troubleshooting 219
12.8.2 RS-232C Troubleshooting 220

Chapter 13 Using the Printer (Option) 221
13.1 Overview 221
13.2 Specifications 222
13.3 Operating Procedure 223
13.4 Loading Recording Paper 224
13.5 Switching the FDD/Printer 225
13.6 Setting the Measurement Items to Print 226
13.7 Printing Out 227
13.7.1 Manual Printing 227
13.7.2 Automatic Printing by Time Settings 227
13.7.3 Screen Hard Copy 229
13.7.4 Help Printing Mode 229
13.7.5 External Control Printing 229
13.8 Setting the Printing Direction 230
13.9 Error and Overflow Displays 231

Chapter 14 9600 AC/DC DIRECT INPUT UNIT (Option) 233
14.1 Overview 233
14.2 Notes on Use 234
14.3 Specifications (using with the 3193) 235
14.4 Internal Block Diagram 238
14.4.1 RMS Value (root-mean-square value) 238
14.4.2 MEAN Value (MEAN rectification effective value for display) 239
14.4.3 Active Power 239
14.4.4 Waveform Peak Value Measurement Circuit 240
14.4.5 Crest Factor 240

Chapter 15 9601 AC DIRECT INPUT UNIT (Option) 241
15.1 Overview 241
15.2 Notes on Use 242
15.3 Specifications (using with the 3193) 243
15.4 Internal Block Diagram 246

Chapter 16 9602 AC/DC CLAMP INPUT UNIT (Option) 247
16.1 Overview 247
16.2 Notes on Use 248
16.3 Specifications (using with the 3193) 249
16.4 Internal Block Diagram 252

Chapter 17 9603 EXTERNAL SIGNAL INPUT UNIT (Option) 253
17.1 Overview 253
17.2 Display Screen 254
17.3 Setting Method 255
17.3.1 Changing the Voltage 255
17.3.2 Setting the Scaling 256
17.3.3 Setting the Units 256
17.3.4 Setting the Pulse 257
17.3.5 Calculating Motor Power (Pm) 257
17.4 Specifications 258
17.5 Internal Block Diagram 259

Chapter 18 Maintenance and Service 261
18.1 Cautions 261
18.2 Disposing of the Unit 262

Chapter 19 Rack Mounting 263
19.1 Rack Mounting Fittings 263
19.2 Installation Procedures 265

Chapter 20 Specifications (unit only) 267
20.1 General Specifications 267
20.2 Function Specifications 270
20.3 Calculations 276
20.4 Internal Block Diagram of the 3193 281
Appendix APPENDIX 1
Index INDEX 1

Introduction

Thank you for purchasing this HIOKI "3193, 3193-10 POWER HiTESTER." To get the maximum performance from the unit, please read this manual first, and keep this at hand.

- The HIOKI 3193, 3193-10 POWER HiTESTER will be referred to as the "HIOKI 3193" in this manual.
- The HIOKI 3193 comes with a floppy disk drive (FDD) but the HIOKI 3193-10 does not. The respective specifications will be referred to when a specific product name is mentioned in this manual.
- When the FDD is mentioned in the instruction manual, even if there is no special indication, the corresponding specification will not be supported by the 3193-10.

Inspection

When the unit is delivered, check and make sure that it has not been damaged in transit. In particular, check the accessories, panel switches, and connectors. If the unit is damaged, or fails to operate according to the specifications, contact your dealer or HIOKI representative.

■ Standard accessories

Instruction Manual	1
Power cord	1
Connector	1

■ Options

9600 AC/DC DIRECT INPUT UNIT
9601 AC DIRECT INPUT UNIT
9602 AC/DC CLAMP INPUT UNIT
9603 EXTERNAL SIGNAL INPUT UNIT
9604 PRINTER UNIT
9605 HARMONIC/FLICKER MEASURMENTS UNIT

■ Shipment

If reshipping the unit, preferably use the original packing. Before shipping the 3193, always remove the floppy disk.

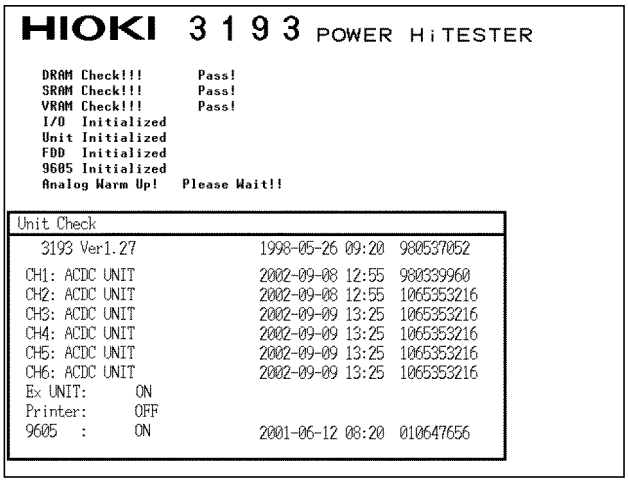

ACDC UNIT	9600 is installed.
AC UNIT	9601 is installed.
CLAMP UNIT ACDC 20 A	9602 is installed and 9277 is inserted.
CLAMP UNIT ACDC 200 A	9602 is installed and 9278 or CT6863 is inserted.
CLAMP UNIT ACDC 500 A	9602 is installed and 9279 or 9709 or CT6865 is inserted.
CLAMP UNIT ACDC 50 A	9602 is installed and CT6862 is inserted.
CLAMP UNIT 20 A AC CLAMP	9602 is installed and 9270 or 9272 (20 A) or 9272-10 (20 A) is inserted.
CLAMP UNIT 200 A AC CLAMP	9602 is installed and 9271 or 9272 (200 A) or 9272-10 (200 A) is inserted.
Ex UNIT : ON	9603 is installed.
Printer ON	9604 is installed.
9605 ON	9605 is installed.

Safety Notes

This Instruction Manual provides information and warnings essential for operating this equipment in a safe manner and for maintaining it in safe operating condition. Before using this equipment, be sure to carefully read the following safety notes.

⚠ DANGER

This instrument is designed to comply with IEC 61010 Safety Standards, and has been thoroughly tested for safety prior to shipment. However, mishandling during use could result in injury or death, as well as damage to the instrument. Be certain that you understand the instructions and precautions in the manual before use. We disclaim any responsibility for accidents or injuries not resulting directly from instrument defects.

Safety symbols

⚠	・This symbol is affixed to locations on the equipment where the operator should consult corresponding topics in this manual (which are also marked with the ⚠ symbol) before using relevant functions of the equipment. ・In the manual, this mark indicates explanations which it is particularly important that the user read before using the equipment.
∼	Indicates AC (Alternating Current).
⎓	Indicates both DC (Direct Current) and AC (Alternating Current).
⏚	Indicates a grounding terminal.
I	Indicates the ON side of the power switch.
O	Indicates the OFF side of the power switch.

The following symbols are used in this Instruction Manual to indicate the relative importance of cautions and warnings.

⚠ DANGER	Indicates that incorrect operation presents extreme danger of accident resulting in death or serious injury to the user.
⚠ WARNING	Indicates that incorrect operation presents significant danger of accident resulting in death or serious injury to the user.
⚠ CAUTION	Indicates that incorrect operation presents possibility of injury to the user or damage to the equipment.
NOTE	Denotes items of advice related to performance of the equipment or to its correct operation.

Accuracy

The specifications in this manual include figures for "measurement accuracy" when referring to digital measuring instruments, and for "measurement tolerance" when referring to analog instruments.

- **f.s.** (maximum display or scale value, or length of scale)

  Signifies the maximum display (scale) value or the length of the scale (in cases where the scale consists of unequal increments or where the maximum value cannot be defined).

  In general, this is the range value (the value written on the range selector or equivalent) currently in use.

- **rdg.** (displayed or indicated value)

  This signifies the value actually being measured, i.e., the value that is currently indicated or displayed by the measuring instrument.

- **dgt.** (resolution)

  Signifies the smallest display unit on a digital measuring instrument, i.e., the value displayed when the last digit on the digital display is "1".

Display items	Display items	FDD (header)	Printer	GP-IB/RS-232C
Voltage	U	U	U	U
Voltage peak	|Up|/Pk (enlarged display)	PEAK	PEAK (Vpeak)	Pk
Current	I	I	I	I
Current peak	|Ip|/Pk (enlarged display)	PEAK	PEAK (Apeak)	Pk
Active power	P	P	P	P
Reactive power	Q	Q	Q	Q
Apparent power	S	S	S	S
Power factor	λ	PF	PF	PF
Phase angle	ϕ	DEG	DEG	DEG
Frequency	f	f	f	f
Integration active current (+)	+Ih	PIh	Ih (+)	PIH
Integration active current (−)	−Ih	MIh	Ih (−)	MIH
Integration active current (total)	Ih	Ih	Ih	IH
Integration power (+)	+WP	PWP	WP (+)	PWP
Integration power (−)	−WP	MWP	WP (−)	MWP
Integration power (total)	WP	WP	WP	WP
Load factor	LF	LF	LF	LF
Maximum averaging power	no display	Wmax	Wmax	none
Efficiency	η	EFFI	EFFI	EFF
Channel A of 9603	chA	CHA	CHA	EXTA
Channel B of 9603	chB	CHB	CHB	EXTB
Motor power of 9603	Pm	PM	PM	PM

Measurement categories

9600, 9601 and 9602 instrument comply with CAT III (600 V or less)/ CAT II (600 to 1000 V) safety requirements.

To ensure safe operation of measurement instruments, IEC 61010 establishes safety standards for various electrical environments, categorized as CAT Ⅱ to CAT IV, and called measurement categories.

CAT Ⅱ	Primary electrical circuits in equipment connected to an AC electrical outlet by a power cord (portable tools, household appliances, etc.) CAT II covers directly measuring electrical outlet receptacles.
CAT Ⅲ	Primary electrical circuits of heavy equipment (fixed installations) connected directly to the distribution panel, and feeders from the distribution panel to outlets.
CAT Ⅳ	The circuit from the service drop to the service entrance, and to the power meter and primary overcurrent protection device (distribution panel).

Using a measurement instrument in an environment designated with a higher-numbered category than that for which the instrument is rated could result in a severe accident, and must be carefully avoided.
Use of a measurement instrument that is not CAT-rated in CAT II to CAT IV measurement applications could result in a severe accident, and must be carefully avoided.

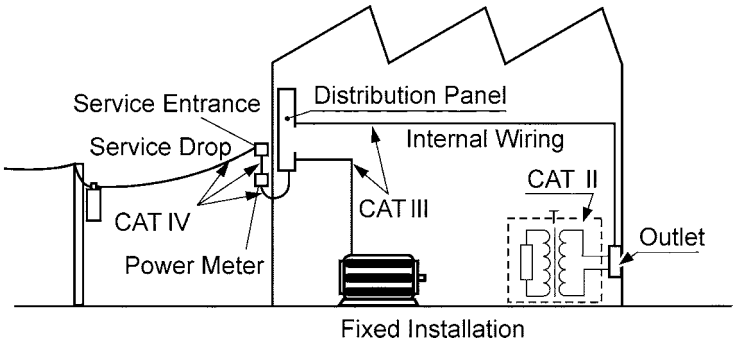

Notes on Use

In order to ensure safe operation and to obtain maximum performance from the unit, observe the cautions listed below.

⚠ DANGER

- **Always connect the powermeter input (including clamp) to the secondary side of the breaker. On the secondary side of a breaker, even if the lines are shorted the breaker can trip and prevent an accident. On the primary side, however, the current capacity may be large, and in the event of a short-circuit there may be a serious accident.**
- **The maximum input voltage and current for this unit depend on the input unit being used. Do not apply an input exceeding the maximum input voltage and current specified for the input unit. Exceeding the maximum input voltage or current could damage the unit or cause a serious accident.**

⚠ WARNING

- **Before turning on the power, make sure that the voltage of the power supply being used matches the supply voltage indicated on the rear panel of the unit. If an attempt is made to use an improper supply voltage, there is danger of damage to this unit and of life-threatening risk to the operator.**
- **The power switch has a microgap construction, and it is therefore essential to use it close to a power outlet. When the unit is not in use, and while making connections to the circuit being tested, isolate the unit electrically from the power supply, for example by removing the power cord plug from the outlet.**

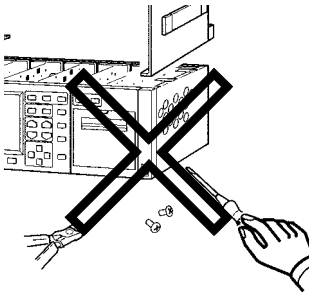

- **To avoid electrical accidents and to maintain the safety specifications of this instrument, connect the power cord provided only to a 3-contact (two-conductor + ground) outlet.**
- **Do not remove the case of the unit. There are components inside carrying high voltages or becoming hot, and this could cause an electric shock accident.**

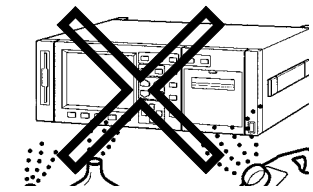

- **Do not use the unit where it may be exposed to corrosive or explosive gases. The unit may be damaged, or explosion may occur.**

⚠ CAUTION

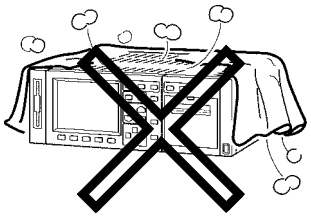

- Should the unit emit smoke, or a strange smell or strange sound, immediately stop testing operations, power the unit off, and remove the power cord from the outlet, shut off the circuit being tested, disconnect the unit, and consult your HIOKI representative. Continued use of the unit could lead to fire or electric shock accidents.

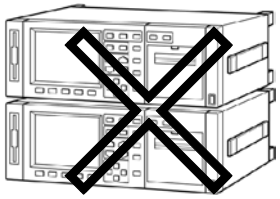

- Do not insert foreign objects through the ventilation holes in the top and bottom of the case. Particularly if metallic, liquid, or combustible substances get inside the case, this may lead to fire or electric shock, or to malfunction. When using several devices at the same time, do not stack them.
- Never allow the ventilation holes in the top and bottom covers to become blocked while using this unit. Blocking the ventilation will cause internal temperature to rise, possibly resulting in fire or damage to the equipment.

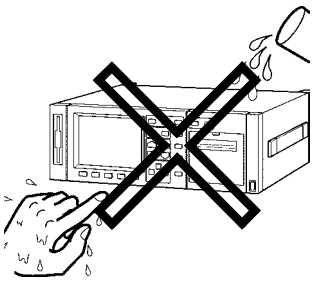

- To prevent electric shock, do not allow the unit to become wet and do not use the unit when your hands are wet.
- This unit is designed for indoor use and can be safely used at temperatures ranging from 0℃ to 40℃ and should be operated at 80% RH or less.
- This unit is not constructed to be waterproof or dustproof, so do not use it in a very dusty environment or in one where it will get wet.

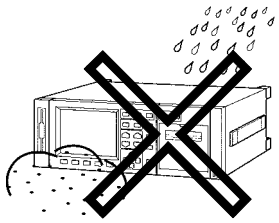

- Do not store or use the unit where it will be exposed to direct sunlight, high temperatures, high humidity, or condensation. If exposed to such conditions, the unit may be damaged, the insulation may deteriorate, and the unit may no longer satisfy its specifications.
- To avoid damage to the unit, do not subject the equipment to vibrations or shocks during transport or handling. Be especially careful to avoid dropping the equipment.

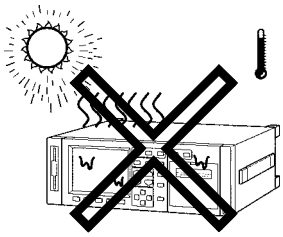

- Do not place the unit on an unstable stand, or in an uneven location. It may fall to the ground, or fall over, and either of these events may lead to malfunction or accident.
- Do not use the unit near any device which generates strong electromagnetic radiation or near a static electrical charge, as these may cause errors.

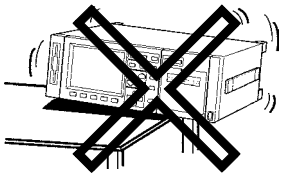

- Avoid treading on or pinching the cable so as not to damage the cable sheaths.
- When unplugging the power cord from the power receptacle or from the unit, grasp the plug, not the cord, in order to avoid damaging the cable.

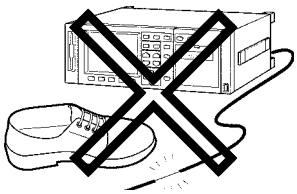

- To avoid damaging the sensor cables or probes, do not bend or pull them, especially where they connect to the sensor.

⚠ CAUTION

- Use caution when taking measurements in circuits where the power line are hot.
- Keep the cables well away from heat, to prevent the possibility of melting the insulation.
- For long-term storage, remove the power cord.

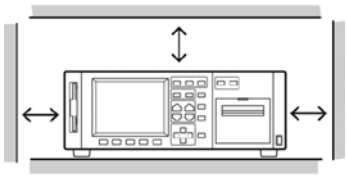

- In order to prevent temperature rising, place the device away from other things so that the vents are not blocked.
- The instrument should be operated only with the bottom or rear side downwards.
- Do not stack up the device.

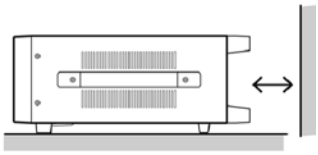

- Do not obstruct the ventilation holes. (Do not place anything on the device as it may block the ventilation holes.)

NOTE

- All options for this unit are factory-fitted, but it is also possible to add options at a later date after purchase. In this case, however, it is necessary for the unit to be returned to HIOKI headquarters.
- With the appropriate combination of direct connection input units, this unit can function as either an AC power meter or dual AC/DC power meter. When used together with clamp input units, depending on whether the clamp sensor used is for AC or DC, this unit can function as either an AC power meter or dual AC/DC power meter. When used as an AC power meter, it is not possible to measure a DC component superimposed on the AC signal (half-wave rectification, or full-wave rectification upper and lower excluded waveform).
- Note that limits are specified for the range in which voltage and current level accuracies are guaranteed.
- In order to assure accurate measurements, allow this unit to warm up for at least 1 hour before using it.
- This power meter uses the calculations indicated in the specifications in order to determine apparent power (*S*), power factor (λ), and reactive power (*Q*) on the basis of the measured voltage (*U*), current (*I*), and active power (*P*). The values displayed by this power meter may differ from those produced by other testers that are based on different principles of operation or testers that use different calculations.
- Display of a polarity symbol (-) together with reactive power (*Q*), power factor (λ) or phase angle (ϕ) occurs only when TYPE1 is selected as the calculation type, and indicates that current is delayed with respect to voltage. For reasons related to circuit design, the polarity symbol is displayed even when input is "0".
- Due to measuring error or a disproportionate load, the effective power may exceed the apparent power, resulting in a power factor of 1 or more. In such a case, this system is designed to make the apparent power equal to the effective power.
- There are two sorts of measurement: using analog calculation by the input unit or by digital calculation using the harmonic analysis/flicker measurement function, and since these have entirely different principles of measurement, frequency range, and accuracy, and as a result the final measured values may be different.
- Accurate measurement may be impossible in locations subject to strong external magnetic fields, such as transformers and high-current conductors, or in locations subject to strong external electric fields, such as radio transmission equipment.
- For the current measurement of the 9600 AC/DC DIRECT INPUT UNIT, the DC-CT (current transformer) method is used, so after measuring a large current, there may be a very slight residual offset signal. The offset signal produces the largest error effect in the minimum ranges; in this case, shut off the current input, and carry out degaussing (DMAG).
- The 9600, 9601, and 9602 active power measurement units operate with an auto-zero circuit at 2.442 kHz. For this reason, an input signal with a frequency of 2.442 kHz will result in a periodically fluctuating display indication.

NOTE

- When the input is less than a certain level of measurement range, depending on using the input unit, the display value is forced to zero. See the specifications of the input unit to be used.
- When measuring a high frequency voltage to earth (for example the secondary side of an inverter), errors may occur in the measurement values.
- To maintain the measurement accuracy of the unit, bear the following cooling measures in mind:
  Do not obstruct the ventilation holes
  Keep away from sources of heat
  If rack mounted, install a cooling fan
  Do not stack up the device.
  Do not place anything on the device.
- This unit switches the power supply voltage automatically. Voltage fluctuations of 10% from the rated supply voltage are taken into account.
- This unit has no external fuse. Thus if the unit does not operate when the power switch is turned on and power is supplied, there is a fault. Disconnect the power cord and measurement lines, and contact your dealer or HIOKI representative.
- This instruments may cause interference if used in residential areas.Such use must be avoided unless the user takes special measures to reduce electromagnetic emissions to prevent interference to the reception of radio and television broadcasts.

Chapter 1
Overview

1.1 Product Overview

The 3193 POWER HiTESTER is a power meter that can test any type of line ranging from single-phase lines to three-phase four-wire lines.

Based on the voltage, current, and active power measurements, this unit calculates and displays reactive power, apparent power, power factor, phase angle, and efficiency. It further has a wide range of measurement functions including frequency measurement function, peak measurement function, current integration, active power integration, analog outputs, monitor outputs, and harmonic analysis/flicker function (option).

1.2 Features

(1) Safe design

The 3193 POWER HiTESTER features a safe design that complies with the IEC61010-1 safety standard.

(2) Capable of measuring power on all types of power lines

This single power meter is capable of measuring power on all types of power lines, ranging from single-phase lines to three-phase four-wire lines by installing the input units.

(3) Simultaneous measurement of multiple systems

Up to six input channels can be installed, so that for example, a single unit can simultaneously measure the input power and output power of a three-phase inverter.
By combinations with the optional external input units, the input power and output power of an inverter and the output of a motor can be measured and calculated with a single unit. Further, by using the efficiency calculation function, the efficiency and overall efficiency of up to three points can be measured simultaneously with one unit.

(4) Wide current measurement range

With a direct connection input unit, and no external current transformer, it is possible to measure a maximum of 50 A rms. The internal current transformer design keeps the losses in the current measurement meter extremely low. Using a current sensor input unit, existing current sensors can be used to measure up to 500 A.

(5) High accuracy

The basic accuracy of±0.1% rdg.±0.1%f.s. is high.

(6) Wide frequency range: DC and 0.5 Hz to 1 MHz (using optional 9600 AC/DC DIRECT INPUT UNIT)

The wide frequency response supports the evaluation of inverter-motor systems, inverter fluorescent lighting systems, ultrasound motors, switching power supplies, and so on.

(7) Built-in low pass filter

The cut-off frequency can be selected from three values. This function allows an inverter fundamental frequency to be extracted, and also supports data exchange with conventional devices.

(8) Three types of calculation expression selectable

Three types of calculation for apparent power and reactive power can be selected, to support compatibility with conventional devices.

(9) Peak measurement function

It is possible to measure peak values of a voltage or current waveform.
Also, using the peak hold function, motor surge current peak values, and the peak values of effective values can be measured.

(10) Separate integration values for each polarity

For current and active power, positive, negative, and total integrated values are provided.
Each channel can be integrated separately.

(11) Three averaging functions

Time average, sliding average, or exponential average can be selected as the averaging mode.

(12) Three-channel frequency measurement function

The unit has a three-channel frequency measurement function, allowing separate frequency measurement when multiple systems are being tested.

(13) Analog signal input from an external device (using optional 9603 EXTERNAL SIGNAL INPUT UNIT)

It is possible to input a separate analog output (or pulse signal) from the system undergoing power measurement, for easy on-screen conversion.
For example, inputting the analog outputs from a torque meter or rotation counter enables the converted torque or rotation values to be shown on the screen. The power can also be computed from the torque or rotation values.

(14) Harmonic analysis/flicker measurement function (option)

The harmonic analysis function can analyze up to the 50th harmonic of the voltage, current, or active power waveform, for fundamental frequencies from 5 Hz to 440 Hz.

(15) High visibility color LCD

The color LCD screen has a wide viewing angle, and allows simultaneous display of different information without requiring screen switching, giving an at-a-glance grasp of the overall state of the measured system. In combination with the optional harmonic analysis/flicker function, it is possible to use different colors to distinguish harmonic analysis graphs and waveforms.

(16) FDD installed (only 3193)

The built-in floppy disk drive facilitates data saving when required, and automatic saving at preset times.
It is also possible to save the unit settings and reload them to restore the previous state. Upgrades of the unit are also supported.
(No FDD in the HIOKI 3193-10)

(17) Eight-channel D/A output fitted as standard

These output specified items, with an output of ±5 V corresponding to the full scale range.

(18) Efficiency calculation function fitted as standard

This provides three efficiency calculations from measured power values.

(19) Rapid response analog outputs fitted as standard

These outputs provide 5 V full-scale analogs of the voltage, current, and active power ranges. (Excluding 1000 V range)
When the response is set to FAST, these have a 100 ms response time.

(20) Waveform outputs fitted as standard

These outputs provide 1 V full-scale waveform outputs corresponding to the voltage and current ranges, allowing waveform monitoring with a recorder or oscilloscope.

(21) Built-in printer (option)

This provides a printout of the measurement data and screen displays.

(22) Choice of display language

The display language can be selected as English or Japanese.

(23) GP-IB/RS-232C fitted as standard

2

Chapter 2
Names and Functions of Parts

2.1 Panels and Key Operation

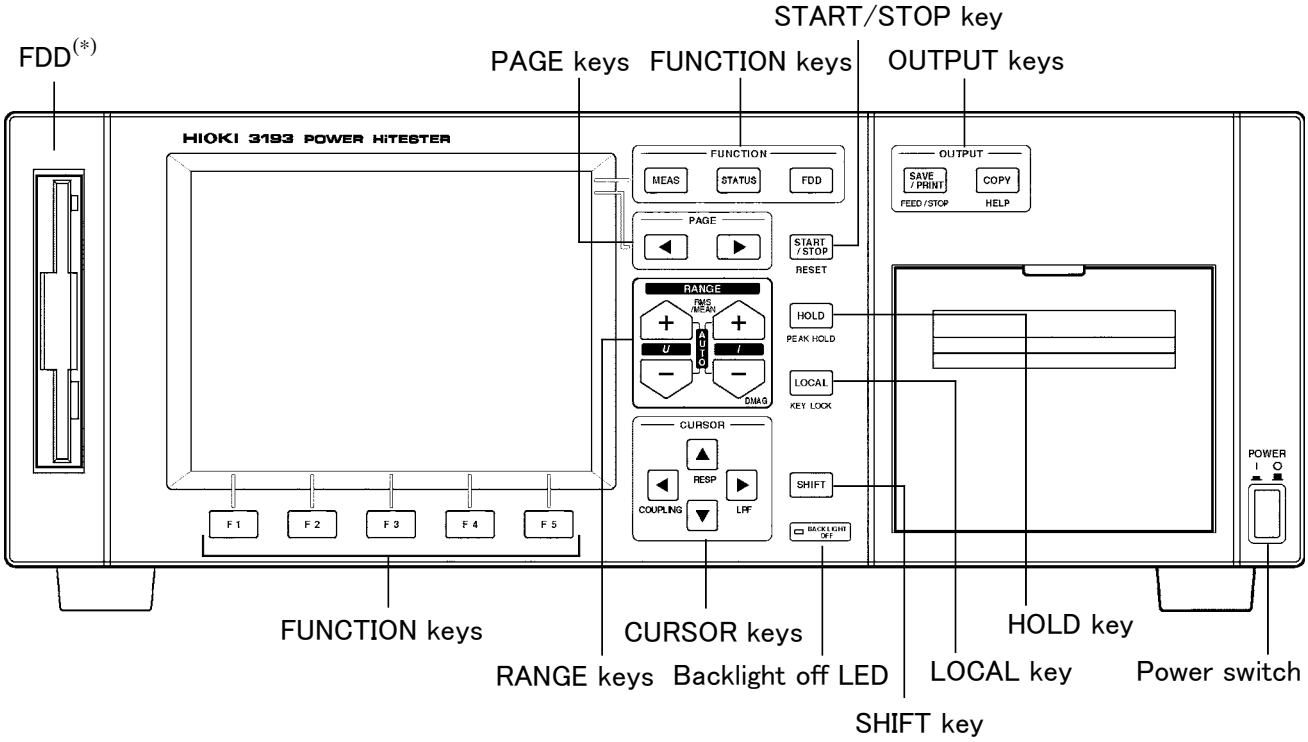

Front Panel

FUNCTION	MEAS	Changes to the measurement value display screen
	STATUS	Changes to the settings display screen
	FDD(*)	Used for setting the file name of the floppy disk, and saving and recalling unit settings.
PAGE	◀ ▶	In the MEAS and STATUS screens, used to switch display for the item in the second row from the top.
RANGE	*U* + / U −	Changes the voltage range on the displayed channel. Pressing both keys sets to the auto ranging.
	SHIFT→*U* +	Pressing the SHIFT key and then pressing the *U* + key toggles the voltage for the displayed channel between RMS and MEAN.
	I + / *I* −	Changes the current range on the displayed channel. Pressing both keys sets to the auto ranging.
	SHIFT→*I* +	Pressing the SHIFT key and then pressing the *I* + key toggles the current for the displayed channel between RMS and MEAN.
	SHIFT→*I* −	Pressing the SHIFT key and then pressing the *I* − key executes degaussing. This effects only when using the 9600 input unit, or when using the 9602 in combination with AC/DC clamp.
OUTPUT	OUTPUT	Outputs the display screen to the FDD(*) or printer.
	COPY	Sends a copy of the screen to the FDD(*) or printer.
	SHIFT→COPY	Prints the current settings of the unit on the FDD(*) or printer.
	SAVE/PRINT(*)	Outputs the specified items to the FDD(*) or printer.
	SHIFT→ SAVE/PRINT(*)	Feeds the printer paper. During printing, pressing this key ends the printing.
CURSOR	◀ ▶▲▼	Used to move the cursor for settings and so on.
	SHIFT→◀	Changes the connection mode on the measurement screen for each channel.
	SHIFT→▲	Changes the response mode on the measurement screen for each channel.
	SHIFT→▶	Changes the low-pass filter on the measurement screen for each channel.
HOLD	HOLD	Stops display updating of all measurement values, then each subsequent press updates the display.
	SHIFT→HOLD	When not in the hold mode, this switches to the peak hold mode. Press SHIFT and HOLD again to release this setting. In this mode, pressing the HOLD key resets and then it is in the peak value hold mode.
LOCAL	LOCAL	Used to end remote control.
	SHIFT→LOCAL	Locks the panel keys. Press SHIFT and LOCAL again to release this setting.
START/ STOP	START/STOP	Starts and stops each time controls (integration, time averaging, automatic output to FD/printer).
	SHIFT→ START/STOP	After stopping the integraion, this key combination resets the elapsed time and integration values.
F1 to F5	Used to select setting items.	
POWER	Powers the unit on and off.	

(*: There is no FDD or FDD key in the HIOKI 3193-10. SAVE/PRINT key is the PRINT key.)

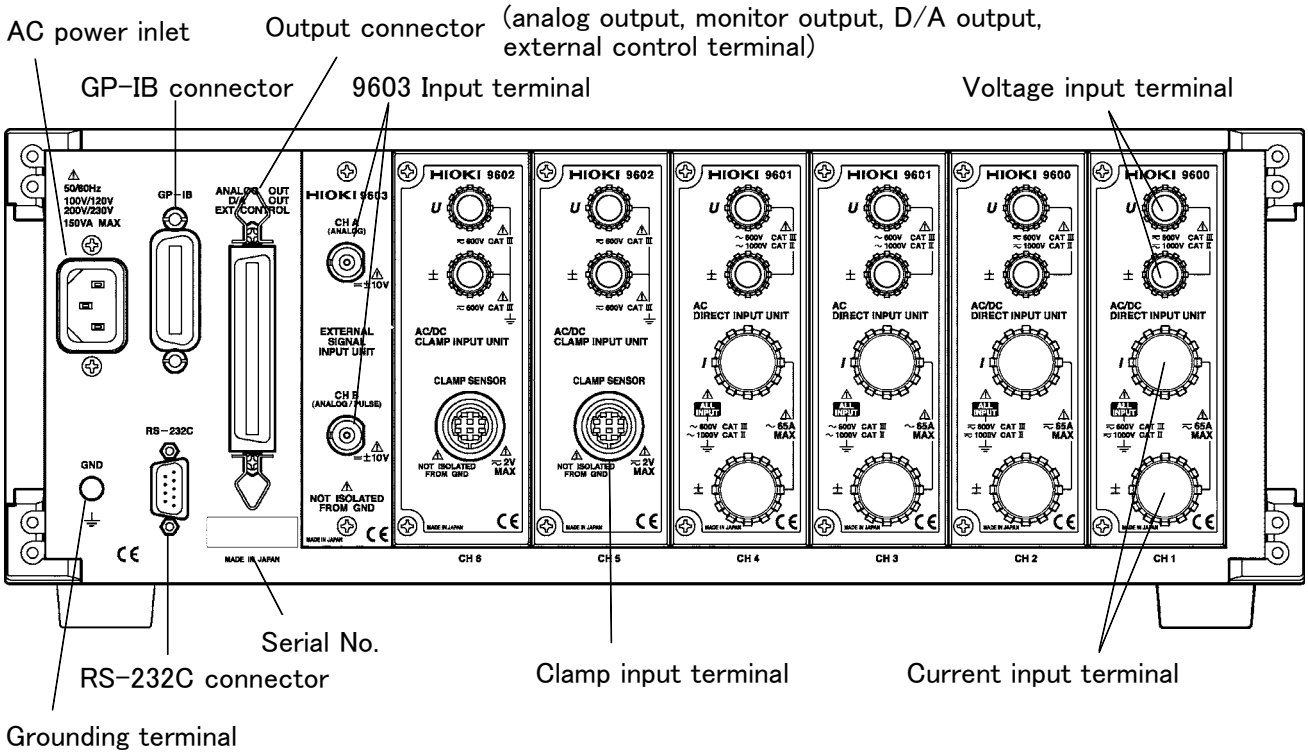
AC power inlet
Output connector
(analog output, monitor output, D/A output, external control terminal)
GP-IB connector
9603 Input terminal
Voltage input terminal
Serial No.
RS-232C connector
Clamp input terminal
Current input terminal
Grounding terminal

Rear Panel

2.2 Names and Configuration of Screen

2.2.1 Screen Configuration

The three basic screens are the MEAS (measurement) screen, the STATUS screen, and the FDD (floppy disk drive) screen(*). Pressing the **MEAS**, **STATUS**, or **FDD** key(*) on the panel switches to the corresponding screen. This configuration is when all options are installed.

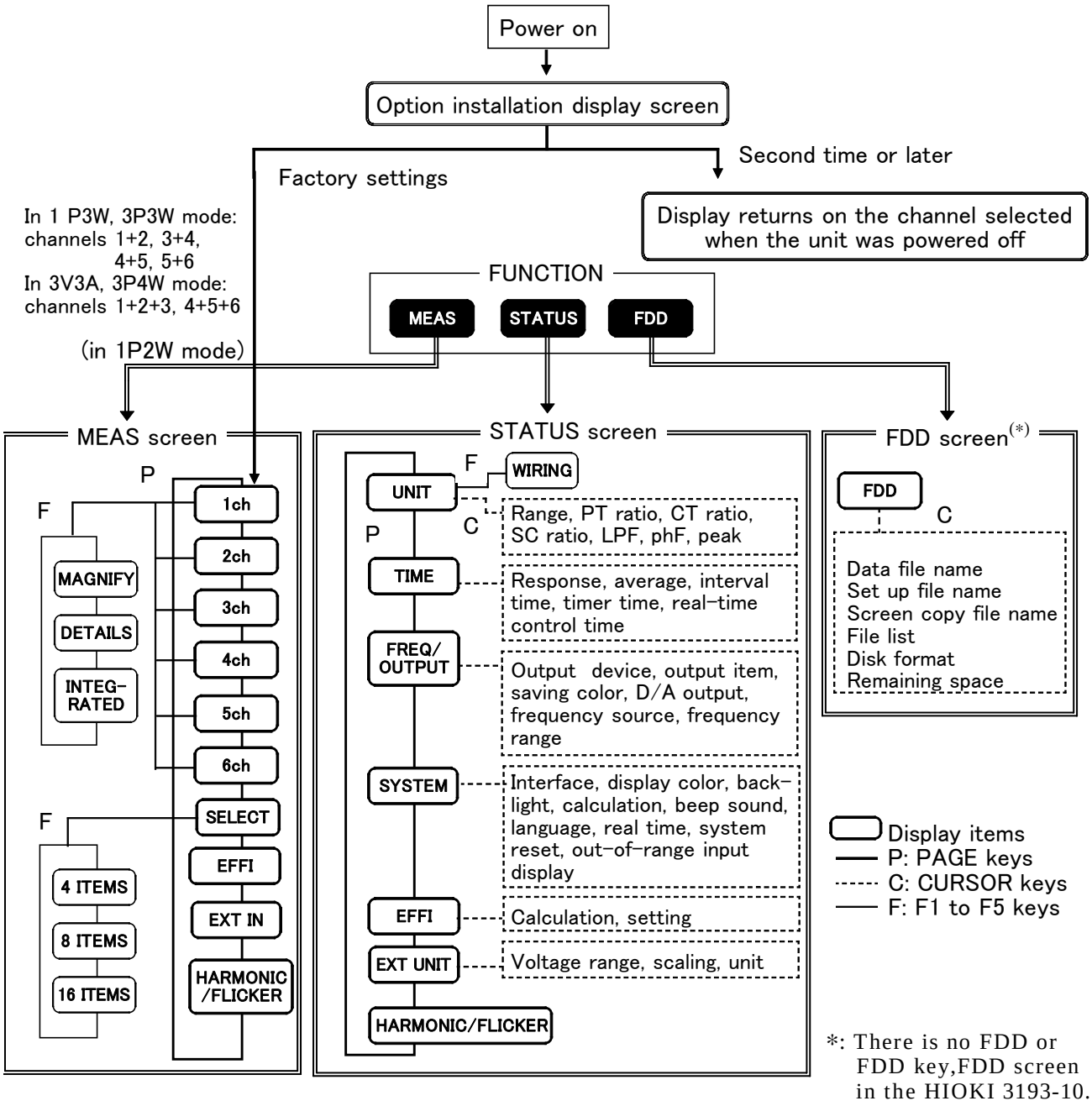

Screen paths when all options are installed.

NOTE When the unit is first powered on after purchase, and after a system reset, the display for channel 1 appears. Thereafter, the display returns on the channel selected when the unit was powered off.

2.2.2 MEAS Screen (Measurement Screen)

This screen displays measurement results. The displays available depend on the options installed.
Switch from one display to another using the **PAGE** key on the front panel. In this case the second row of cursor positions from the top of the screen shows the currently displayed page. Each item in this row is blank if the corresponding option is not installed. The third row on the screen shows the settings for the currently displayed channel.

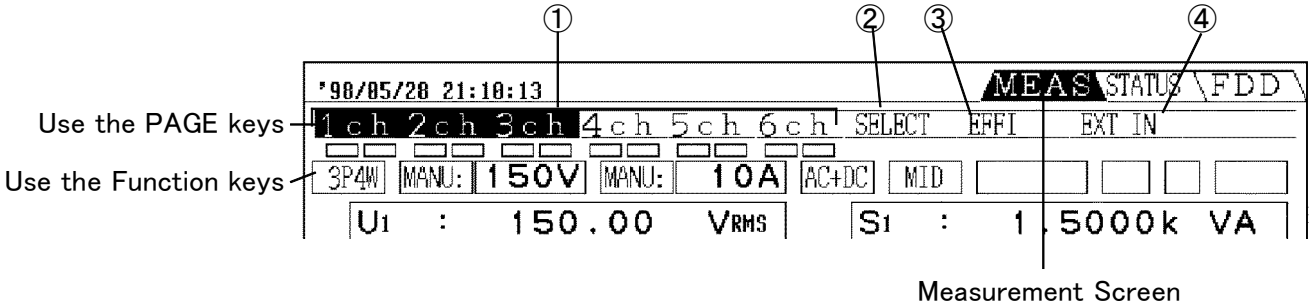

① Screen for each channel (channels 1 to 6) [**1ch** to **6ch**]

- This is the screen when the cursor position is on 1ch (channel 1) to 6ch (channel 6). This corresponds to the installation of the 9600, 9601, and 9602 options.
- For multi-channel combinations, of single-phase three-wire (1P3W) and above, the measurement values are displayed combined on a single screen. In this case, the cursor also appears on the corresponding channel numbers together.

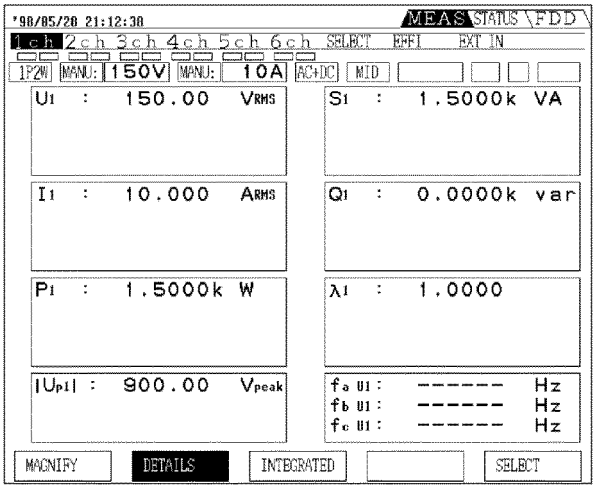

In 1P2W mode

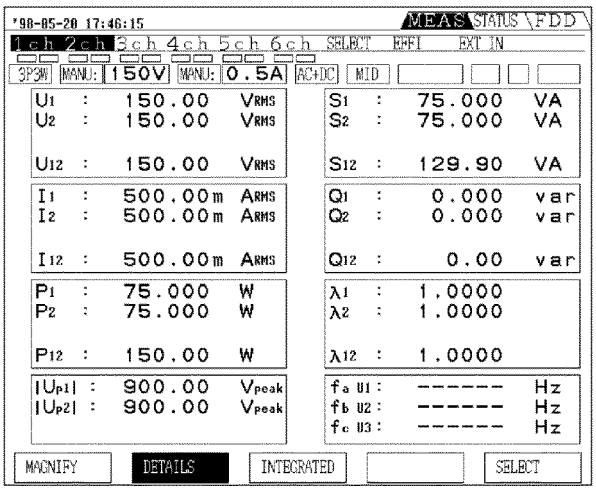

In 1P3W, 3P3W mode

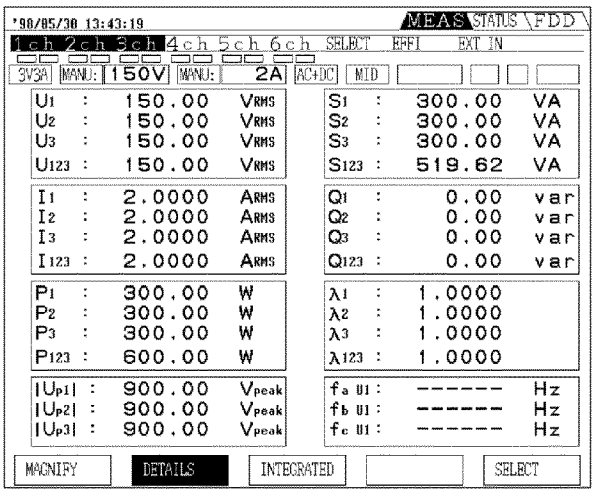

3V3A/3P4W mode

NOTE

- The subscript numbers on symbols indicate channels. For example, "U_1" indicates that the voltage measured on input unit channel 1 is displayed. The indication "U_{123}" indicates that the SUM value of the voltages measured on input unit channels 1, 2 and 3 is displayed.
- When the SUM value of the active power in 3V3A mode is shown as, for example, "P_{123}", then "P_1+P_2" is calculated, and "P_3" is ignored.
- In 1P2W mode, when DC mode is selected, the reactive power (*Q*), power factor (λ), phase angle (ϕ) for each channel are displayed, but they are meaningless. In 3P3W or 3V3A mode, when three-phase three-wire is measured, active power (*P*), apparent power (*S*), reactive power (*Q*), power factor (λ), phase angle (ϕ) for each channel are displayed, but they are also meaningless. Make a setting for display to off not to display them.
  See Section 20.3, "Calculations."

- Other display screens include enlarged and integration value displays; function keys F1 and F3 switch to these displays.

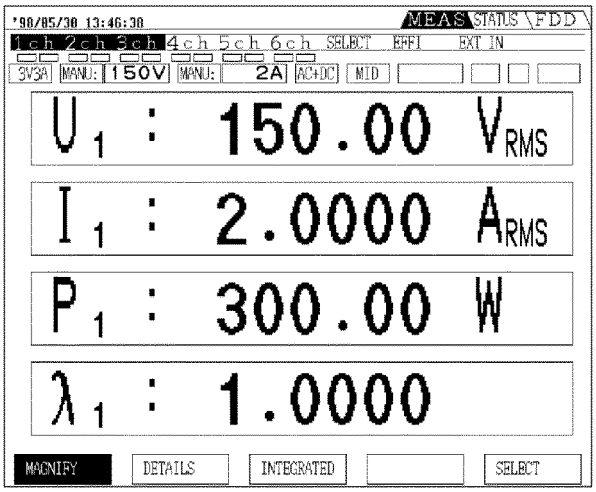

Enlarged display screen

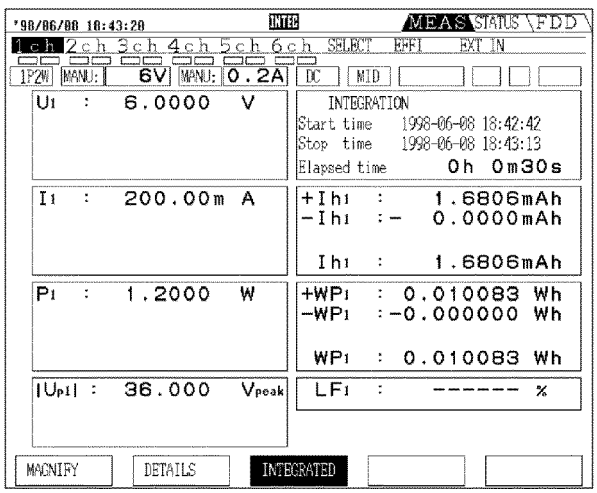

Integration display screen
1 P2W, DC mode

② Selection screen [**SELECT**]

- Required items (except harmonics, flicker, and integration values) can be selected from all of the measurements being made and displayed.
- The screen format can be selected to show 4, 8, or 16 items.

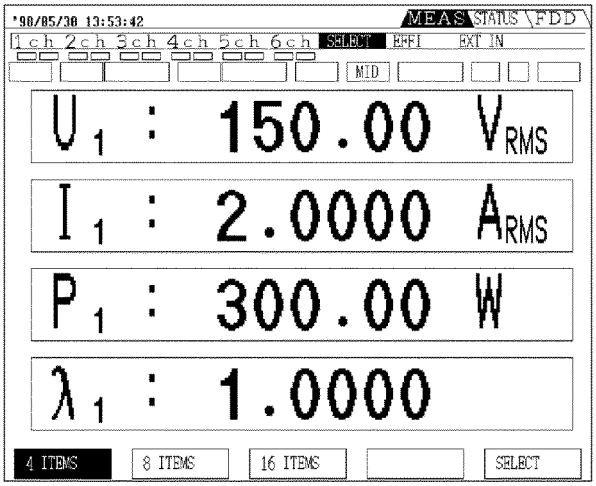

4 items display screen

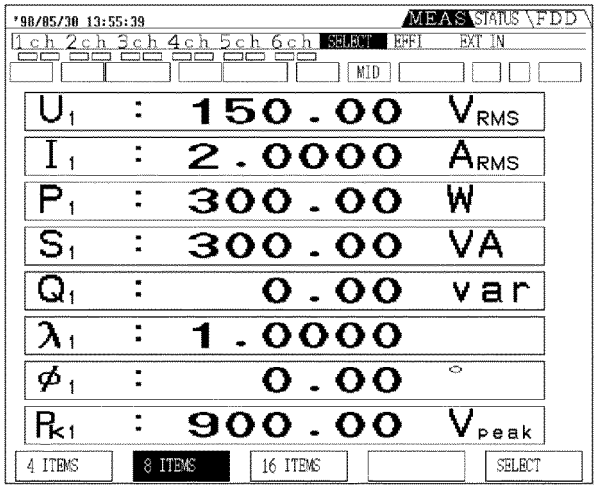

8 items display screen

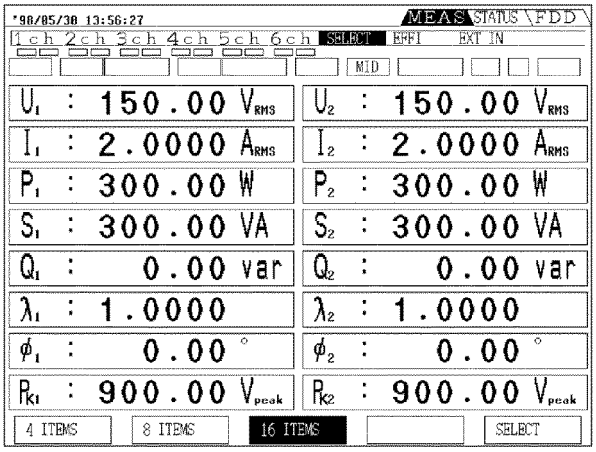

16 items display screen

③ Efficiency screen [**EFFI**]

By combining measurement values (active power, motor power), this calculates and displays the efficiency.

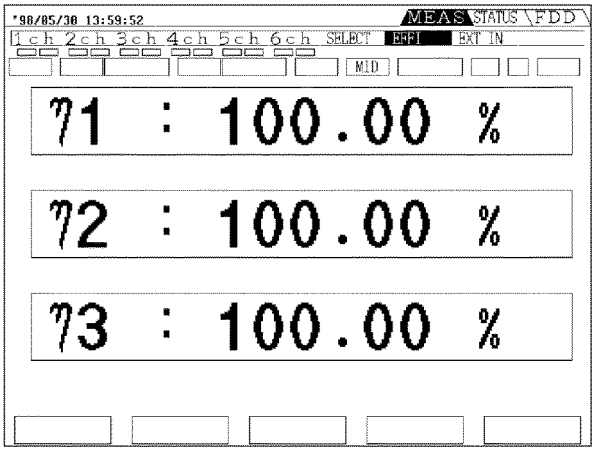

④ External input screen [**EXT IN**]

This is displayed when the optional 9603 EXTERNAL SIGNAL INPUT UNIT is installed. The motor power (*P*m) is displayed only when the unit settings for channel A is torque, for channel B is number of rotating (rpm).

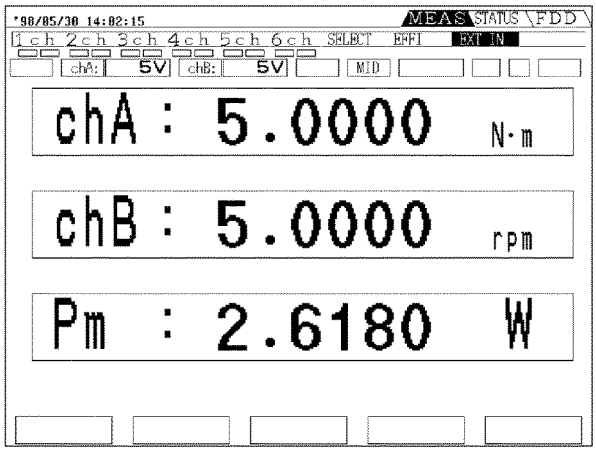

⑤ Harmonic waveform screen

This is displayed when the optional 9605 HARMONIC/FLICKER MEASUREMENTS UNIT is installed. (See 9605 Instruction Manual)

2.2.3 STATUS Screen (Setting Screen)

This screen provides various settings. The screens correspond to the installed options. Switch from one display to another using the **PAGE** key on the front panel. In this case the second row of cursor positions from the top of the screen shows the currently displayed page.
From this row, you can also check which options are installed.

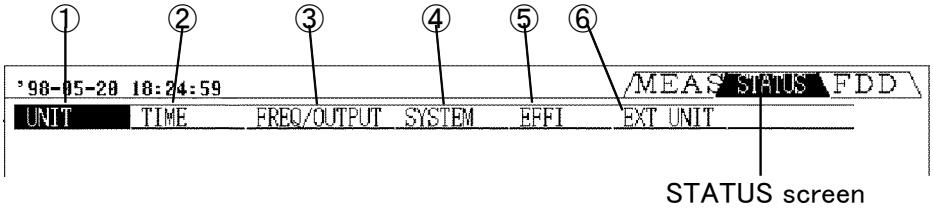

① Unit screen [**UNIT**]

- This shows a list of the settings for each channel. In this case too, the settings are collected together according to the channel combinations depending on the connection mode.
- Moving the cursor to an item with the **CURSOR** keys allows that item to be set or changed.

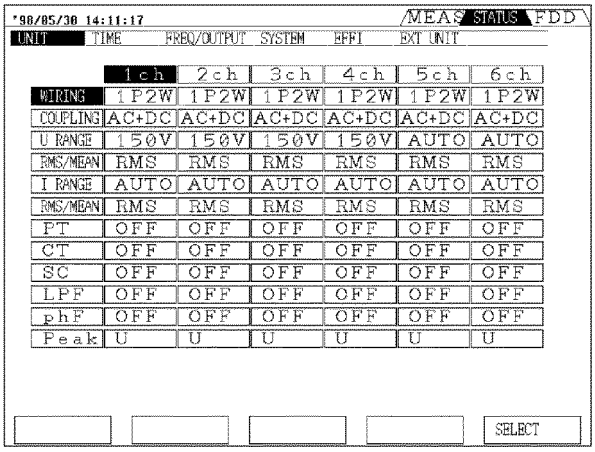

1P2W 6 types

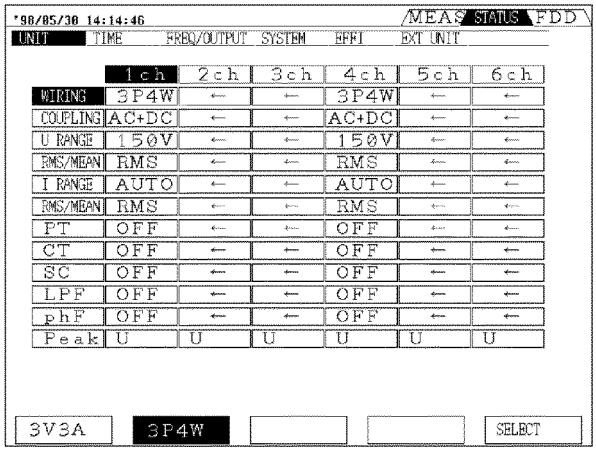

3P4W 2 types

② Time control screen [**TIME**]

This shows the settings for the response, averaging function, the interval time, timer time, and real-time control time.

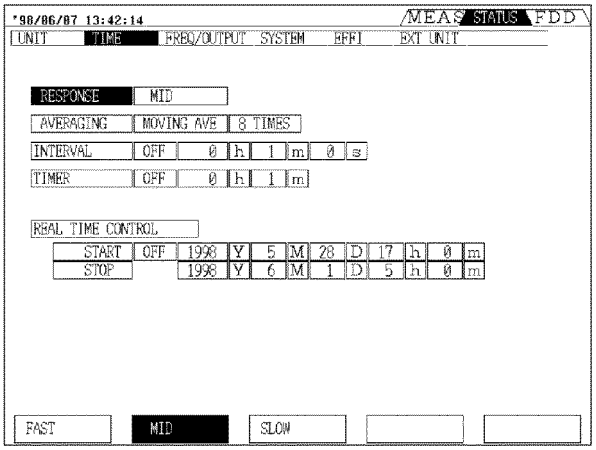

③ Frequency screen [**FREQ/OUTPUT**]

This shows the settings for the output to FDD/printer, printing direction, saving screen color on FD, D/A output, frequency measurement function source, and frequency range of the unit.
With the HIOKI 3193-10, FDD ([FD], [FD&PRINT]) cannot be selected as data output.

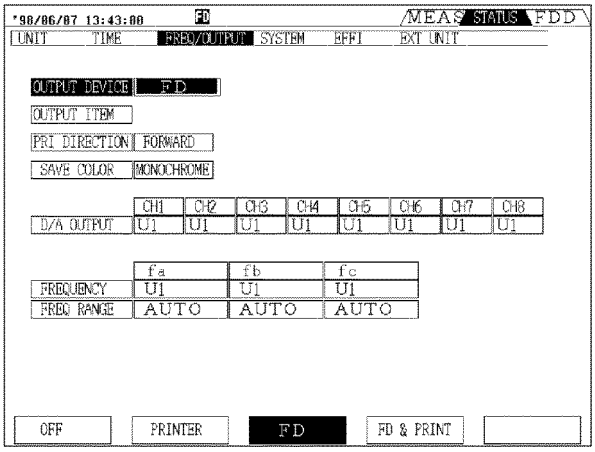

④ System screen [**SYSTEM**]

This shows the settings for the GP-IB/RS-232C, display color, LCD backlight, calculation, beep sound, display of input out-of-range, language, real-time, system reset.

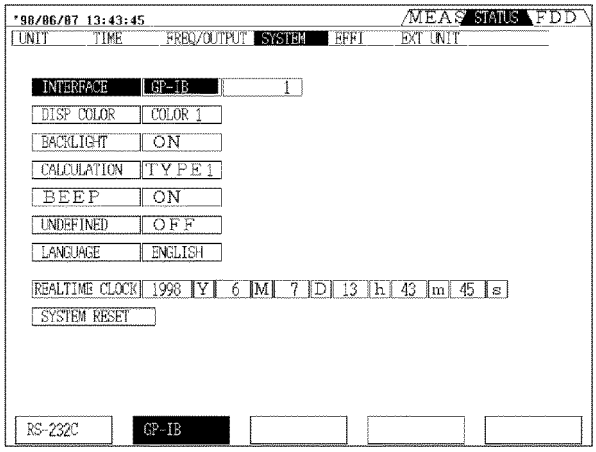

⑤ Efficiency screen [**EFFI**]

This sets the items to be substituted in the efficiency calculation expression.

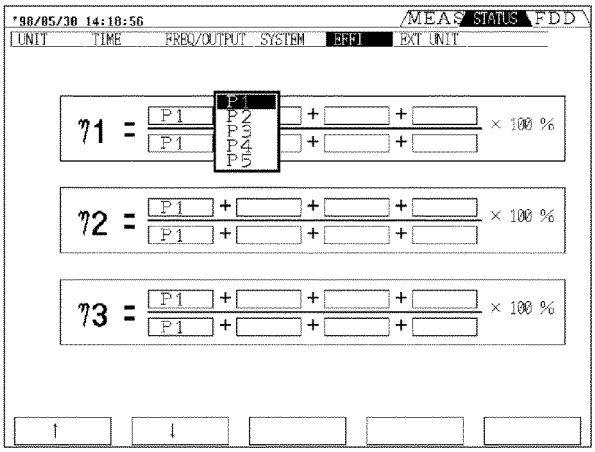

(6) External input screen [**EXT UNIT**]

This is displayed when the optional 9603 EXTERNAL SIGNAL INPUT UNIT is installed, and some settings are made for the 9603.

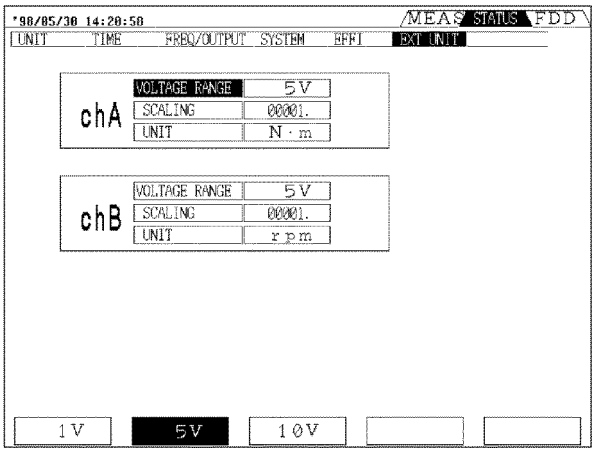

(7) Harmonic waveform screen

This is displayed when the optional 9605 HARMONIC/FLICKER MEASUREMENTS UNIT is installed. (See 9605 Instruction Manual)

2.2.4 FDD Screen (Only 3193)

This supports file name setting of a floppy disk, and saving and loading of the unit settings.

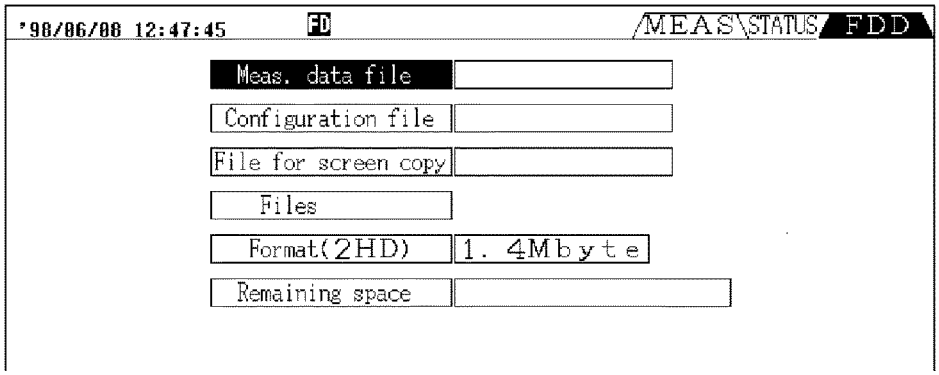

2.3 Indicators

The following indicators are shown by panel key operation.

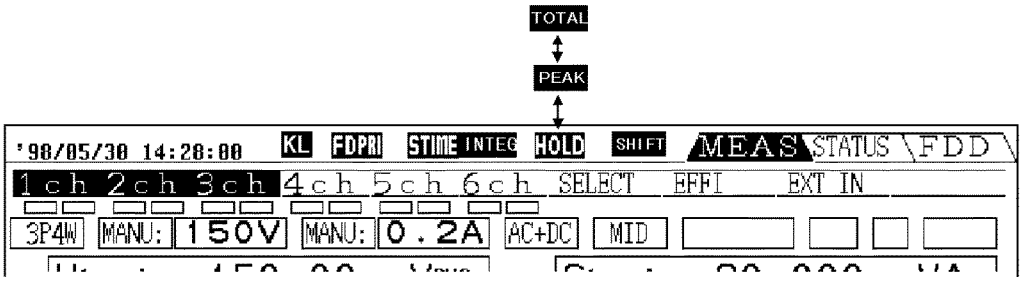

SHIFT	Indicates when the **SHIFT** key is pressed. Pressing again goes off.
KL	Indicates key lock state (red), and remote state by GP-IB/RS-232C (yellow).
HOLD	Indicates the displays are held.
PEAK	Indicates the peak hold function is active.
TOTAL	Indicates total value after time averaging.
STIME	Indicates during real time control. A blue display indicates standby during real-time control, and a yellow display indicates within setting time.
INTEG	Indicates integration or operation by time controls. A yellow display indicates that operation is in progress, and a blue display indicates during waiting.
FD	Indicates the output method is set to FDD.
PRI	Indicates the output method is set to printer. A yellow display indicates normal and a red display indicates there is no paper or printer lever is head-up.

2.4 Peak Over Indication

If the input voltage or current waveform peak exceeds six times the range value, a "PEAK" indication appears.
These indications appear on the screen below the channel number, the voltage indication on the left and the current indication on the right, so that even a "PEAK" state can be detected even for channels not currently displayed.
For example, the following indications mean that the current on channel 4 and the voltage on channel 6 have peak values exceeding six times the range value.

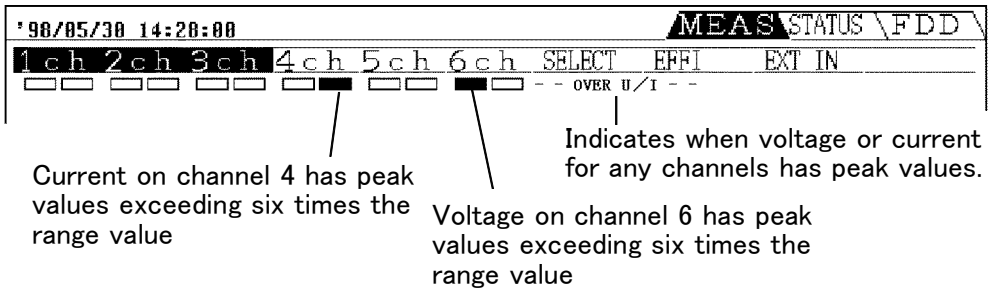

NOTE

These indications are only valid within the range of the maximum input voltage and current for each input unit.

Chapter 3
Preparation for Measurement

3.1 Notes on Use

⚠ DANGER

- Always connect the powermeter input (including current sensor) to the secondary side of the breaker. On the secondary side of a breaker, even if the lines are shorted the breaker can trip and prevent an accident. On the primary side, however, the current capacity may be large, and in the event of a short-circuit there may be a serious accident.
- Once the connections are made, do not touch the input terminals, and the voltage and current transformers. There are exposed live parts, and a danger of electric shock or serious accident.
- Check that the terminals are tightened securely. If the connections should become detached, there is a danger of a short-circuit or electric shock accident. Additionally, if the connections are not properly tightened, the contact resistance increases, which may lead to the generation of heat, or fire.
- The maximum input voltage and current for this unit depend on the input unit being used. Do not apply an input exceeding the maximum input voltage and current specified for the input unit. Exceeding the maximum input voltage or current could damage the unit or cause a serious accident.

⚠ WARNING

- **In order to prevent electric shock and short-circuit accidents, shut off the power to the line to be measured before connecting the direct connection voltage and current cables to the terminals.**
- **Be sure to connect the voltage input terminals, current input terminals correctly. Measurement which is attempted with the wiring connected incorrectly may cause damage to the unit or a short-circuit.**
- **To avoid electrical accidents and to maintain the safety specifications of this instrument, connect the power cord provided only to a 3-contact (two-conductor + ground) outlet.**
- **When using an external voltage transformer, do not leave the secondary side short-circuited. If a voltage is applied to the primary while the secondary is short-circuited, a high current will flow through the secondary, which could lead to fire or malfunction.**
- **When using an external current transformer, do not leave the secondary side open-circuit. If a current flows through the primary while the secondary is open-circuit, this can generate a high voltage on the secondary, which is extremely dangerous.**

⚠ CAUTION

- To avoid electrical accidents, use wiring with more than adequate current carrying capacity and voltage insulation properties.
- When the power is turned off, do not apply voltage or current to the voltage input terminal, current input terminal, or clamp sensor. Doing so may damage the unit.

NOTE

- For 3P3W, 3V3A measurement, the active power values for each channel are found from the voltages between lines and the currents on each line, and have no individual significance.
- If the maximum values of the voltage or current on the lines being measured exceed the measurement range of this unit, use an external voltage transformer (PT) or current transformer (CT). In this case, by setting the corresponding PT and CT ratios with the scaling function of this unit, you can directly read off the measured values. See Section 4.5, "Setting the Scaling."
- For combinations 1P3W and above, there are restrictions on the combinations of input units. See Section 4.1, "Setting the Wiring Mode."
- When using an external voltage transformer (PT) or current transformer (CT), its precision, phase accuracy, frequency characteristics, and so on, may greatly affect the error in the measured power value. Use transformers with adequate frequency characteristics and small phase error for the frequency band of the line being measured.
- When using a voltage transformer (PT) or current transformer (CT), ground one side of the secondary for safety.

Pre-Measurement Inspection

Before using the instrument the first time, verify that it operates normally to ensure that the no damage occurred during storage or shipping. If you find any damage, contact your dealer or Hioki representative.

Peripheral Device Inspection

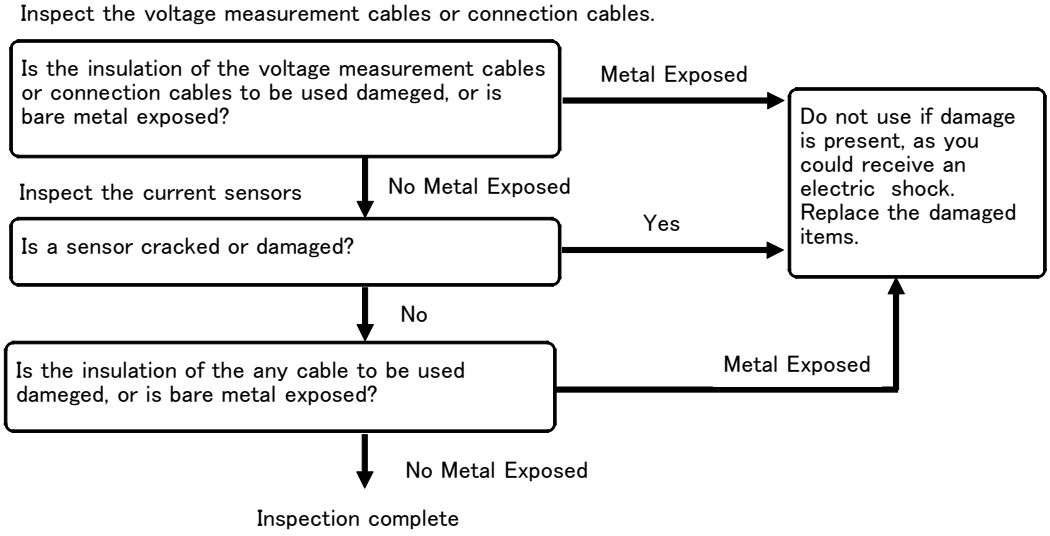

3.2 Basic Operating Procedure

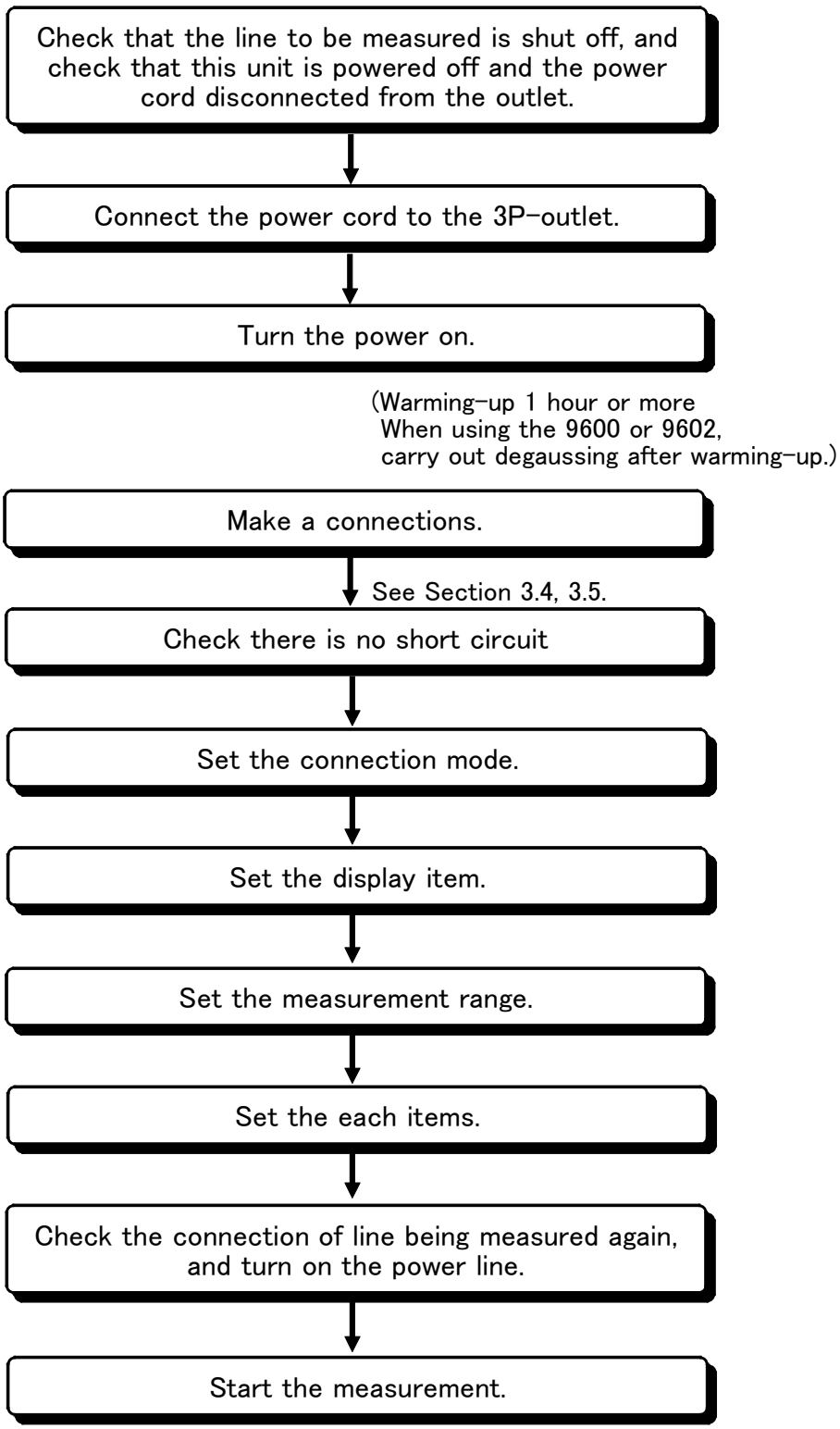

3.3 Powering On

⚠ WARNING

- **Before turning on the power, make sure that the voltage of the power supply being used matches the supply voltage indicated on the rear panel of the unit. If an attempt is made to use an improper supply voltage, there is danger of damage to this unit and of life-threatening risk to the operator.**
- **To avoid electrical accidents and to maintain the safety specifications of this instrument, connect the power cord provided only to a 3-contact (two-conductor + ground) outlet.**
- **The power switch has a microgap construction, and it is therefore essential to use it close to a power outlet. When the unit is not in use, and while making connections to the circuit being tested, isolate the unit electrically from the power supply, for example by removing the power cord plug from the outlet.**

⚠ CAUTION

- Should the unit emit smoke, or a strange smell or strange sound, immediately stop testing operations, power the unit off, and remove the power cord from the outlet, shut off the circuit being tested, disconnect the unit, and consult your HIOKI representative. Continued use of the unit could lead to fire or electric shock accidents.
- When the power is turned off, do not apply voltage or current to the voltage input terminal, current input terminal, or clamp sensor. Doing so may damage the unit.

1. Confirm that the voltage of the power supply being used matches the supply voltage indicated on the rear panel of the unit.
2. Confirm that the power switch on the front panel is off.
3. Connect the supplied power cord to the AC inlet on the rear pane.
4. Connect the power cord to a grounded three-pin outlet. If no grounded outlet is available, use the supplied ground adapter.
5. Turn on the power switch on the front panel.
6. The unit starts the self-test. It is completed after about 10 seconds.

Self-Test

In the self test, the following tests are carried out, then after about 10 seconds the measurement screen automatically appears.

- Unit version
- Installed options
- RAM check

NOTE

If there is a problem in the settings, this screen remains displayed and the unit stops. If this happens again after powering off and on, the unit has developed a fault. Stop measurement, and shut off the line being measured, then power off the unit. Disconnect the test wiring and the power cord. Contact your HIOKI service representative for repair.

3.4 Connecting the Direct Input Unit

The following diagrams show the connections in various modes when using the 9600 AC/DC DIRECT INPUT UNIT and 9601 AC DIRECT INPUT UNIT.

■ Single-phase two wires (1P2W)

i: 1 to 6

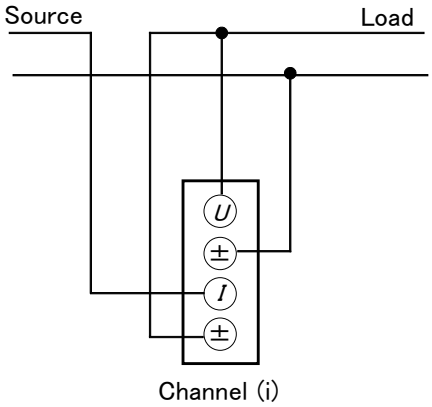

Connecting the measured line directly to the unit

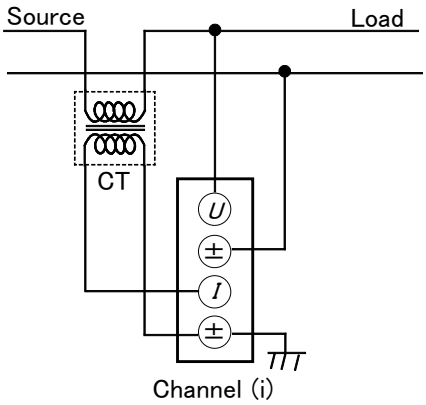

Using the current transformer (CT)

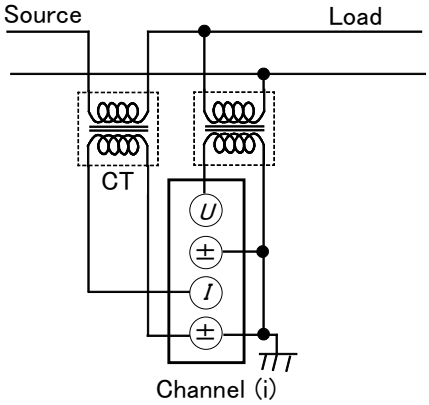

Using the voltage and current transformers (PT, CT)

■ Single-phase three wires (1P3W)

i: 1, 3, 4, 5

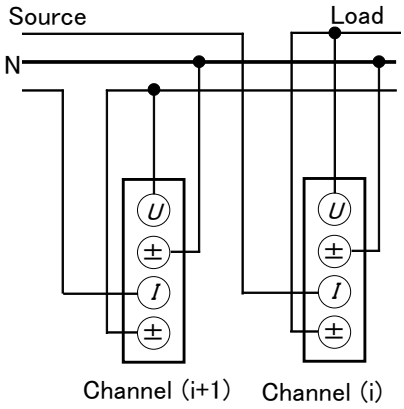

Connecting the measured line directly to the unit

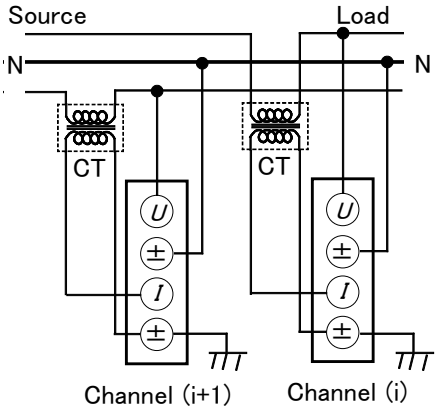

Using the current transformer (CT)

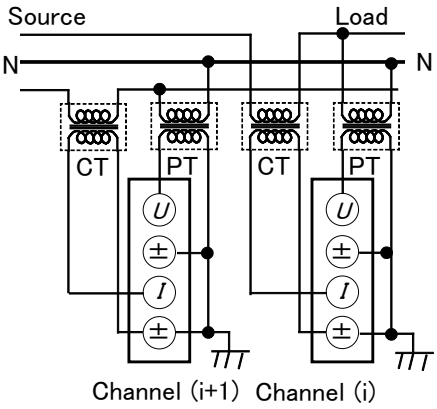

Using the voltage and current transformers (PT, CT)

■ Three-phase three wires (3P3W)

i: 1, 3, 4, 5

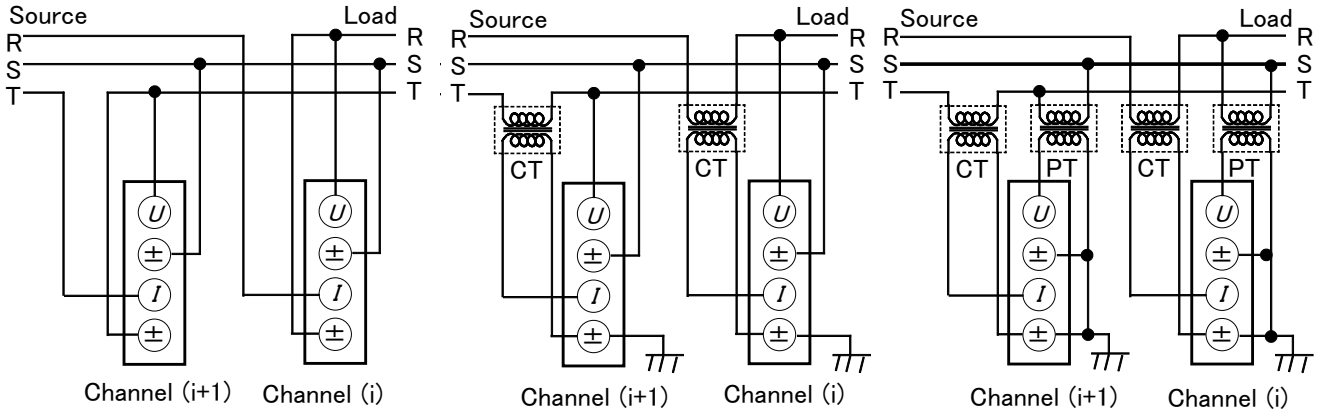

Connecting the measured line directly to the unit

Using the current transformer (CT)

Using the voltage and current transformers (PT, CT)

■ Three-phase three wires (3V3A)

i: 1, 4

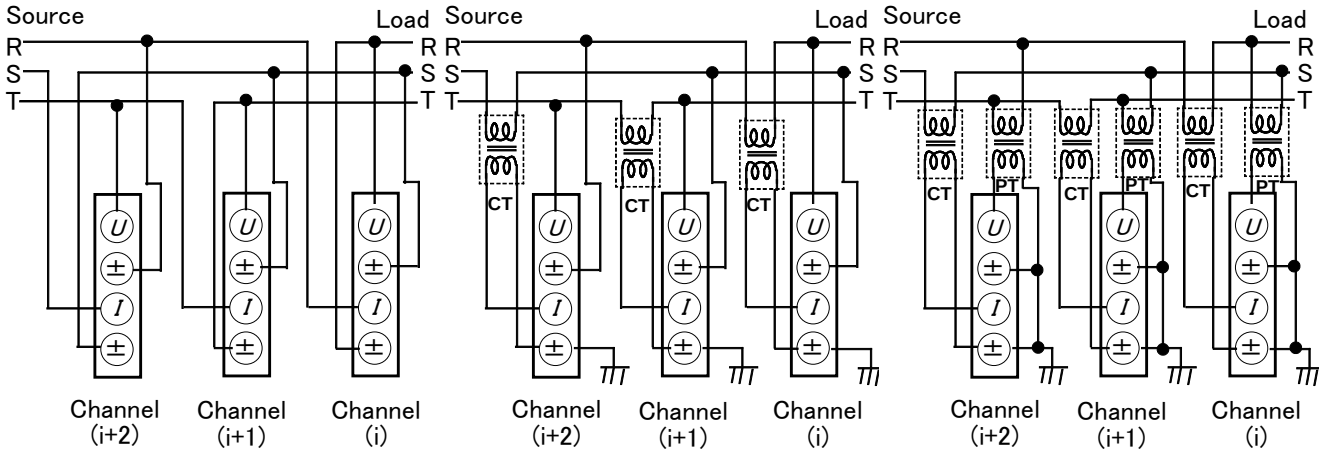

Connecting the measured line directly to the unit

Using the current transformer (CT)

Using the voltage and current transformers (PT, CT)

■ Three-phase four wires (3P4W)

i: 1, 4

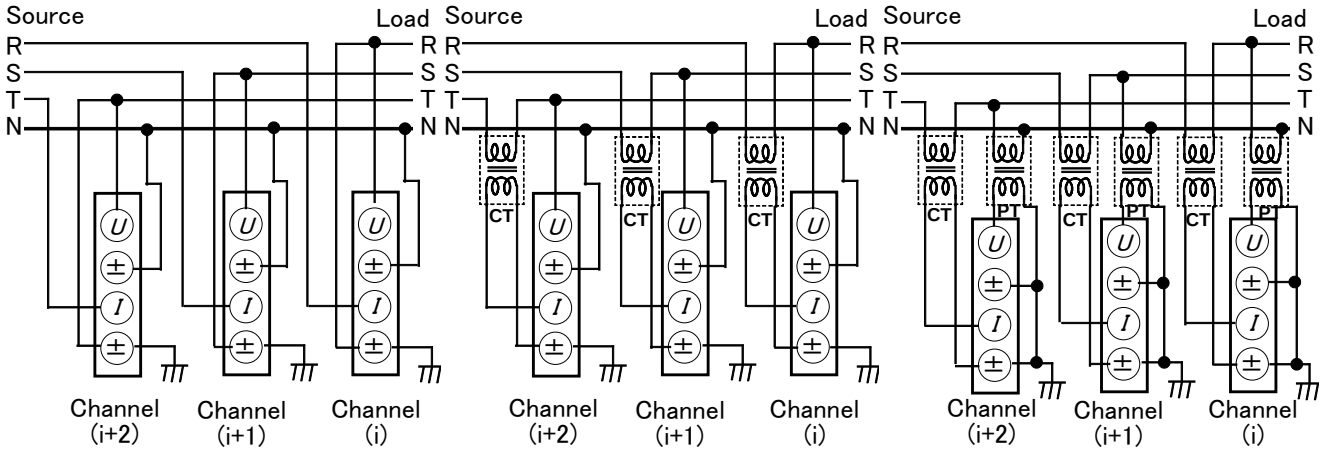

Connecting the measured line directly to the unit

Using the current transformer (CT)

Using the voltage and current transformers (PT, CT)

3.5 Connecting the Clamp Input Unit

The following diagrams show the connections in various modes when using the 9602 AC/DC CLAMP INPUT UNIT.

Single-phase two wires (1P2W)

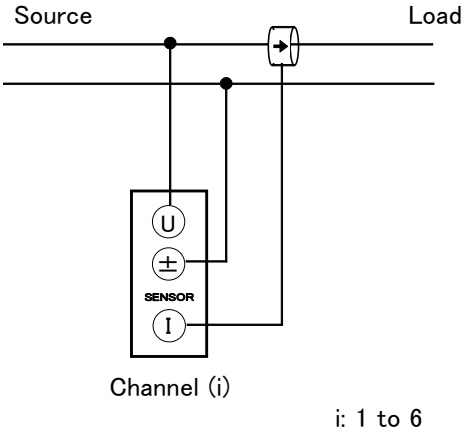

Single-phase three wires (1P3W)

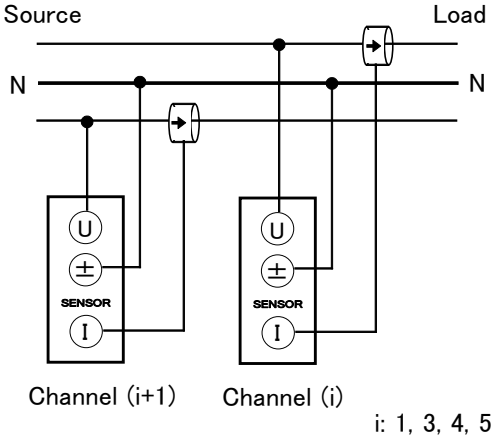

Three-phase three wires (3P3W)

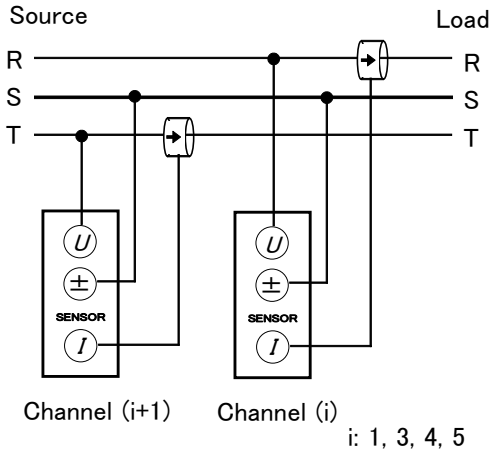

Three-phase three wires (3V3A)

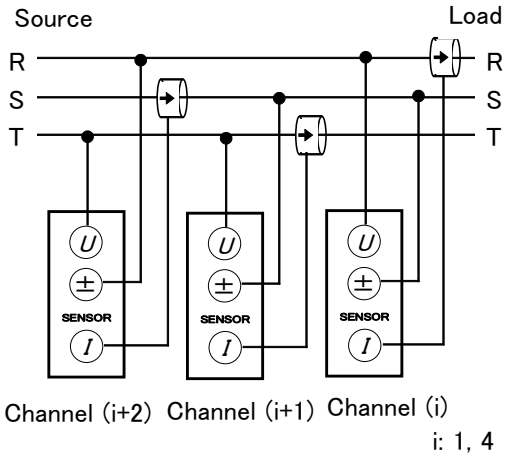

Three-phase four wires (3P4W)

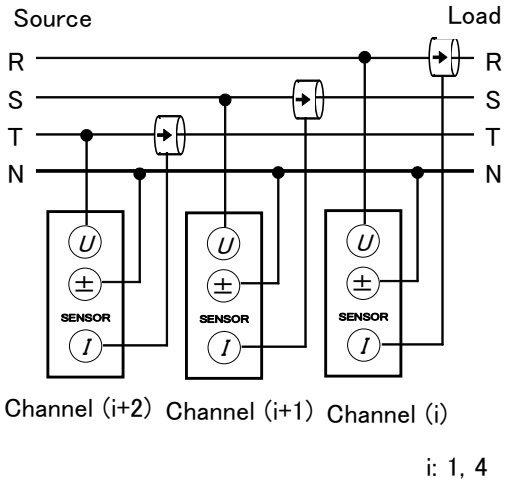

3.6 Measurement Losses

This unit is designed to have low measurement losses, and an extremely small effect on the power measurement values, but the following variant connection methods may be used to further reduce the effect of measurement losses.

(1) When the voltage input is connected to the power supply side, the measurement includes losses from the input resistance of the current input terminals, but this yields the minimum measurement losses when the measured voltage is high and the measured current is low.

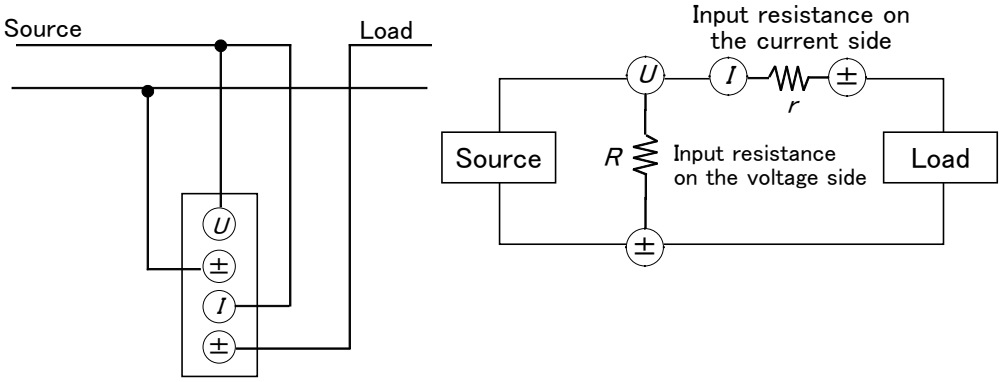

(2) When the current input is connected to the power supply side, the measurement includes losses from the input resistance of the voltage input terminals, but this yields the minimum measurement losses when the measured voltage and measured current is low.

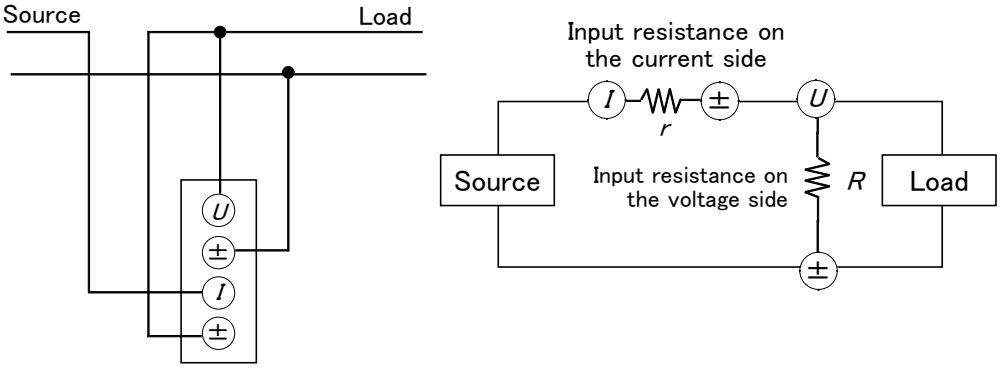

NOTE When using a clamp-on input unit as the current sensor, the measurement losses of the current sensor can be ignored, so method (1) above should be used.

3.7 Error Messages

Operation	"Integration in progress (press START/STOP key to stop)." "Integration on standby (press SHIFT + START keys to reset)." "Reset not possible while integration in progress." "Time averaging is on." "Stop time has passed, so real-time control is turned off." "Output in progress." "Hold function operating." "Peak hold function operating." "Program load failed."
Floppy	"Disk access error" "File cannot be opened" "Save failed" "Load failed" "Formatting failed" "File names may not include spaces." "Disk is write-protected" "Disk full"
Printer	"Printer: head temperature error." "Printer: motor drive voltage error." "Printer: head is up." "Printer: no paper."

If an error message appears when the instrument is turned ON, the unit has malfunctioned. Please contact your local distributor for further assistance.

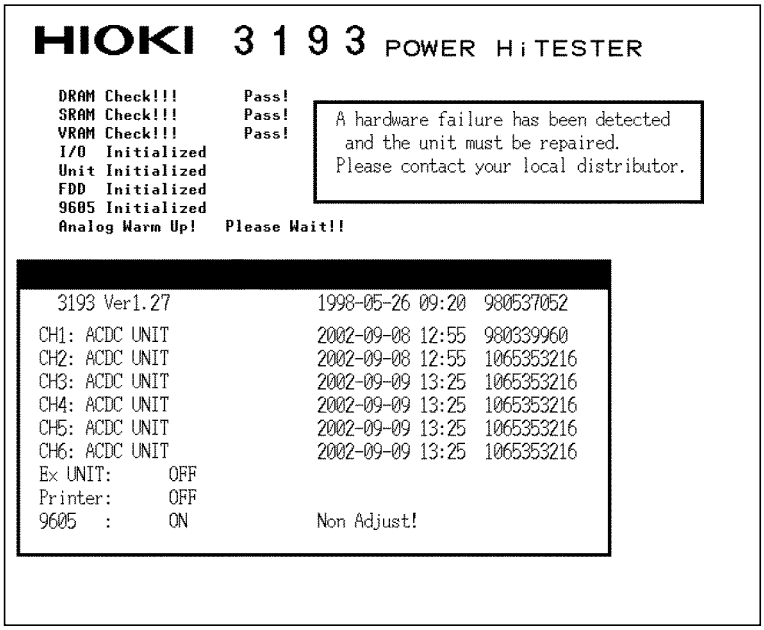

3.8 System Reset

To reset settings to the initial factory settings, there are following two methods.

- When powering off

  Turn the power on pressing the **SHIFT** key until beep sounds.

- On the STATUS screen

  1. Press the **STATUS** key to display the SYSTEM screen.
  2. Using the **CURSOR** keys, move the cursor to "SYSTEM RESET", and press the F5 (RESET) key.
  3. Pressing F1 (YES) carries out system reset.

All settings are reset to the following their initial factory settings.

Connection mode	1P2W (all channels)
Coupling mode	AC (all channels)
Voltage range	AUTO, RMS (all channels)
Current range	AUTO, RMS (all channels)
PT/CT/SC ratios	OFF (all channels) initial value: 1
LPF	OFF (all channels)
phF	OFF (all channels)
Peak	*U* (all channels)
Response	MID
Average	OFF, averaging time: 8
Interval time	OFF, initial value: 0h1m00s
Timer	OFF, initial value: 0h1m00s
Real time control	OFF
Output type	OFF
Output item	ON (all items)
Direction of printing	Forward
Screen save color	Monochrome
D/A output	all *U*1
Frequency measurement	all *U*1 for *f*a, *f*b, *f*c
Frequency range	all AUTO
Interface	GP-IB, address: 1

Display color	Normal
Backlight	OFF
Calculation expression (*S*,*Q*)	TYPE1
Beep sound	ON
Out of range input	OFF
Language	JAPANESE
Real time	Current time
Zero suppress function (Integration)	0.5%
Efficiency screen on STATUS	*P*1 both denominator and numerator for $\eta 1$, $\eta 2$, $\eta 3$
External input screen on STATUS	Channels A and B: 10 V range, scaling: 1, unit:V
Magnification display for channel 1 to 6 on MEAS	U / I / P / λ
Details display for channel 1 to 6 on MEAS	U / I / P / $\lvert Up \rvert$ / S / Q / λ
4 items display on MEAS	$U1$ / $I1$ / $P1$ / $\lambda 1$
8 items display on MEAS	$U1/I1/P1/S1/Q1/\lambda 1/\phi 1/Pk1$
16 items display on MEAS	$U1/I1/P1/S1/Q1/\lambda 1/\phi 1/Pk1$ both left and right

3.9 Operations During Power Failure

⚠ CAUTION

- In the DC and AC+DC modes, after the power is restored, an offset due to the circuit design may be output. In some cases the data may be invalid.
- When the unit is powered off as a result of a power failure, continuing to input voltage and current may damage the unit.

Screen display

The screen display goes blank, and after power restoring redisplays the screen. However, the STATUS or FDD screen is displayed before power failure, the MEAS screen for channel 1 is redisplayed.

Measurement data

If the display data was being held when power was lost, all of the data that was being held is not retained.

Integration data

- Manual integration
  A power failure is treated as a zero input and zero elapsed time; after the power is restored integration restarts.
- Timer integration
  A power failure is treated as a zero input and zero elapsed time; after the power is restored integration restarts, and stops when the timer time has elapsed.
- Real-time control integration
  If the power failure starts and ends while the unit remains on standby, there is no effect.

  If a power failure starts while the unit is on standby, and ends after the set start time, integration starts from the time when the power is restored. In this case the interval from the set start time until the power is restored is treated as a zero input. The elapsed time is shorter than time from start to stop.

  A power failure during integration operation is treated in the same way as for timer integration.

Floppy disk drive (only 3193)

- When automatic output is selected

  After the power is restored, a character string indicating that there was a power failure is output. (time of power failure and restoring)

- Power failure during saving

  The data being saved is invalid. In the worst case there is a possibility of the file itself being corrupted.

- Power failure during loading

  The setting is invalid. The system reset should be carried out. Turn on the power pressing the **SHIFT** key.

Printer

- During manual printing

  After power is restored, the printing is not started. Restart the printing.

- During automatic output and before stop time the power is restored

  After power is restored, the time when the power failure occurs and the power is restored are printed and then printing is restarted.

- During automatic output and after stop time the power is restored

  After power is restored, the time when the power failure occurs and the power is restored are printed and then operation stops.

Chapter 4
Setting and Using the Basic Functions

4

4.1 Setting the Wiring Mode (1P2W to 3P4W)

This unit can have up to six input unit channels, allowing a single unit to measure anything from six 1P2W lines to two 3P4W systems. The connection mode of each channel also appears on the screen as shown below.

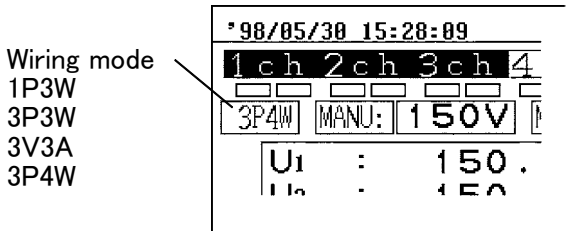

Set the line to be measured under "UNIT" on the STATUS screen. The channel combinations set here determine the screen configuration.

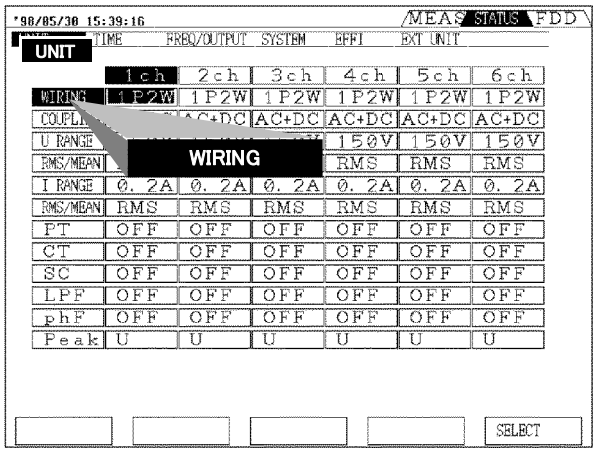

UNIT Page

1. Press the **STATUS** key, then use the **PAGE** (◀▶) keys to display the "UNIT" page.

2. Using the **CURSOR** keys, move the cursor to the "WIRING" item.

3. Press F5 (SELECT) to switch to the connection setting screen.

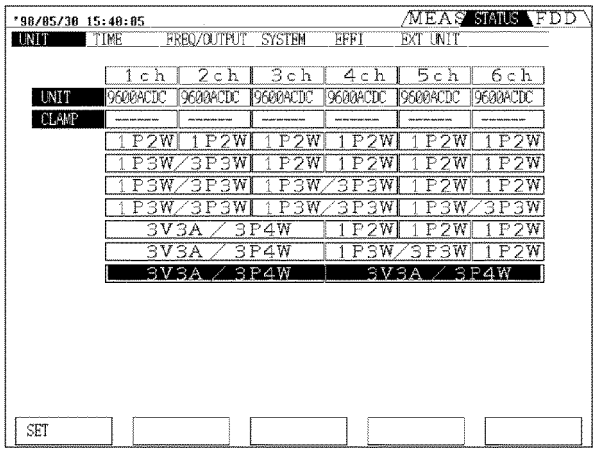

Wiring Screen

4. In the Wiring screen, a list of the installed input units appears.
   Move the cursor to the desired combination to be selected.

5. Press F1 (SET) to confirm. This automatically returns to the previous screen.

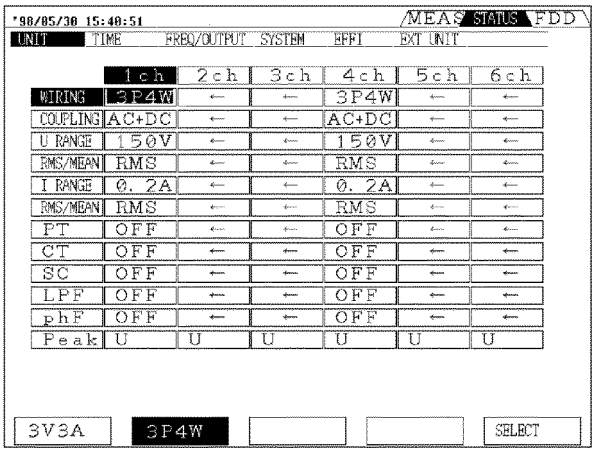

UNIT Page

6. When a number of channels are combined, move the cursor to the wiring item.
   When using two channels, select from F1 (1P3W) and F2 (3P3W), and for three channels select from F1 (3V3A) and F2 (3P4W).

7. Press the **MEAS** key to return to the measurement screen, where measurement is now possible.

NOTE

On the Wiring screen, if the combination is not changed and then F1 is pressed, the setting items may be initialized. Pressing the **PAGE** key to exit from the screen does not initialize the items.

NOTE

- It is only possible to select from the combinations shown in the connection setting screen.
  For combinations 1P3W and above, adjacent units must be of the same type.

	Channels					
	1	2	3	4	5	6
①	1P2W	1P2W	1P2W	1P2W	1P2W	1P2W
②	1P3W / 3P3W		1P2W	1P2W	1P2W	1P2W
③	1P3W / 3P3W		1P3W / 3P3W		1P2W	1P2W
④	1P3W / 3P3W		1P3W / 3P3W		1P3W / 3P3W	
⑤	3V3A / 3P4W			1P2W	1P2W	1P2W
⑥	3V3A / 3P4W			1P3W / 3P3W		1P2W
⑦	3V3A / 3P4W			3V3A / 3P4W		

- When using the 9602 AC/DC CLAMP INPUT UNIT, only a combination of the same current sensor type can be selected. In other cases, all are set to 1P2W.
- When using the 9602 AC/DC CLAMP INPUT UNIT, if the sensor configuration is changed (including with the sensor not connected), and the unit is then powered on, "Resetting due to configuration change." is displayed. Pressing F1 (YES) resets settings. Pressing F2 (NO) does not reset and settings remain unchanged, but the display value for current may be changed. Return the configuration settings and power on again. The message is not displayed.
- When using clamp-on units, if the sensor rating is changed and the unit is then powered on, in the 1P2W mode the CT ratio within the unit is automatically set accordingly. For combinations 1P3W and above, if other channels in the combination have different ratings the combination is disabled for measurement.
- The display items in the various modes are as follows.

Measurement line	Mode	Display item
Single-phase two-wire (1φ2W)	1P2W	U, I, P, Q, S, λ/φ, |Up|/|Ip|
Single-phase three-wire (1φ3W)	1P3W (channels 1+2)	U1, U2, U12, I1, I2, I12, P1, P2, P12, Q1, Q2, Q12, S1, S2, S12, λ1/φ1, λ2/φ2, λ12/φ12, |U1p|/|I1p|, |U2p|/|I2p|
Three-phase three-wire (3φ3W)	3P3W (2 voltages, 2 currents, 2 power meters method) (channels 1+2)	U1, U2, U12, I1, I2, I12, P12, Q12, S12, λ12/φ12, |U1p|/|I1p|, |U2p|/|I2p|
	3V3A (3 voltages, 3 currents, 2 power meters method) (channels 1+2+3)	U1, U2, U3, U123, I1, I2, I3, I123, P123, Q123, S123, λ123/φ123, |U1p|/|I1p|, |U2p|/|I2p|, |U3p|/|I3p|
Three-phase four-wire (3φ4W)	3P4W (channels 1+2+3)	U1, U2, U3, U123, I1, I2, I3, I123, P1, P2, P3, P123, Q1, Q2, Q3, Q123, S1, S2, S3, S123, λ1/φ1, λ2/φ2, λ3/φ3, λ123/φ123, |U1p|/|I1p|, |U2p|/|I2p|, |U3p|/|I3p|

- Although the display will show for each channel 3P3W or 3V3A the active power (P1, P2 and P3), reactive power (Q1, Q2 and Q3), apparent power (S1, S2 and S3), power factor (λ1, λ2 and λ3), and phase angle (φ1, φ2 and φ3), please be aware that these figures have no meaning.
- Power factor (λ) and phase angle (φ) are not be displayed simultaneously.
- The measurement values for three-phase three-wire in 3P3W and 3V3A mode are same because of same measurement method.

4.2 Setting the Coupling Mode (DC/AC+DC/AC)

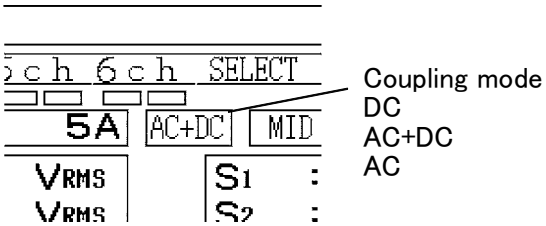

The coupling mode can be selected according to the measurement being performed.

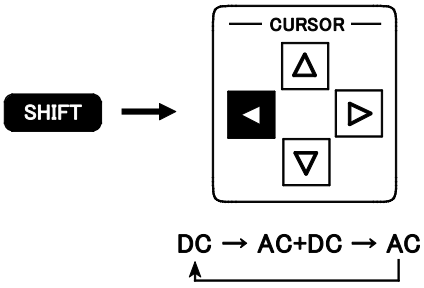

Switching using the panel keys

1. Switch to display the channel for which you wish to change the setting.
2. Press the **SHIFT** key, then use the **CURSOR ◀** key to change.
   Pressing the **CURSOR ◀** key switches connection mode.

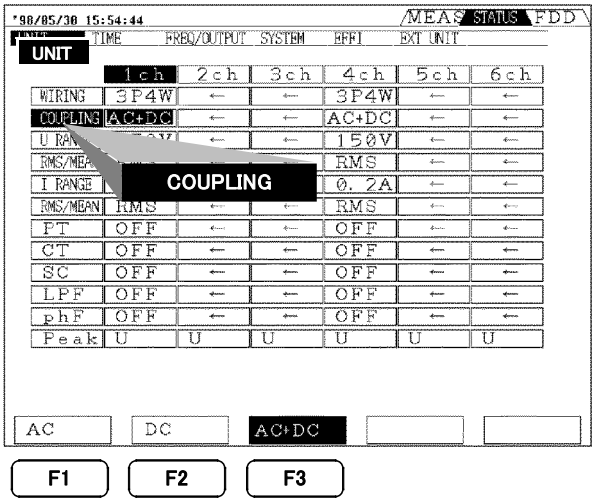

Switching on the STATUS screen

1. Press the **STATUS** key, then use the **PAGE** (◀▶) keys to display the "UNIT" page.
2. Select mode from F1 to F3.

NOTE

- The voltage and current for a single channel and for combinations of 1P3W and above are forced to the same settings. In this case the setting for the lowest-numbered channel is used.
- When DC mode is selected, the polarity is displayed for the voltage and current.
- In DC mode, reactive power (Q), power factor (λ), and phase angle (ϕ) are displayed but they are meaningless.
- For DC mode, the active power (P) is displayed as a calculated AC+DC value. For this reason, if there is a superimposed AC waveform the value may not agree with the $U \times I$ calculation.
- When AC+DC or AC mode is selected, the display values of voltage and current are always positive values.
- When using the 9601 AC DIRECT INPUT UNIT or AC current sensor for the 9602 AC/DC CLAMP INPUT UNIT, DC or AC+DC mode cannot be selected.

4.3 Switching the Voltage Range and Current Range

When the voltage range and current range is displayed on the screen for each channel, it is also possible to change the ranges directly with the panel keys. This is also possible from the STATUS screen in the "UNIT" display.

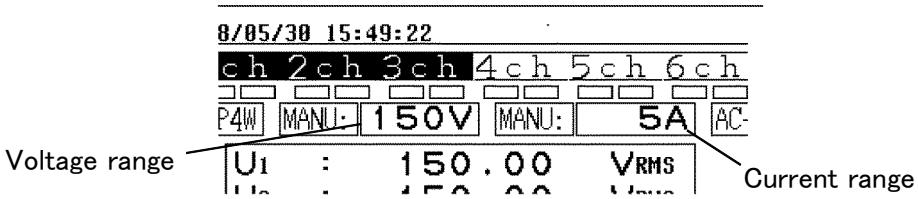

Effective input range

The effective input range is 5% to 110% of range.
(for the 9600 and 9601, 5% to 100% for 1 kV range only, for the 9602, 5% to 100% for 600 V range only)

Display range

The value which can be displayed is up to 130% of range. If the value exceeds this range, "o.r" is displayed.

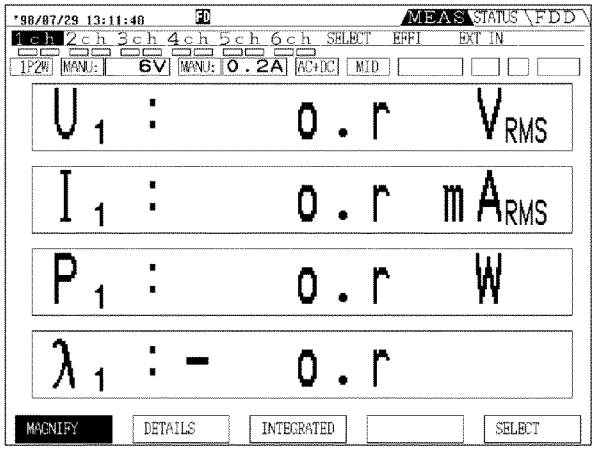

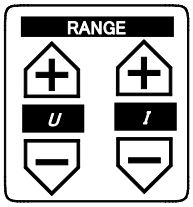

6 V ⇔ 15 V ⇔ 30 V ⇔ 60 V ⇔ 150 V ⇔ 300 V ⇔ 600 V ⇔ 1 kV

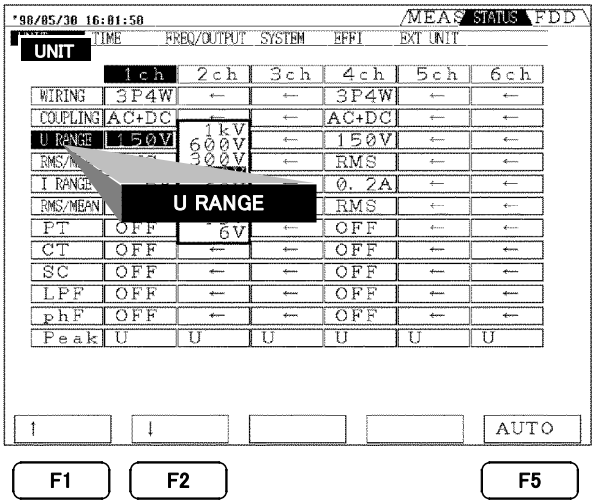

Switching the range on each channel screen.

1. Switch to display the channel for which you wish to change the setting.
2. Hold down the panel **RANGE** (+,-) key until the desired setting range is displayed.
3. To set auto ranging, hold down the panel **RANGE** (+) key or press both (+,-) keys simultaneously.
4. To cancel auto ranging, press either of the + and − keys.

Switching on the STATUS screen

1. Press the **STATUS** key, then use the **PAGE** (◀▶) keys to display the "UNIT" page.
2. Using the **CURSOR** keys, move the cursor to the channel to be changed of the "U RANGE" or "I RANGE" item.
3. Select range from F5 (AUTO), F1 (↑; range up), F2 (↓; range down).
4. Press the **MEAS** key to return to the measurement screen.

NOTE

- For channel combinations of 1P3W and above, the channels are forced to the same range. In this case the range for the lowest-numbered channel is used for all of the channels.
- The auto ranging function switches up a range when a measurement value exceeds 110% of measurement range (out-of-range) or when a waveform peak exceeds six times the range value (peak over), and switches down a range when the value is less than 30% of the nominal range. When measuring a distorted waveform the range selection may not be stable. In this case use manual range setting.
- When the integration function time average has started, auto ranging is disabled, and the range remains fixed from that point.

4.4 Effective Value (RMS) or Mean Rectified Value (MEAN) Selection

For voltage and current measurement, this unit has two different rectification circuits, which can be selected according to the signal being measured.

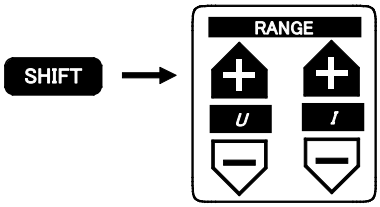

Switching for each channels on MEAS screen

- To switch the voltage, press the **SHIFT** key, and then press the **+** key on the *U* side.
- To switch the current, press the **SHIFT** key, and then press the **+** key on the *I* side.

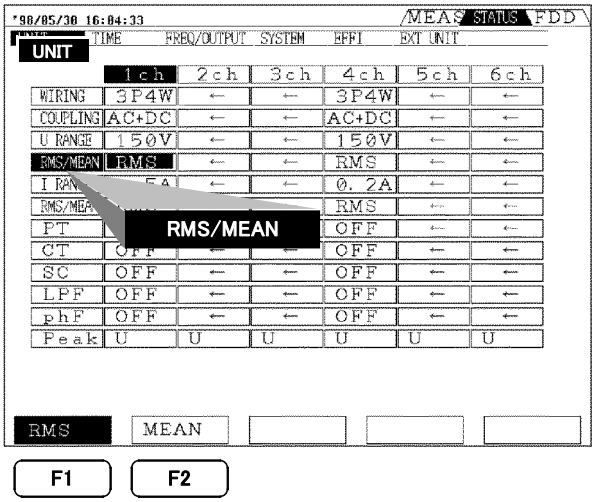

Switching on the STATUS screen

1. Press the **STATUS** key, then use the **PAGE** (◀▶) keys to display the "UNIT" page.
2. Using the **CURSOR** keys, move the cursor to the channel to be changed of the "U" or "I" item.
3. Select F1 (RMS) or F2 (MEAN).
4. Press the **MEAS** key to return to the measurement screen.

NOTE

- Display of "RMS" or "MEAN" following the unit RMS and MEAN values are distinguished by displaying "RMS" or "MEAN" following the unit, as appropirate. However, these labels do not appear in the DC mode.
- The formulas for RMS and MEAN calculation depend on the option.
- For channel combinations of 1P3W and above, the channels are forced to the same rectification method, but distinct settings can be made for voltage and current.
- The RMS and MEAN values agree when the input is a perfect sine wave, but do not agree for a distorted waveform.
- Whichever of RMS and MEAN is selected, this has no effect on the active power (P), but does affect the internally derived apparent power (S), reactive power (Q), power factor (λ), and phase angle (ϕ).
- In DC mode the RMS/MEAN selection is not available.

4.5 Setting the Scaling (PT/CT/SC Ratios)

This is used for setting the ratio (PT ratio or CT ratio) when using an external voltage transformer (PT) or current transformer (CT), and the scaling factor (SC ratio) for conversion of the active power to other physical units. When a PT ratio, CT ratio, or SC ratio is set for a particular channel, on the measurement screen this appears as "SC". The ranges which can be set are as shown below.

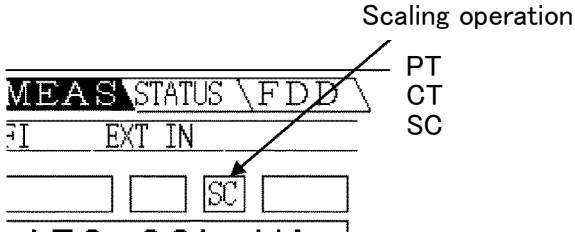

Scaling constant	Display	Setting range
PT ratio (*Kp*)	PT	0.0001 to 10000.
CT ratio (*Kc*)	CT	0.0001 to 10000.
SC (*Ksc*)	SC	0.0001 to 10000.

Function		Equation
Voltage	*U*	$U \times Kp$
Current	*I*	$I \times Kc$
Active power	*P*	$P \times Kp \times Kc \times Ksc$
Apparent power	*S*	$S \times Kp \times Kc \times Ksc$
Reactive power	*Q*	$Q \times Kp \times Kc \times Ksc$
Integrated current	*Ih*	$Ih \times Kc$
Integrated voltage	*WP*	$WP \times Kp \times Kc \times Ksc$

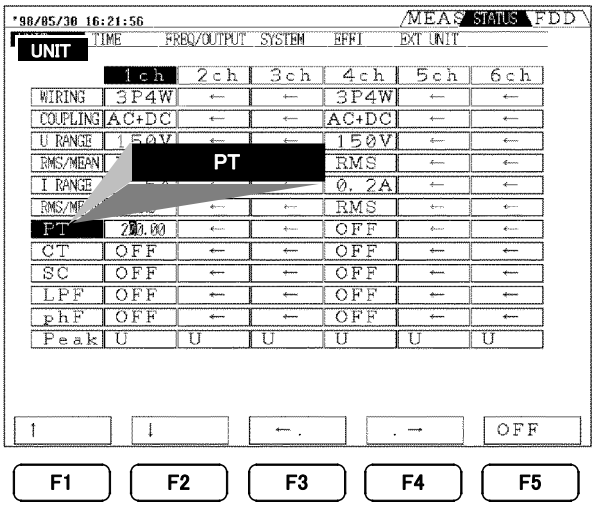

1. Press the **STATUS** key, then use the **PAGE** (◀▶) keys to display the "UNIT" page.
2. Using the **CURSOR** keys, move the cursor to the desired channel of the PT, CT or SC item.
3. Set the numerical value 0 to 9 by using F1 (↑; up), F2 (↓; down), and move the decimal point by using F3 (←.), F4 (.→). To move the digit, use the **CURSOR** keys.
4. Press the **MEAS** key to return to the measurement screen.

NOTE

- For channel combinations of 1P3W and above, the PT ratio, CT ratio, or SC ratio must be the same for all channels in the combination.
- When the channel identifies a CT6862, CT ratio of the channel is set to 2.5, as default. In this state, the current ranges are configured and the measured values can be read off directly.
  Display ranges:「1.25(A) / 2.5A / 5A / 12.5(A) / 25A / 50A」
  The default CT ratio is changeable. If you want to change this, please set the value calculated by the formula: (your desired CT ratio x 2.5). For example, when you want to set 40 as CT ratio, please set 100(=40 x 2.5).
  When CT ratio other than 2.5 (including OFF) is being set, the current ranges to be displayed are below.
  Display ranges:「0.5A / 1A / 2A / 5A / 10A / 20A」
  The actual current range configuration with the CT ratio other than 2.5 can be calculated by multiplying the set CT ratio by each of 0.5A, 1A, 2A, 5A, 10A, 20A.
- When a CT6865 is used, please set it to CT ratio 2.
  The display ranges are [10A/20A/50A/100A/200A/500A], but the range structure is actually configured to be double the CT ratio after internal computation.

4.6 Setting the Low-pass Filter (LPF)

The input units of the 3193 are provided with a low-pass filter function for restricting the frequency characteristics.
By using an appropriate filter selection it is possible to eliminate harmonics.

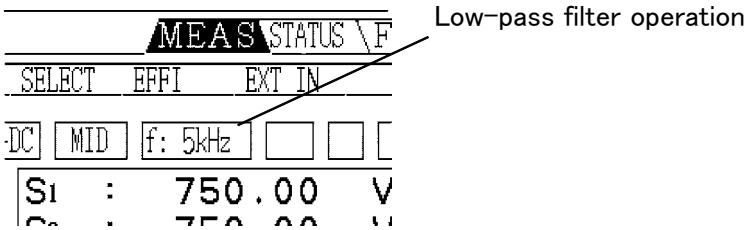

NOTE Depending on using the input units, the low-pass filter (LPF) may not be selected. The frequency range of accuracy assured varies. For details, see the specifications of the input units.

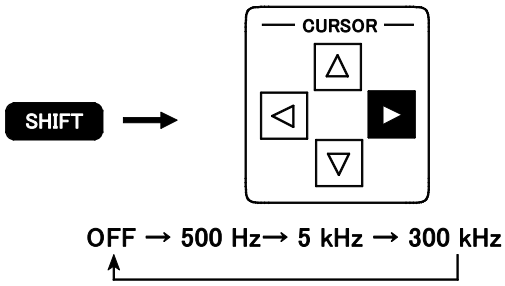

Switching using the panel keys

1. Switch to display the channel for which you wish to change the setting.
2. Press the **SHIFT** key, then use the **CURSOR ▶** key to change.
   Pressing the **CURSOR ▶** key switches low-pass filter.

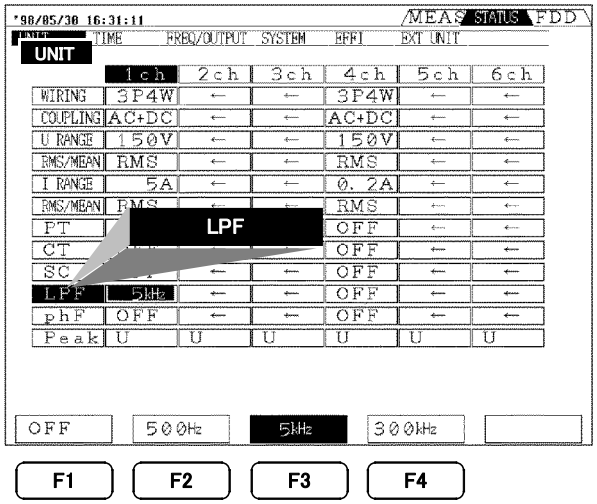

Switching on the STATUS screen

1. Press the **STATUS** key, then use the **PAGE** (◀▶) keys to display the "UNIT" page.
2. Using the **CURSOR** keys, move the cursor to the channel to be changed of "LPF" item.
3. Select desired low-pass filter from F1 (OFF), F2 (500 Hz), F3 (5 kHz), F4 (300 kHz).
4. Press the **MEAS** key to return to the measurement screen.

4.7 Setting the Phase Polarity Discrimination Filter

For distorted waveforms such as inverter waveforms, the reactive power (*Q*), power factor (λ), and phase angle (ϕ) phase angle polarity may not be stable. In this case, by setting the phase polarity discrimination filter to "ON" stable polarity measurements can be taken.

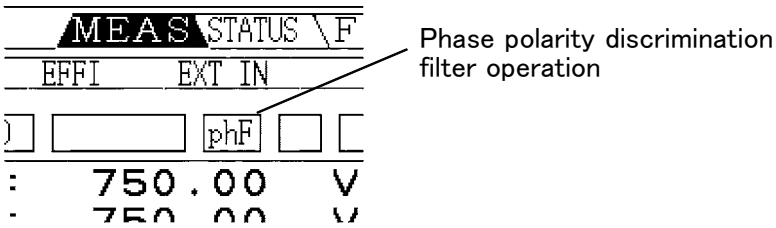

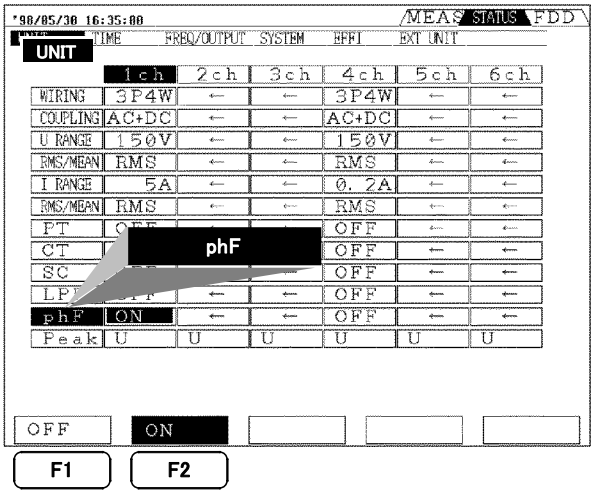

1. Press the **STATUS** key, then use the **PAGE** (◀▶) keys to display the "UNIT" page.
2. Using the **CURSOR** keys, move the cursor to the channel to be changed of "phF" item.
3. Select F1 (OFF) or F2 (ON).
4. Press the **MEAS** key to return to the measurement screen.

NOTE

- This is valid when the calculation formula for reactive power (*Q*) and apparent power (*S*) is set to "TYPE1." When the calculation formula is set to "TYPE2" or "TYPE3" the ON/OFF setting of phF has no effect.
- This has no effect on voltage (*U*), current (*I*), active power (*P*), or apparent power (*S*).
- For channel combinations of 1P3W and above, the channels are forced to the same setting.
- The filter cut-off frequency is 200 Hz, and therefore depending on the frequency components of distorted waveforms, in some cases stabilization may not be possible.
- When the frequency of measurement waveform is 200 Hz or above, set to OFF.
- When using averaging function, the polarity is not displayed.
- When the input signal level is 50% or less of the range, the polarity may not be discriminated appropriately.

4.8 Switching the Waveform Peak Value

The waveform peak value measurement can be set to voltage waveform (|*Up*(i)|) or current waveform (|*Ip*(i)|)

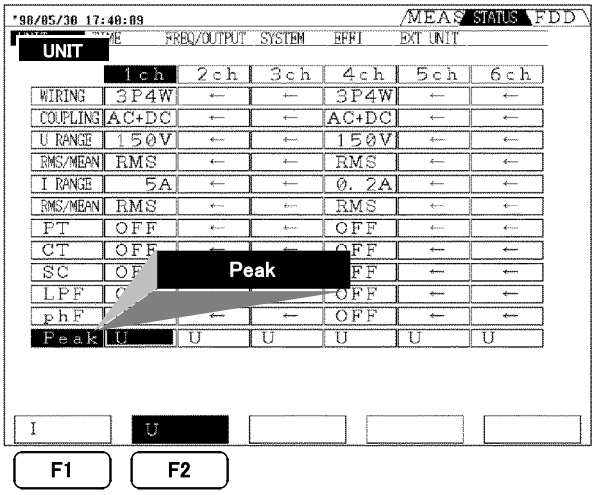

1. Press the **STATUS** key, then use the **PAGE** (◀▶) keys to display the "UNIT" page.
2. Using the **CURSOR** keys, move the "Peak" item of the desired input unit and press F1 (I) or F2 (U).

NOTE

- For any one input unit, it is not possible to measure the voltage peak value and current peak value simultaneously.
- The peak value is given as an absolute value, and it is not possible to determine the sign.
- The averaging function has no effect on peak value measurement.
- When measuring a waveform with a superimposed DC component in AC mode, the peak value of the AC waveform is found after the DC component has been eliminated.
- When a low-pass filter is activated, the peak value is found after the waveform has passed through the filter.
- For the operation principle of peak value measurement and specifications, see specifications of input units.

4.9 Setting the Response (FAST/MID/SLOW)

There are three settings for the response time of analog outputs from this unit: FAST, MID, and SLOW.
For measurement of a normal commercial power supply, the FAST setting is adequate, but is the frequency is low or there are sudden fluctuations, setting the response to MID or SLOW makes the display more stable.

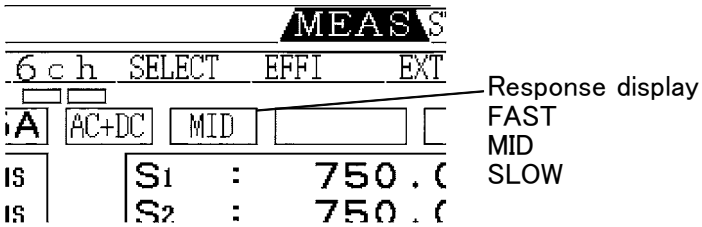

Switching using the panel keys

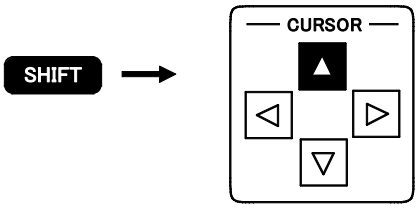

1. Switch to display the channel for which you wish to change the setting.
2. Press the **SHIFT** key, then use the **CURSOR** ▲ key to change.
   Pressing the **CURSOR** ▲ key switches response mode.

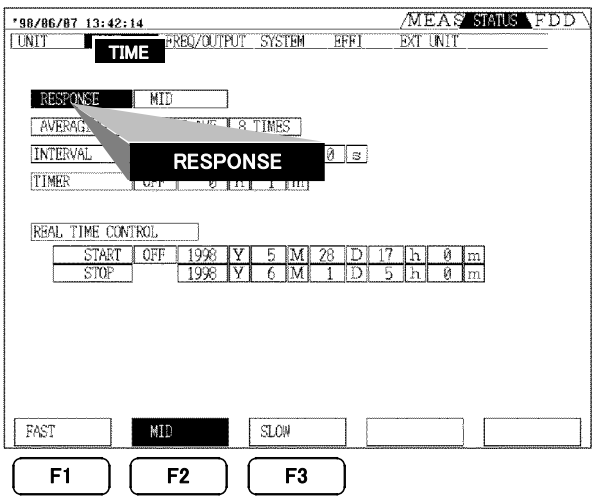

Switching on the STATUS screen

1. Press the **STATUS** key, then use the **PAGE** (◀▶) keys to display the "TIME" page.
2. Using the **CURSOR** keys, move the cursor to the "RESPONSE" item.
3. Select F1 (FAST), F2 (MID), F3 (SLOW).
4. Press the **MEAS** key to return to the measurement screen.

NOTE

- The response setting applies to all channels together. It is not possible to make separate settings for each channel.
- The display refresh rate does not depend on the response setting.
- The response setting does not affect a channel for which the DC mode is selected.
- If the display is unstable even with the SLOW setting, use the averaging function as well.

4.10 Setting the Averaging

(Time averaging/Moving averaging/Exponential averaging)

This unit provides three averaging functions. The time average outputs the average over a fixed time interval, and the moving average and exponential average provide values which reflect the previous values.

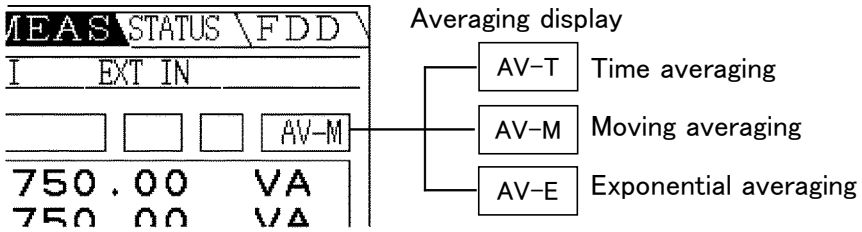

NOTE

- This setting applies to all channels together. It is not possible to make separate settings for each channel.
- This function does not affect the harmonic analysis/flicker function.
- The D/A outputs give the values obtained by averaging.
- Waveform peak measurement values are not averaged.
- If [TYPE1] is selected as the calculation type while using averaging (time averaging, moving averaging, or indexed averaging), the "si" and "su" polarities for each channel are calculated as +1.
- Calculation is performed 16 times per second.

(1) Setting the Time Average (AV-T)

The time average function sequentially sums the data values obtained during the time interval (interval control time, timer control time, or real-time control time), and divides by the number of samples. This can be used, for example, while integrating at particular intervals, to output the average of some other measurement value during those intervals.

$$\text{Display value} = \frac{\Sigma Zn}{Nn}$$

Zn: nth measured data
Nn: number of storing during setting time

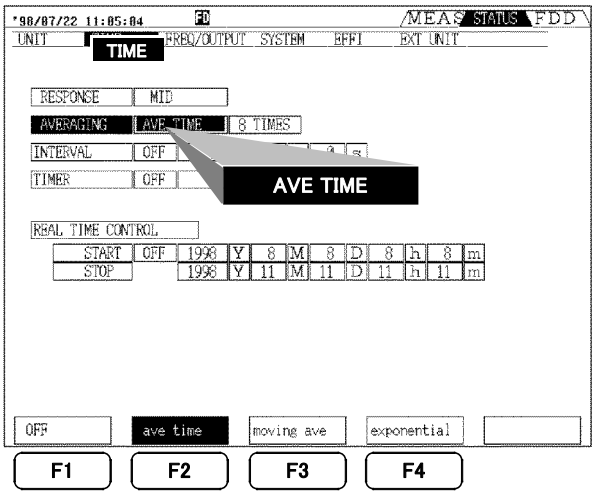

1. Press the **STATUS** key, then use the **PAGE** (◀▶) keys to display the "TIME" (time control) page.
2. Using the **CURSOR** keys, move the cursor to the "AVERAGING" item.
3. Press F2 (ave time).
4. Select desired time setting from interval time, timer time, real control time. See Section 7.2.
5. Press the **MEAS** key to return to the measurement screen. Pressing the **START/STOP** key starts averaging.
6. To return to the normal measurement, release the hold state, because the operation stops in hold state ("HOLD" indicates) when the time averaging is completed. When used together with the interval time, the hold value is the average within the final interval time. To switch display to the total average, press the **HOLD** key. The TOTAL mark appears during display of the total average.
7. To complete forcibly, press the **START/STOP** key again.

NOTE

- The time average requires a setting of an interval control time, timer control time, or real-time control time.
- Operation with the START/STOP key also affects integration. Therefore, after completion of averaging or following forced termination, press the SHIFT key, then press the START/STOP key to reset integration.
- When used in conjunction with a timer control time or real-time control time, when the set time elapses the overall average value is displayed and held, which the unit stops. When this hold state is ended, the unit returns to normal measurement.
- For the time average function, floppy disk and printer settings are also synchronized in the same way.
- During the time average function operation, it is not possible to change settings.
- If an interval control time is set and the **HOLD** key is pressed, the display is updated each time the interval elapses.
- During the averaging operation, if an out-of-range data value is included, the unit indication is red.
- No polarity is shown for time averaging when [TYPE1] is selected as the calculation type for reactive power (Q).

(2) Setting the Moving Average (AV-M)

The moving average function displays a simple average calculated by summing the measurement values from the beginning of averaging, and dividing by the number of samples, until the specified number of samples. From that point on it discards the oldest data value as each new value is added, thus yielding a simple average over the most recent specified number of samples.

$$\text{Display value} = \frac{Z_{(n-N-1)} + Z_{(n-N-2)} + \ldots + Zn}{N}$$

Zn: nth measured data
N: number of setting samples

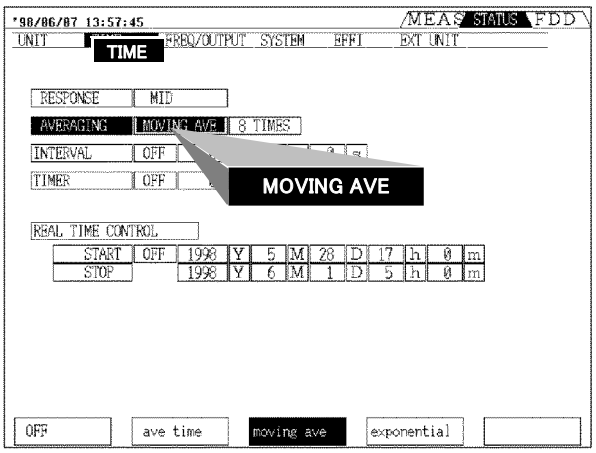

1. Press the **STATUS** key, then use the **PAGE** (◀▶) keys to display the "TIME " (time control) page.
2. Using the **CURSOR** keys, move the cursor to the "AVERAGING" item.
3. Press F3 (Moving ave).

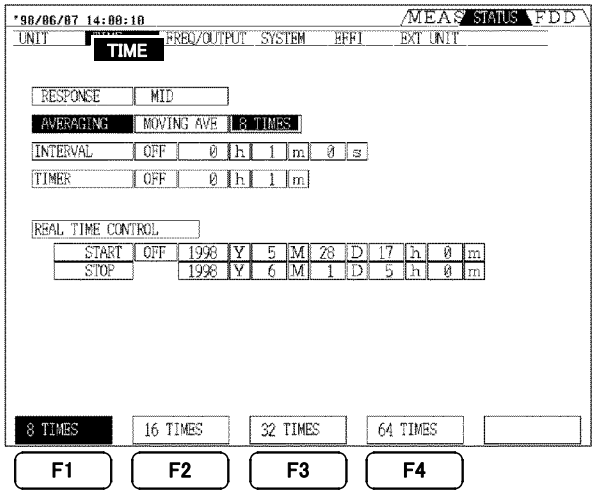

4. Move the cursor to the specified number of sampling item on the right, and set the number of sampling using the function key.
5. Press the **MEAS** key to return to the measurement screen, and averaging starts.

NOTE

This has no connection with any time settings.

(3) Setting the Exponential Average (AV-E)

The exponential average provides a average of the previous values, but weighted toward the latest value. The effect of previous values thus diminishes exponentially.

$$\text{Display value} = \frac{(N-1)\,A_{n-1} + Zn}{N}$$

Zn: nth measured data
A_{n-1}: n-1 th display value
N: constant setting

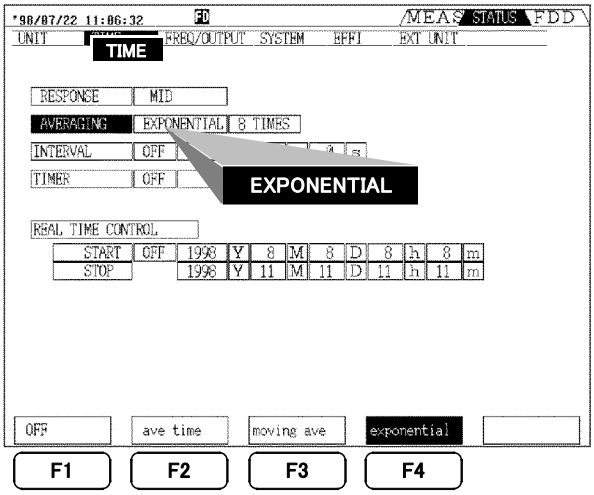

1. Press the **STATUS** key, then use the **PAGE** (◀▶) keys to display the "TIME" (time control) page.
2. Using the **CURSOR** keys, move the cursor to the "AVERAGING" item.
3. Press F3 (Exponential).
4. Move the cursor to the specified number of sampling item on the right, and set the constant value using the function key.
5. Press the **MEAS** key to return to the measurement screen, and averaging starts.

NOTE This has no connection with any time settings.

4.11 Setting on the MEAS Screen

4.11.1 Setting the Display Items (for 1 to 6 channels)

For items on "DETAILS" for each channel screens, it is possible to select which measurement items to display.
It is also possible to select whether to display the power factor (λ) or phase angle (ϕ). On the "MAGNIFY" screen, up to 4 items can be set.

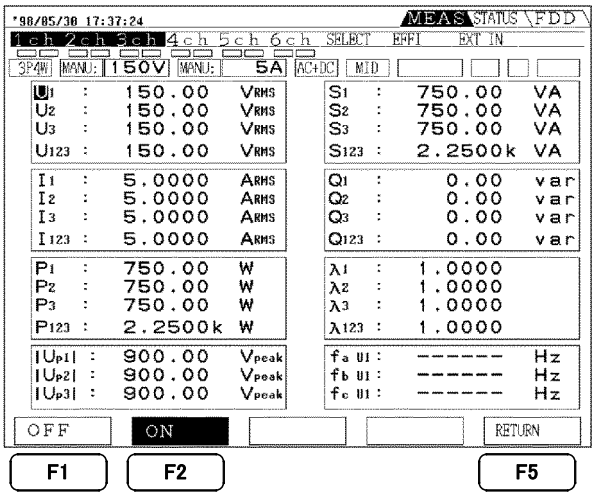

Display item setting for "DETAILS" display

1. Select the screen of the display item to be cleared and press F5 (SELECT).
2. Using the **CURSOR** keys, move the cursor to the desired item.
   To clear the display, press F1 (OFF).
3. Press F5 (RETURN) to return to the measurement screen.

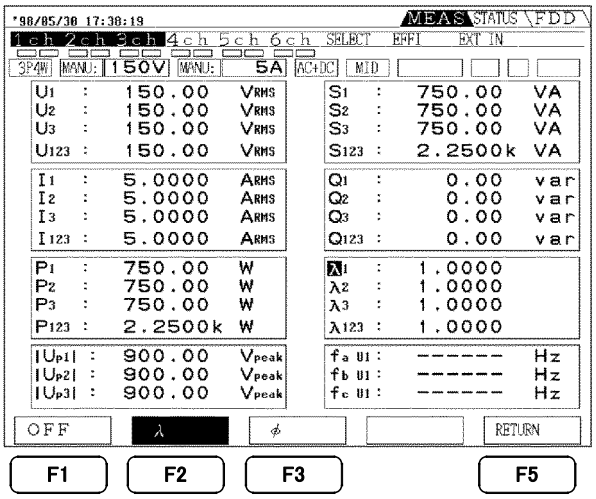

Switching power factor/phase angle

1. Select the screen to switched between power factor or phase angle, and press F5 (SELECT).
2. Using the **CURSOR** keys, move the cursor to the desired item and select from F2 (λ), F3 (ϕ), F1 (OFF).
3. Press F5 (RETURN) to return to the measurement screen.

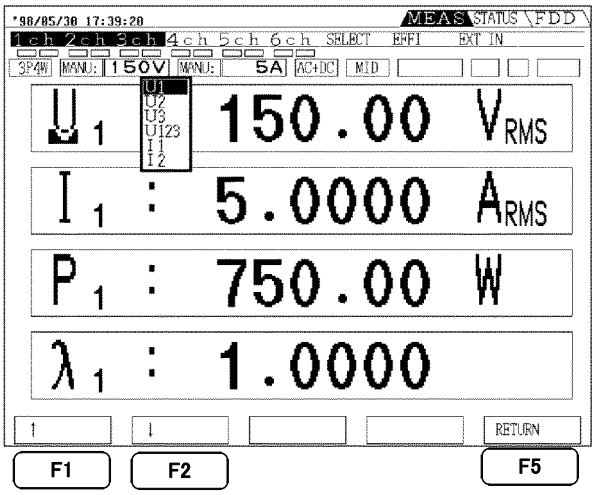

Setting items on "MAGNIFY" display

1. Select the magnification display to be set on channel screen, and press F5 (SELECT).
   The item list which can be selected is displayed.
2. Using the **CURSOR** keys, move the cursor to the desired display and select item from F1 (↑) or F2 (↓) to decide setting.
   To clear the setting display press F2 (OFF).
3. Press F5 (RETURN) to complete settings.

NOTE On the integration display screen, the integration item cannot be set.
On the magnification display, the integration value cannot be selected.

4.11.2 Setting the SELECT screen

This function allows a desired subset of the measurement values to be selected, and displayed together on the screen.
There are three modes: with four, eight, or 16 items displayed. The modes are selected with function keys F1 to F3 .
The following procedure describes how to select a four-item display, and the procedure for eight or 16 items is similar.
The method of setting, see Section 4.11.1, "Setting the Display Item."

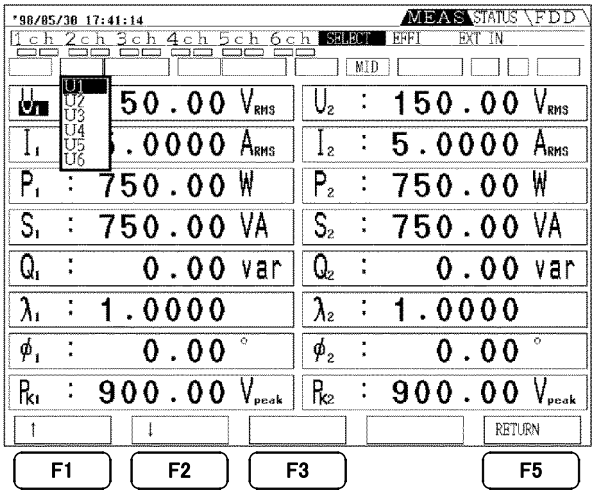

NOTE
- In the SELECT screen, the panel key operations for voltage range, current range, RMS/MEAN selection, and degaussing (DMAG) are disabled. If changes are required, switch to the STATUS "UNIT" display for the relevant channel.
- On the SELECT screen, only response setting can be made. Set for others on the STATUS screen or on the display screen for each channels.
- The integration value can not be selected.

4.12 Setting on the SYSTEM screen

4.12.1 Switching the Interface (GP-IB/RS-232C)

This unit has GP-IB and RS-232C interfaces fitted as standard, and either one can be used as required.

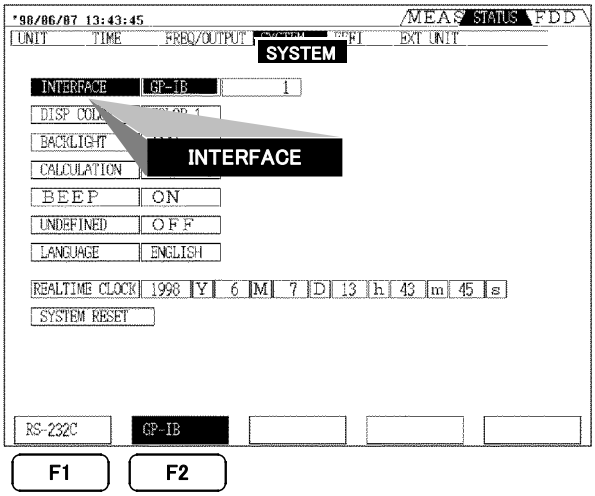

1. Press the **STATUS** key, then use the **PAGE** (◀▶) keys to display the "SYSTEM" page.
2. Using the **CURSOR** keys, move the cursor to the "INTERFACE" item.

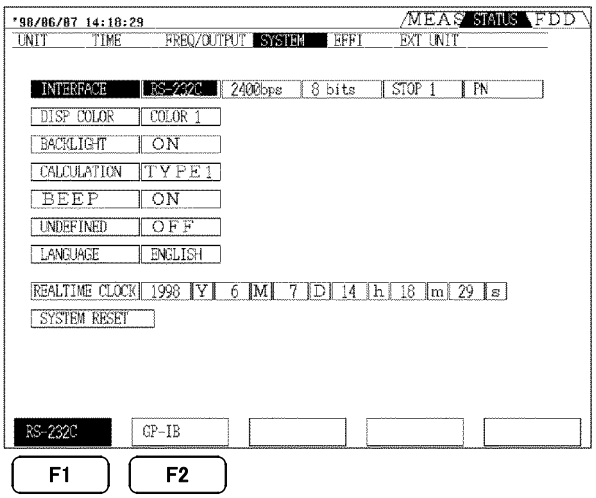

3. Select from F1 (RS-232C) or F2 (GP-IB).
4. When "RS-232C" is selected, set the baud rate (2400/9600 bps), data length (7/8 bits), stop bit (STOP1/STOP2), parity (none; PN/ odd:PODD/ even; PEVEN).
   When "GP-IB" is selected, set address (0 to 30).
5. Press the **MEAS** key to return to the measurement screen.

NOTE

- GP-IB and RS-232C interfaces cannot be set simultaneously.
- For setting the GP-IB and RS-232C, see Chapter 12, "GP-IB and RS-232C Interface."

4.12.2 Setting the Display Color

You can select from four patterns for the screen display colors.

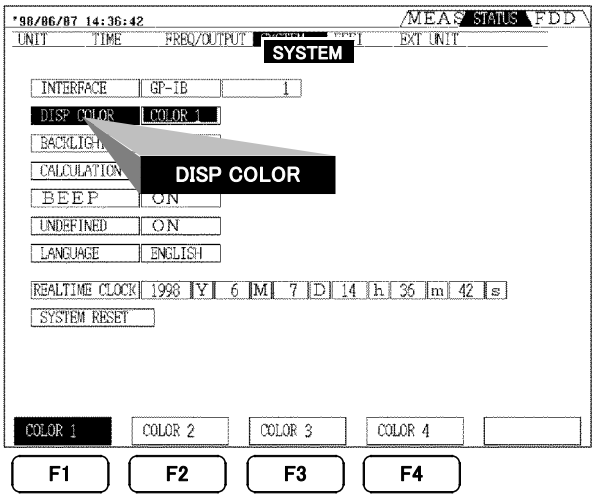

1. Press the **STATUS** key, then use the **PAGE** (◀▶) keys to display the "SYSTEM" page.
2. Using the **CURSOR** keys, move the "DISP COLOR" item.
3. Select color from F1 to F4 .

4.12.3 Setting the Back Light

The backlighting time of the color LCD panel on the unit can be set. In the absence of any key presses, the backlighting goes off automatically after the specified time has elapsed.

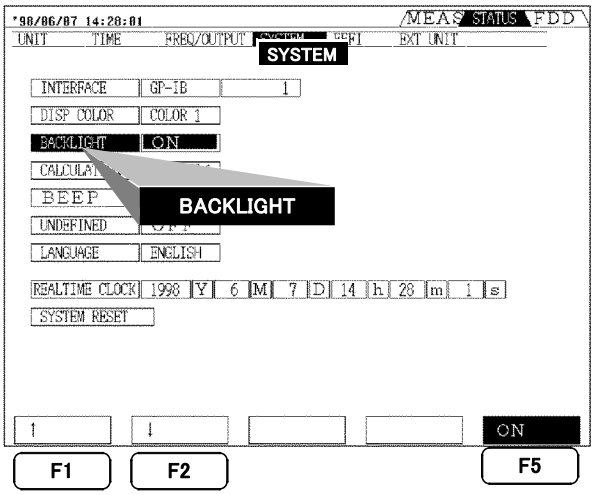

1. Press the **STATUS** key, then use the **PAGE** (◀▶) keys to display the "SYSTEM" page.
2. Using the **CURSOR** keys, move the cursor to the "BACKLIGHT" item.
3. Select from F1 (↑) or F2 (↓).
4. Press the **MEAS** key to return to the measurement screen.

NOTE

- The time can be set to "OFF" (00 minutes), or from 1 to 99 minutes.
- The backlighting lifetime is about 50,000 hours.
- Pressing any key while the backlighting is off turns it on again. This first key press is otherwise ignored.

4.12.4 Setting the Equation for Reactive Power (*Q*) and Apparent Power (*S*)

This unit provides three different internal ways of computing the reactive power and apparent power. Select whichever is appropriate.
See Section 20.3, "Calculations."

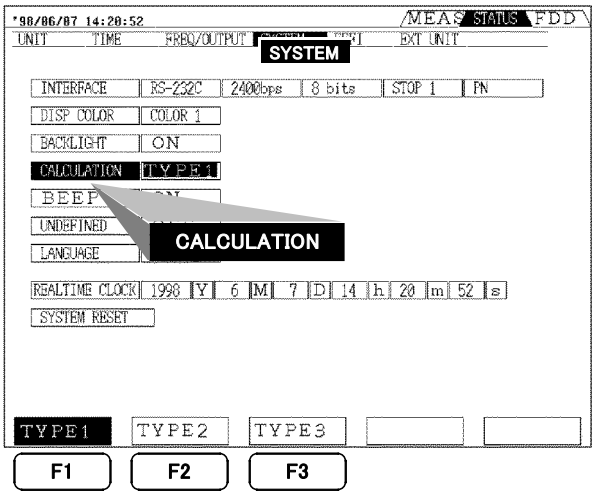

1. Press the **STATUS** key, then use the **PAGE** (◀▶) keys to display the "SYSTEM" page.
2. Using the **CURSOR** keys, move the cursor to the "CALCULATION" item.
3. Select calculation type from F1 (TYPE1), F2 (TYPE2), F3 (TYPE3).
4. Press the **MEAS** key to return to the measurement screen.

NOTE

- For calculation, see Section 20.3, "Calculations"
- In general, use "TYPE1". Select "TYPE2" or "TYPE3" when required for compatibility with previous models.
- The values yielded by the different methods of calculation coincide when the input is a sine wave on a balanced line, but may be different when there is distortion present or unbalanced line.
- When "TYPE1" is selected, the reactive power calculation for 1P3W and above includes the lead/lag of the current with respect to the voltage. The detection of the sign of this lead or lag is carried out by zero-crossing detection on the voltage and current waveforms by the input units. For this reason, stable measurement may not be possible when the waveforms are distorted. In such cases, use a phase polarity discrimination filter (phF) in addition. See Section 4.7.
- The power factor and phase angle are also derived from the selected calculation result.
- If [TYPE1] is selected as the calculation tpe while using averaging (time averaging, moving averaging, or indexed averaging), the "si" and "su" polarities for each channel are calculated as +1.

4.12.5 Setting the Beep Sound

This unit sounds a "beep" each time a key is pressed.

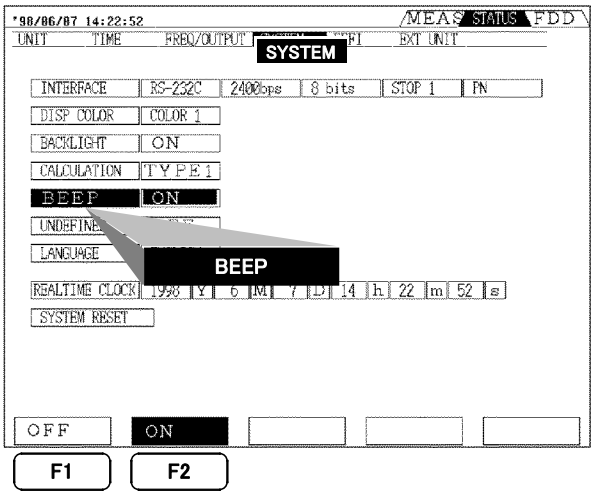

1. Press the **STATUS** key, then use the **PAGE** (◀▶) keys to display the "SYSTEM" page.
2. Using the **CURSOR** keys, move the cursor to the "BEEP" item.
3. Select from F1 (OFF) or F2 (ON).
4. Press the **MEAS** key to return to the measurement screen.

NOTE When an error occurs, the beep sounds, irrespective of this setting.

4.12.6 Setting Indications for Out-of-Range Inputs

This functions selects whether or not the numerical values appear in a different color when outside the set range.

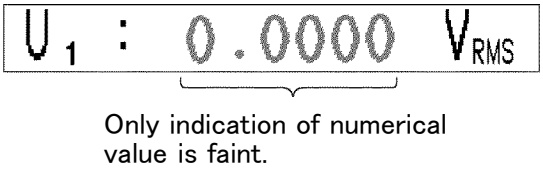

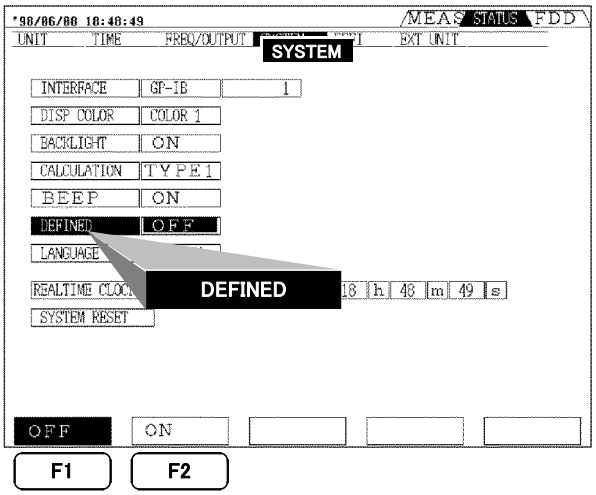

1. Press the **STATUS** key, then use the **PAGE** (◀▶) keys to display the "SYSTEM" page.
2. Using the **CURSOR** keys, move the "DEFINED" item.
3. Press F1 (OFF) or F2 (ON).

NOTE

- For the out of range input, see the specifications of each input units.
- An active power value is treated as out of range when either of the voltage and current values is out of range.
- A reactive power (Q), apparent power (S), power factor (λ), or phase angle (ϕ) value is treated as out of range when either of the voltage (U), current (I), power (P) values is out of range.

4.12.7 Setting the Display Language (English/Japanese)

Display messages can be selected to appear in either Japanese or English.

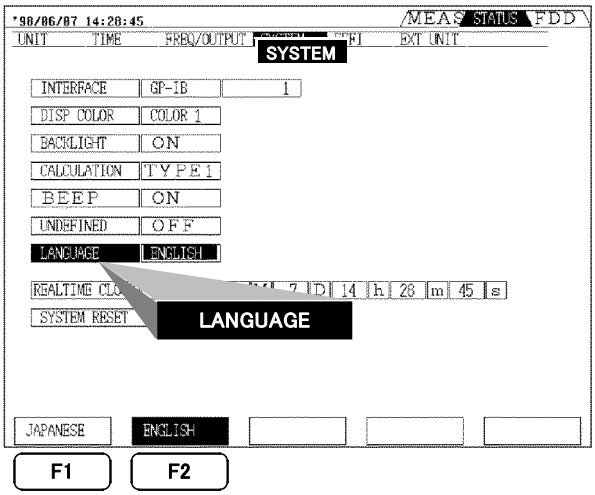

1. Press the **STATUS** key, then use the **PAGE** (◀▶) keys to display the "SYSTEM " page.
2. Using the **CURSOR** keys, move the cursor to the "LANGUAGE" item.
3. Select from F1 (JAPANESE) or F2 (ENGLISH).
4. Press the **MEAS** key to return to the measurement screen.

Instead of above procedure, hold down the STATUS key and turn the power on, the display in English appears.

4.12.8 Setting the Real-time Clock

This sets the internal real-time clock.

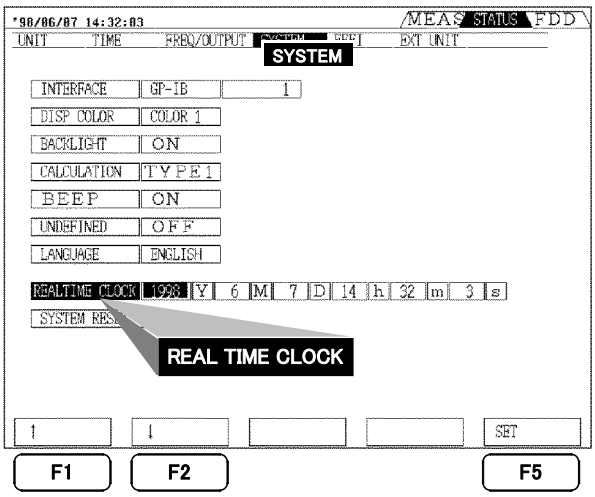

1. Press the **STATUS** key, then use the **PAGE** (◀▶) keys to display the "SYSTEM" page.
2. Using the **CURSOR** keys, move the cursor to the digit to be set on the right of the "REALTIME CLOCK" item.
3. Set the time using F1 (↑) or F2 (↓).
   The settings are completed after the time is set.
4. Press F5 (SET) to end setting.

NOTE

- The clock uses 24-hour time.
- Support until 2078.
- If F5 (SET) is not pressed after time is set, the setting time after powering off is returned to the previous setting.

4.13 Degaussing

When a large DC current or large transient current is measured with the 9600 AC/DC DIRECT INPUT UNIT or an AC/DC type of current sensor for the 9602 AC/DC CLAMP INPUT UNIT, the internal DC-CT may become magnetized, thus outputting an offset even for a zero input. Use the degaussing function if this occurs, and also before measurement after warming-up.

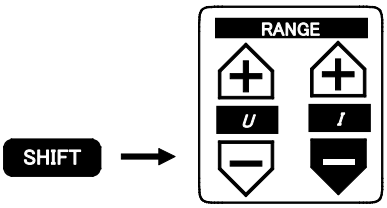

1. Display the channel screen for which degaussing is desired.
2. Press the **SHIFT** key once, then press the current range – key.
3. A degaussing message appears on the screen. "Will now degauss"
   Pressing F1 (YES) starts degaussing, and F2 (NO) does not degauss and the message goes off.
4. The degaussing operation is completed in about 10 seconds.

NOTE

- Carry out degaussing when the input current is zero.
- This function is not available for AC direct input units and AC current sensors.
- The specification accuracy applies only after degaussing.
- The degaussing function operates once after powering on.
- For channel combinations of 1P3W and above, degaussing takes place simultaneously for all channels in the combination.
- In extreme cases, for example, when there is an input of the maximum input current or above, complete degaussing may not be possible. In this case, power the unit off and on again.

Chapter 5
Frequency Measurement

This unit has internal circuits for three frequency measurement channels (fa, fb, fc), and can thus measure a number of systems simultaneously.
The frequency ranges can be combined with high-pass filters (HPF) and low-pass filters (LPF)

NOTE

- Depending on the frequency range and the frequency and distortion of the waveform, stable measurement may not be possible.
  In that case, set the range manually.
- The frequency effective measurement range is within the range of frequency characteristics of combination input unit.
- When using the 9603 EXTERNAL SIGNAL INPUT UNIT you select pulse measurement, this is unconditionally assigned to the 9603 unit. For details see Chapter 17, "9603 EXTERNAL SIGNAL INPUT UNIT."
  (9603 has no HPF and LPF)

Range	500.00 mHz to 50.000 Hz	20.00 Hz to 500.00 Hz	200.00 Hz to 5.0000 kHz	2.0000 kHz to 50.000 kHz	20.000 kHz to 2.0000 MHz
HPF	0.5 Hz		100 Hz		10 kHz
LPF	360 Hz		50 kHz		1.2 MHz

The frequency measurement data is displayed on the lower right of the "DETAILS" page on each channel screen

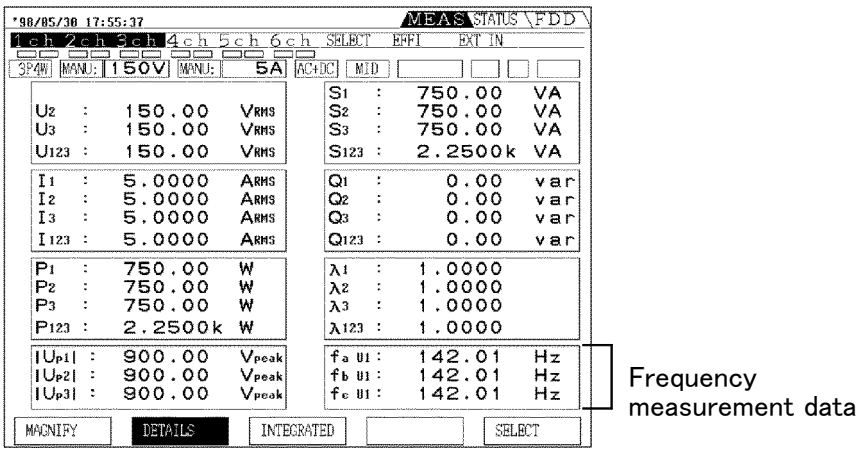

5.1 Setting the Frequency Measurement Source (fa)

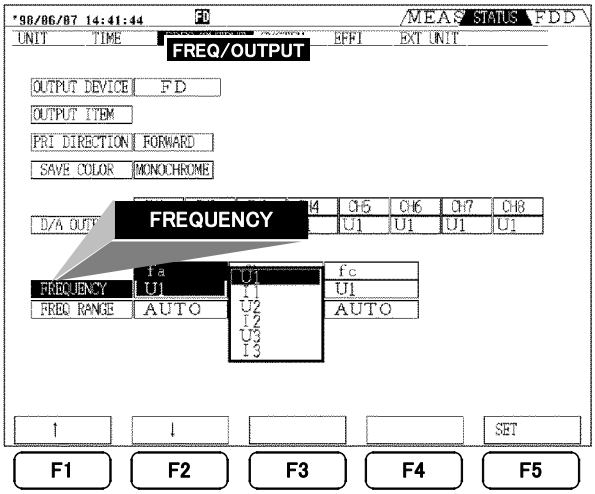

1. Press the **STATUS** key, then use the **PAGE** key to display the "FREQ/OUTPUT" page.
2. Using the **CURSOR** keys, move the cursor to the source item of "fa", and the window of settable source opens.
3. Press F1 (↑) and F2 (↓) to move the cursor to desired source item, and press F5 (SET).

For fb, fc, same method

NOTE

- After settings are completed, always press F5 (SET).
- By setting fa to "U1" and fb to "I1", for example, it is not possible to simultaneously measure the voltage and current waveforms from a single input unit.

5.2 Setting the Frequency Range(fa)

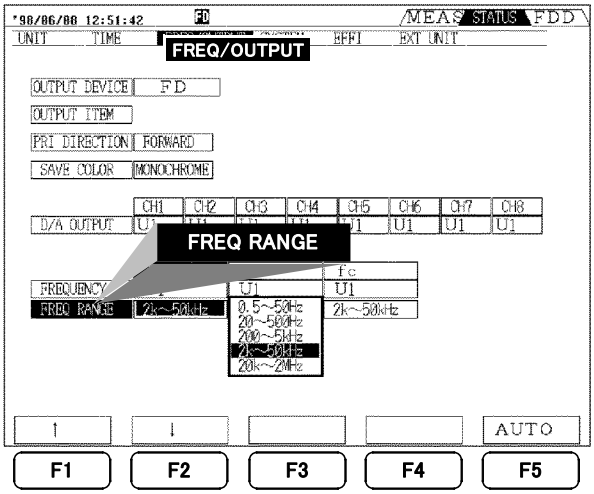

1. Using the **CURSOR** keys, move the cursor to the frequency range item of "fa", and the window of frequency range opens.
2. Press F1 (↑) and F2 (↓) to display the desired range.

   0.5 Hz to 50 Hz ⇔ 20 Hz to 500 Hz ⇔ 200 H to 5 kHz ⇔ 2 kHz to 50 kHz ⇔ 20 kHz to 2 MHz

Sets fb and fc in the same way.

NOTE

If the measurement is not possible, the following error is displayed.
When the input is out of setting frequency range: "o.r."
When it is in AUTO range: "-----"

Chapter 6
Hold/Peak Hold Function

6.1 Hold Function

Pressing the panel **HOLD** key freezes the display values of all items. By switching from one screen to another it is possible to compare different simultaneously captured values.
Since internally the measurement continues, each time you press the **HOLD** key the values at that time are displayed. To end the hold function, hold down the **SHIFT** key and press the **HOLD** key.

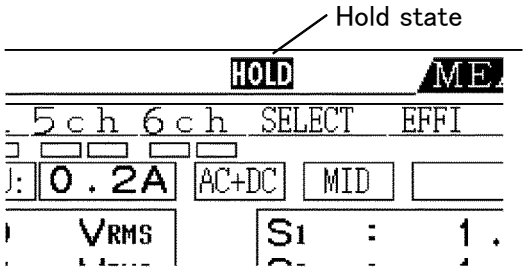

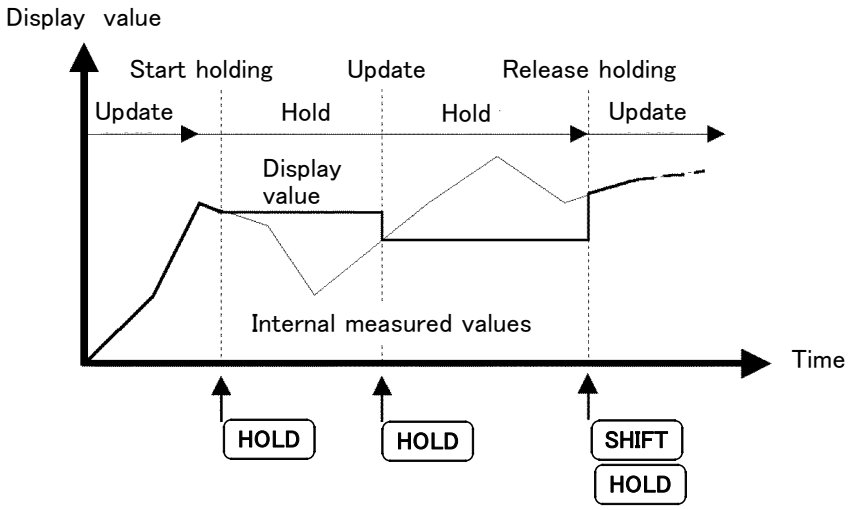

NOTE

- In the hold state, it is not possible to change settings.
- In the auto-ranging, the range when the **HOLD** key is pressed is fixed.
- In the hold state, external output values (for floppy disk or printer, through the GP-IB or RS-232C interface, or D/A output) are the values displayed on the screen. When combined with the interval timer, the display is updated at the specified interval. In this case the previous value is held until the next interval time.
- For timer and real-time control, the display is updated at the stop time, and then held.
- The HOLD key operates at any time, including prior to and during timer operation.

Combination with external control signal

When the unit is in the held state, the display can be held or updated using an external control signal to the EXT. A/D START terminal of the OUT (ANALOG WAVE D/A), EXT. CONT connector on the rear panel.

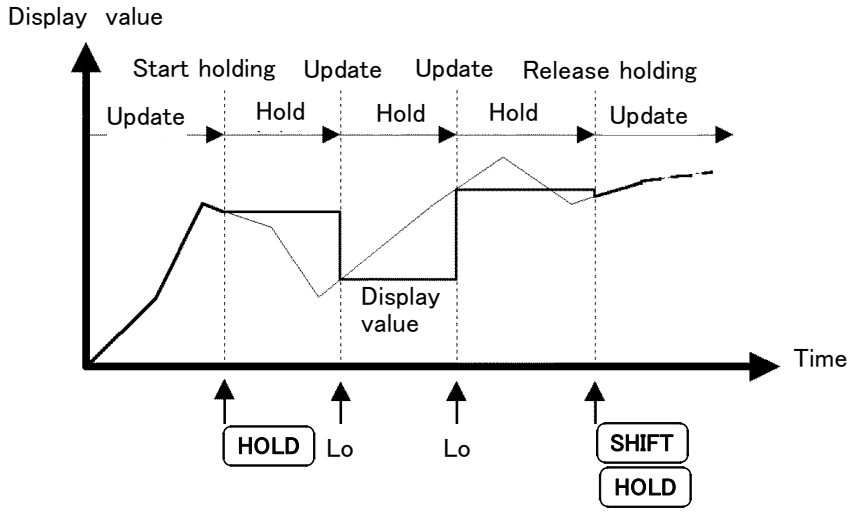

6.2 Peak Hold Function

When the peak hold function is activated, only items exceeding the previous maximum value are updated continuously. For example, this can be used for measuring transient currents in an electric motor.

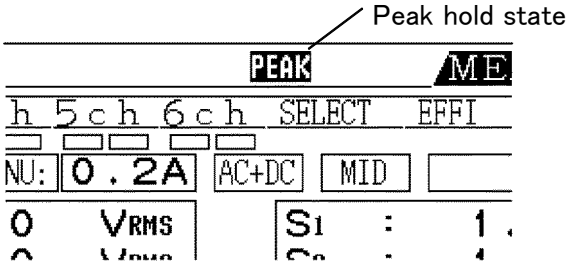

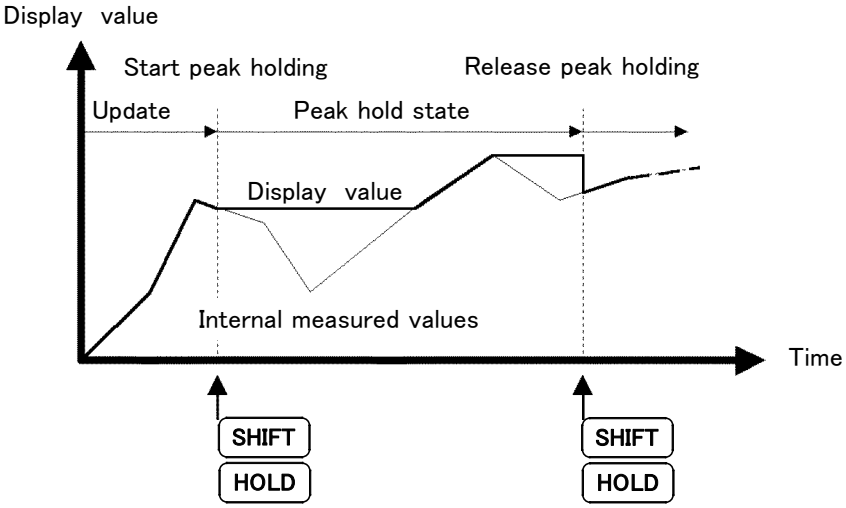

To activate or deactivate this function, press the **SHIFT** key and then press the **HOLD** key. When the peak hold function is activated, pressing the **HOLD** key resets the peak value, and starts a new peak hold operation from that point.

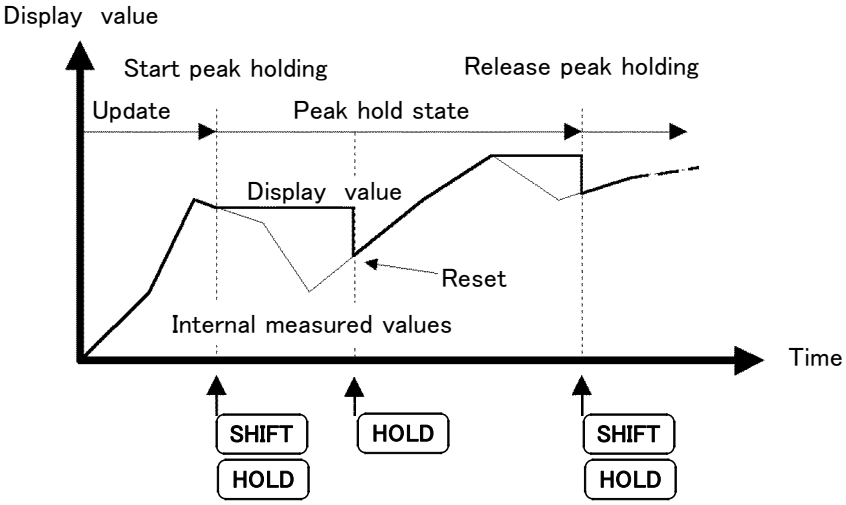

NOTE

- If the display value is out of range, the indication "o.r." appears. In this case, first stop the peak hold function, then change the range.
- The maximum value refers to the maximum absolute value. For example, after an input of "+50 W", an input of "-60 W" causes the display to be updated, because the absolute value of "-60 W" is greater.
- In the peak hold state, it is not possible to change settings.
- In the peak hold state, external output values (for floppy disk or printer, through the GP-IB or RS-232C interface, or D/A output) are the values displayed on the screen.

6.2.1 Combination with Control Times

When an interval time is set, the maximum value within each interval can be measured. When a timer time or real-time control time is set, the maximum value from the start time to the stop time is found, and then the unit stops.

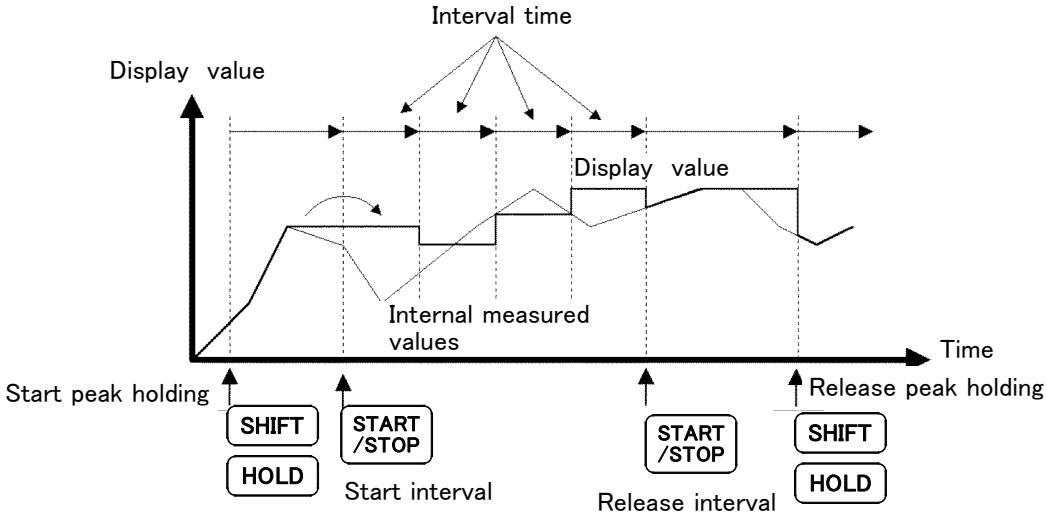

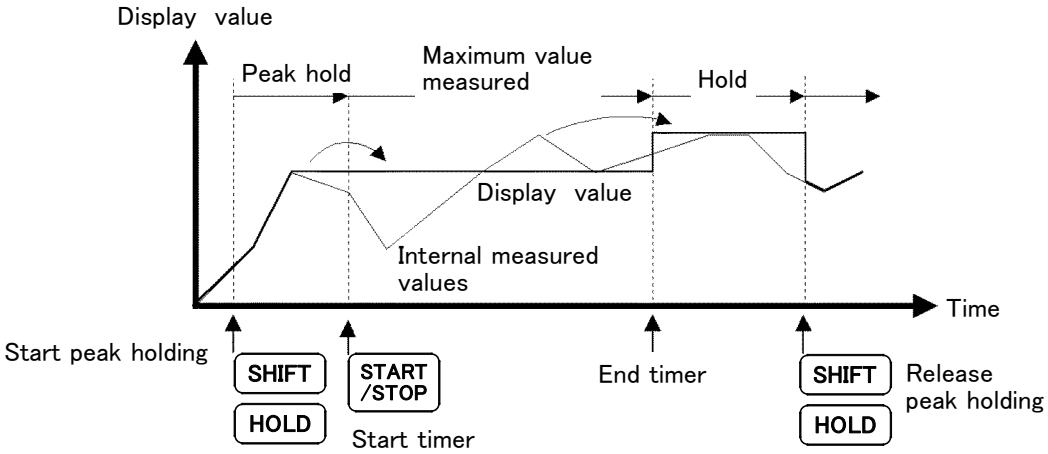

NOTE

- The peak hold function can be activated either before the time setting is made, or after the time has started. However, if after the time has started, the maximum value is only found from the time after the peak hold function is activated.
- The time of occurrence of the maximum value is not shown.

Chapter 7
Integration Function

7.1 Overview

For a 1P2W system in DC mode, the integration function in this unit can simultaneously integrate positive, negative, and total values for current (*I*) and active power (*P*) for all channels. There are six ways of controlling integration by the various time settings, as listed below. All of these ways can be combined with the floppy disk drive and printer.
Load factor (*LF*) calculation is also possible using the interval timer.

1. Manual integration
2. Interval integration
3. Timer control integration
4. Timer + interval integration
5. Real time integration
6. Real time + interval integration

NOTE

- Because of the internal circuit design, the maximum integration time is 10,000 hours, and the integration automatically stops if this time elapses.
- Start, stop, and reset control of integration by either a panel operation or the external control connector applies simultaneously to all items being integrated. However, the GP-IB or RS-232C interface provides separate control for each channel. For details see Chapter 12, "GP-IB and RS-232C Interface."
- The items which can be integrated depend on the connection mode and coupling mode as shown in the following table.

Mode	Display items
1P2W, DC	+Ih, −Ih, Ih, +WP, −WP, WP, LF
1P2W	Ih, +WP, −WP, WP, LF
1P3W, 3P3W (When using channels 1, 2)	Ih1, Ih2, +WP12, −WP12, WP12, LF12
3V3A, 3P4W (When using channels 1, 2, 3)	Ih1, Ih2, Ih3, +WP123, −WP123, WP123, LF123

NOTE

- Data for each interval of the interval time setting is displayed on the screen in hold state. When the value is not held, it must be combined with the floppy disk drive or printer function to display.
- Calculation results (DC voltage) from the various input units are integrated at the rate of 64 samples per second. Therefore, integration results may vary with instruments that use different response speeds, sampling rates or calculation methods.
- During integration operation, if the integration item is "o.r" (out-of-range), the value of 130% of range is integrated. In this case, the integration value indication is red.
- In the DC mode, current is integrated from instantaneous current waveforms. In the AC+DC/AC mode, it is integrated as RMS or MEAN values.
- In the DC mode, power is integrated from instantaneous power waveforms. In the AC+DC/AC mode, it is integrated as effective power.
- Once integration starts, items for which auto ranging is set have their ranges fixed from the start time. Set the range so that it will not be exceeded before beginning integration.
- During integration (even "on standby" under real-time control), all settings except changing screens and the hold and peak hold functions are disabled.
- While the hold function is activated, the display is frozen, but internally the integration continues normally. When the floppy disk drive or D/A outputs are used, however, the held values continue to be output.
- While the peak hold function is activated, the integration operation is not affected.
- After integration ends, until the integration values are reset, it is not possible to change settings.
- The calculation results (for DC voltage) from each input units are integrated 64 times per second.

Operation Procedure

1. Set the required time settings (interval, timer, or real-time control).
   For the manual integration, make the time settings to OFF, however, the timer time operates as 10000 hours.
2. Set the external output for FDD, printer, D/A if necessary.
   See Chapter 10, Chapter 11, Chapter 13
3. Start integration.
   Press the START/STOP key.

7.2 Setting the Control Time

Using the three time control functions provided by this unit, it is possible to control time averaging, the floppy disk drive, printer, and integration functions.

NOTE

- It is not possible to make separate settings for time averaging, floppy disk drive, printer, and integration functions.
- The integration function always operates. Therefore, even when the integration value is not being measured, during the operation period of time control, the "INTEG" indication appears. After end of time control, reset (**SHIFT** → **START/STOP**) to turn off the "INTEG" display.
- When using time averaging integration, some settings are disabled. If auto ranging is set, the range is fixed at the start time. The HOLD function, however, can still be used.
- Even when time settings are made, the unit does not operate until the panel **START/STOP** key is pressed.
- The operation starts by real-time control and it is completed by timer control. In this case, the stop time by real-time control is ignored.

7

7.2.1 Setting the Interval Time

Interval control operates the unit repeatedly at the specified interval.

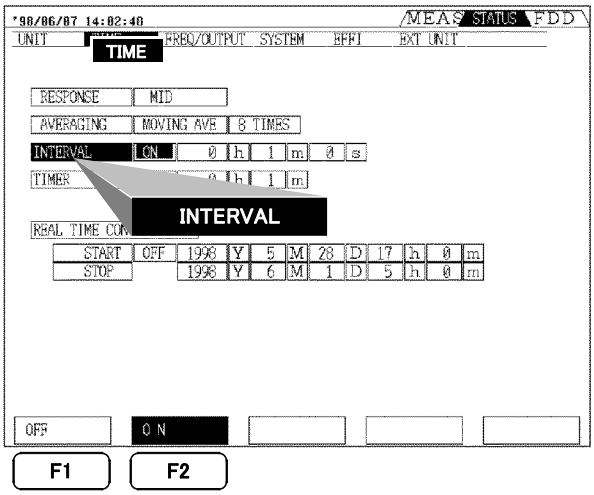

1. Press the **STATUS** key, then use the **PAGE** (◀▶) keys to display the "TIME" (time control) page.
2. Using the **CURSOR** keys, move the cursor to the "INTERVAL" and press F2 to set to ON.

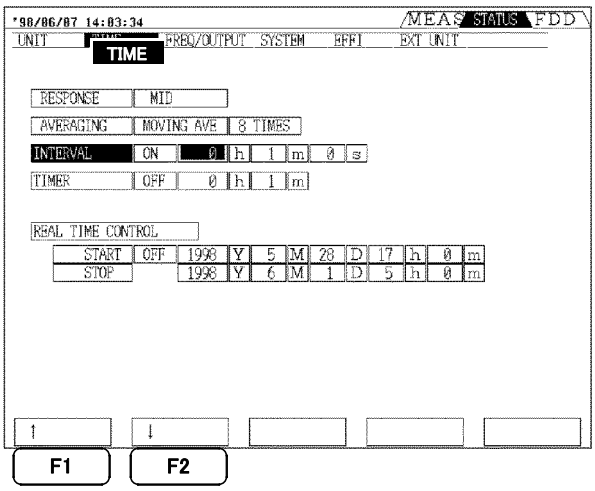

3. Move the cursor to desired time digit, and set the time using the F1 (↑) and F2 (↓).
4. After setting completed, press the **MEAS** key to return to the measurement screen.
5. Press the **START/STOP** key to start operation.

NOTE

- The interval setting is in steps of 10 seconds, to a maximum of 100 hours 00 minutes 00 seconds.
- Even when operated without the timer or real-time control time set, the timer operates at 10,000 hours. For this reason, once 10,000 hours have elapsed, pressing the **START/STOP** key does not operate the unit.
  In this case, press the **SHIFT** and **START/STOP** keys to reset.
- If the interval timer setting is longer than the time set by the timer or real-time control function start/stop setting, then the interval setting has no effect.
- If the timing at which timer or real-time control ends does not coincide with the timing of the interval timer, the timing of timer or real-time control takes precedence and the unit stops.
- When operating in conjunction with the floppy disk drive, or printer, the minimum setting of the interval timer changes, according to the amount of data being written. See Chapter 11, "Using the Floppy Disk Drive.",Chapter 13, "Using the Printer (Option)."

7.2.2 Setting the Timer

Timer control provides a single time interval. This can also be used in combination with the interval time, to subdivide the timer time.

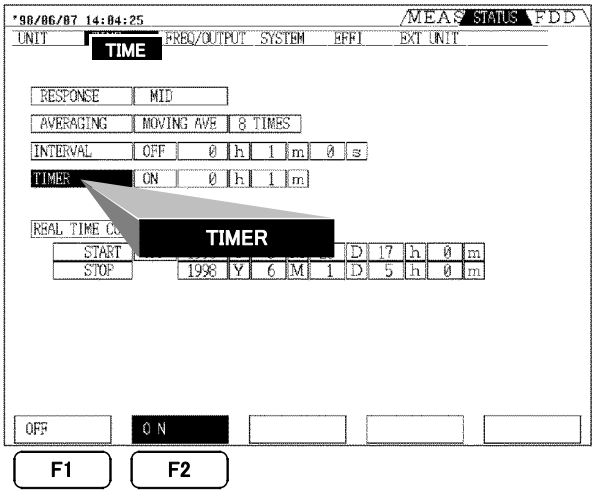

1. Set the timer time in the same way of the interval time setting.
2. Press the **MEAS** key to return to the measurement screen.
3. Press the **START/STOP** key to start operation and stop automatically the control after timer time. During operation, "INTEG" is displayed.
4. To stop operation, press the **START/STOP** key again.

NOTE

- The timer time setting is in steps of 1 minute, to a maximum of 10000 hours.
- Even if the real-time control function is enabled, The operation starts by start time, and it is completed by timer control. In this case, the stop time is ignored.

7.2.3 Setting the Real Time Control

Using the real-time control function, the internal real-time clock in the unit can be used to start and stop operation at specified times. This can also be used in combination with the interval time, to subdivide the time specified by real-time control.

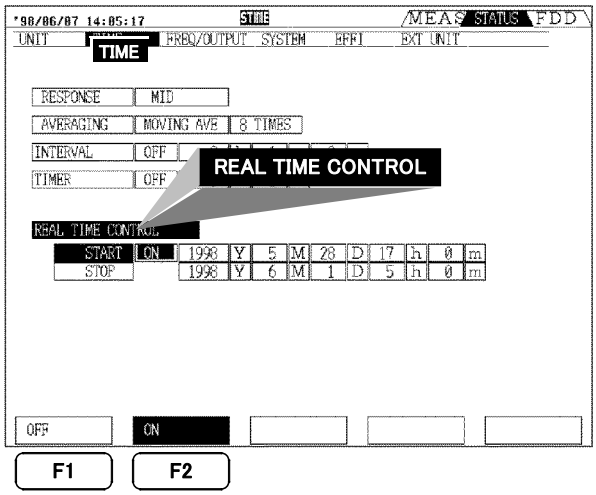

1. Set the start and stop time of the real time control time in the same way of the interval time setting.
2. Press the **MEAS** key to return to the measurement screen.
3. Press the **START/STOP** key, "INTEG" and "STIME" are displayed.
   Once the set stop time is reached, operation automatically stops.
4. To stop operation during controlling, press the **START/STOP** key again.

NOTE

- The time setting is in steps of 1 minute.
- The time is specified with a four-digit year, and 24-hour times.
- If a time point has already passed, the real-time control is ignored.
- If it stops operation during control, the real-time control is forcibly ignored.
- Even if the real-time control function is enabled, The operation starts by start time, and it is completed by timer control. In this case, the stop time is ignored.

7

7.3 Integration Screen

On each channel screen, pressing the F3 (INTEGRATED) function key moves to integration screen.

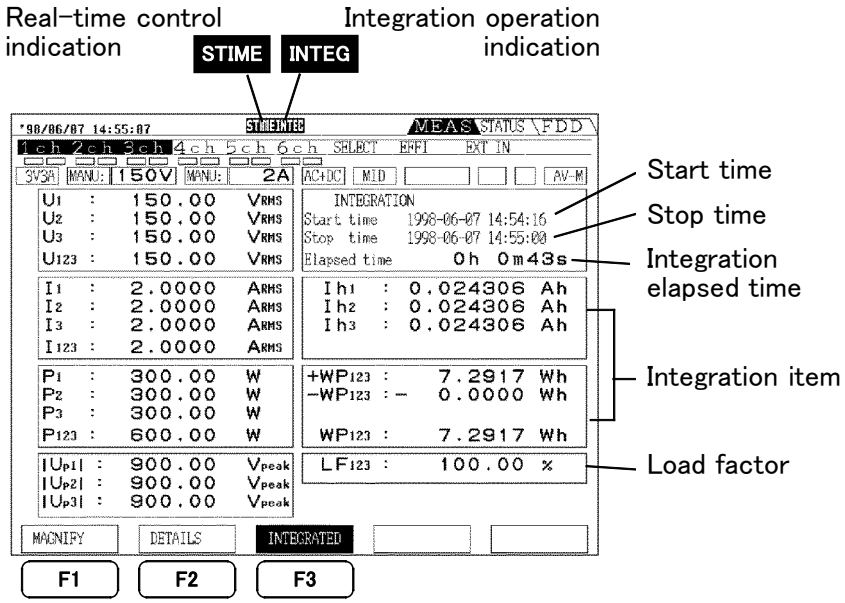

INTEG During integration, this display is shown in yellow.
When integration end or during waiting integration, it is shown in blue.

STIME Operates by real time control.
During operation, it is shown in yellow.

7.4 Starting, Stopping, and Resetting the Integration

There are three ways of starting, stopping, resetting integration, as shown below. These controls operate whether or not the integration screen is displayed.

Panel key control

Start Starts integration by pressing the START/STOP key.

Stop Stops integration by pressing the START/STOP key during integration.

Reset Resets integration value by pressing the START/STOP key after integration completed.

External control by the terminal

The operation by the panel key can be also controlled by the external control terminal.
For details, see Chapter 9, "External Output/ External Control Terminals."

GP-IB/RS-232C control

Control is possible in the same way as with the panel keys. When measuring a number of systems, separate control is also possible.
Refer to Chapter 12, "GP-IB and RS-232C Interface."

7.5 Manual Integration (Controlled by Panel Keys)

Manual integration continues from the time that integration is started until any later point when it is stopped.

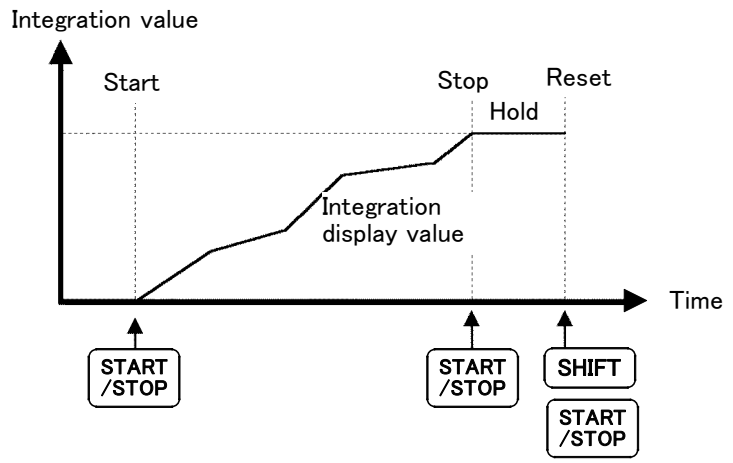

1. Select the channel and item to be integrated.
2. If an interval, timer, or real-time control time is set, switch it off.
   See section 7.2, "Setting the Control Time."
3. Press the **START/STOP** key to start integration. "INTEG" (yellow) is indicated.
4. After the required time has elapsed, press the **START/STOP** key to end the integration. "INTEG" (blue) is indicated.
5. To continue with cumulative integration, press the **START/STOP** key again. "INTEG" (yellow) is indicated.
6. To reset the integration value, press the **SHIFT** key and then **START/STOP** key "INTEG" goes off.

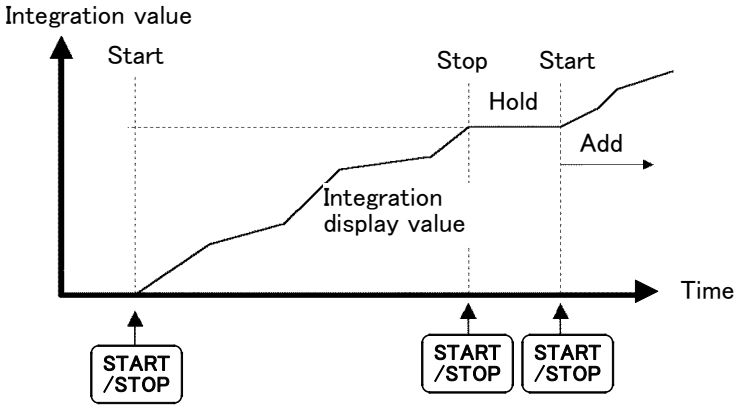

NOTE

- If an interval, timer, or real-time control time is set, manual integration is not possible.
- Because of the internal circuit design, the maximum integration time is 10,000 hours.
- If the FDD output or printer output is set, these operate when the **START/STOP** key is pressed. If not necessary, set to "OFF".
- While the hold function is activated, the display is frozen, but internally the integration continues normally. When the floppy disk drive, printer, or D/A outputs are used, however, the held values continue to be output.

7.6 Integration Using Time Settings (Controlled by Panel Keys)

By first setting the interval, timer, or real-time control time, and then pressing the **START/STOP** key, integration can be carried out for the specified time.

NOTE

- When the interval time is set, data for each interval of the interval time setting is not displayed on the screen. This must be combined with the floppy disk drive (only 3193) or (optional) printer function.
- If the timer (or real-time control) end timing does not coincide with the interval timer timing, then the integration ends with the timer (or real-time control) end timing, and the last interval timing is ignored.
- While the hold function is activated by pressing the **HOLD** key, and when the interval time is set, the display is updated every interval time. When the timer time or real control time is set, the final data is displayed at the end of setting time.

7.6.1 Timer Integration

After integrating for the time specified the unit automatically stops. In this case the integration result is held.
When the interval time is set, for each interval specified the total integration value at that point is written to the floppy disk or printer.

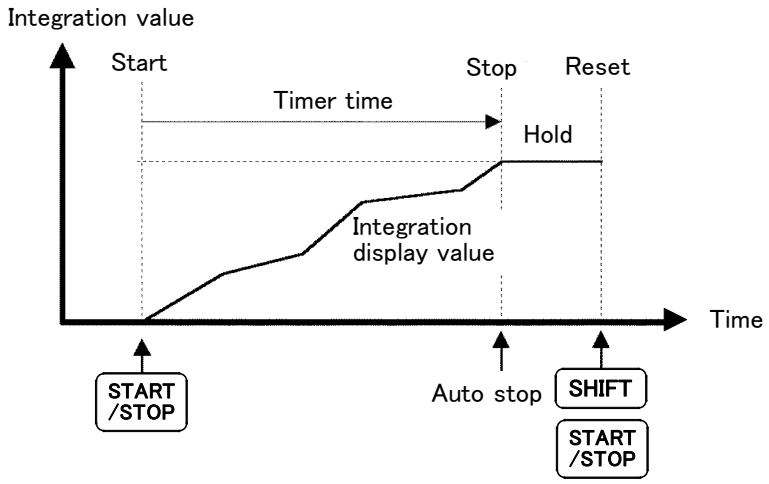

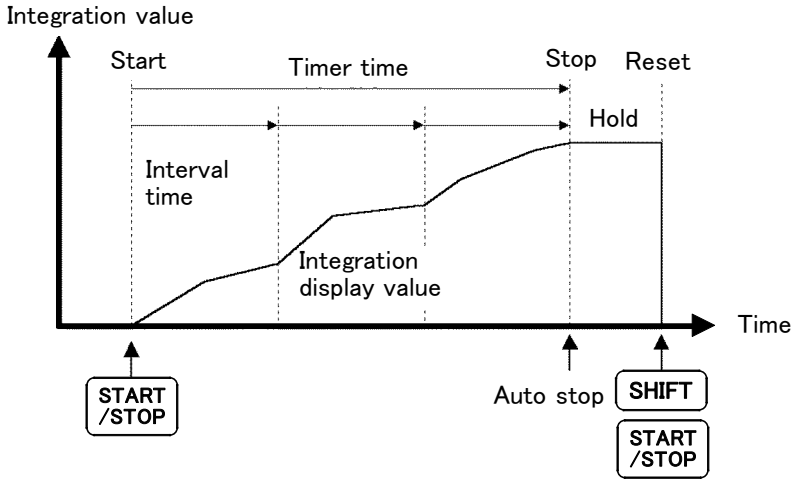

7.6.2 Real-Time Control Integration

Integration starts automatically at the start time of the real-time control time, and stops at the stop time.
When the interval time is set, for each interval specified the total integration value at that point is written to the floppy disk or printer.

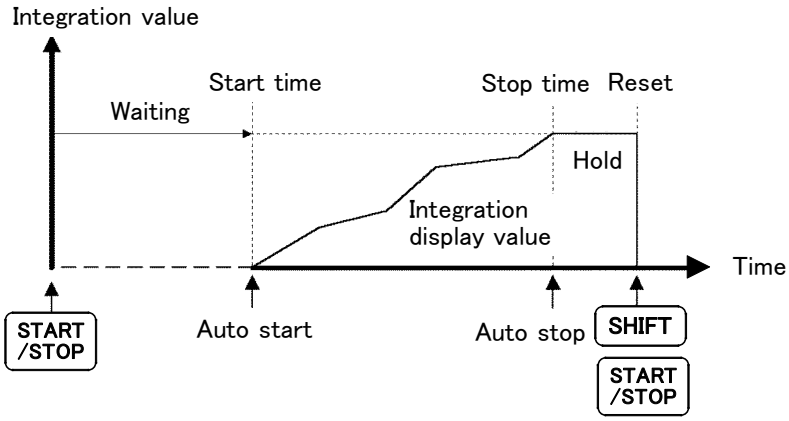

7.6.3 Interval Integration

The integration calculation is that in the case that only the interval time is set, and is the same as in the case that the timer time is set to 10,000 hours.

7.7 Measuring the Load Factor

When the timer or real-time control time setting is combined with the interval time, the load factor (*LF*) can be measured. The load factor result appears in the integration display.

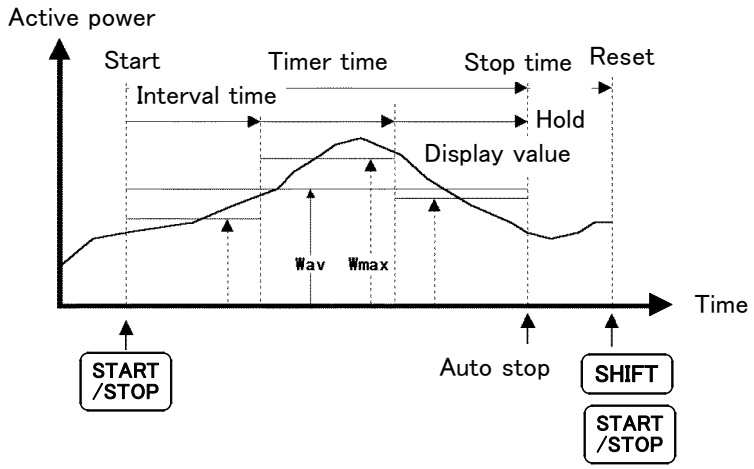

1. Set the interval time, and timer time or real time control time.
   See Section 7.2, "Setting the Control Time."
2. Press the **START/STOP** key to start.
   During operating, the load factor up to that point is shown.
3. To reset the measured value, press the **SHIFT** key and then press the **START/STOP** key. ("-----" is displayed.)

$$\text{Load factor } (LF) = \frac{Wav}{Wmax} \times 100\%$$

*W*av : Total averaging
*W*max : Maximum value of averaging for interval

$$Wav = \frac{\text{Total integration value (+)}}{\text{Timer time or real-time control time}}$$

$$Wmax = \frac{\text{Maximum value of integration value for interval}}{\text{Interval time}}$$

NOTE

- The load factor is calculated from the positive value integration only. Therefore, the load factor does not match the normal average. The negative integration value is also taken as zero.
- On the screen, the load factor only is displayed.
- If no interval time is set, the load factor is not displayed.
- When combined with the floppy disk drive or printer, the maximum average power (Wmax) and load factor (LF) recorded during operation for each interval are output.
- This function can operate simultaneously with integration.
- Once load factor measurement starts, items for which auto ranging is set have their ranges fixed from the start time. Set the range so that it will not be exceeded before beginning load factor measurement.
- During load factor measurement (even "on standby" under real-time control), all settings except changing screens are disabled.
- After load factor measurement ends, until reset, it is not possible to change settings.
- When combined with a timer setting, after the timer period has elapsed, if the process is started again the load factor is calculated including the data for the previous timer period.

7.8 Zero suppress function

You can set the minimum value of data to be integrated. You can change the value if the input level is too low for the preset range.

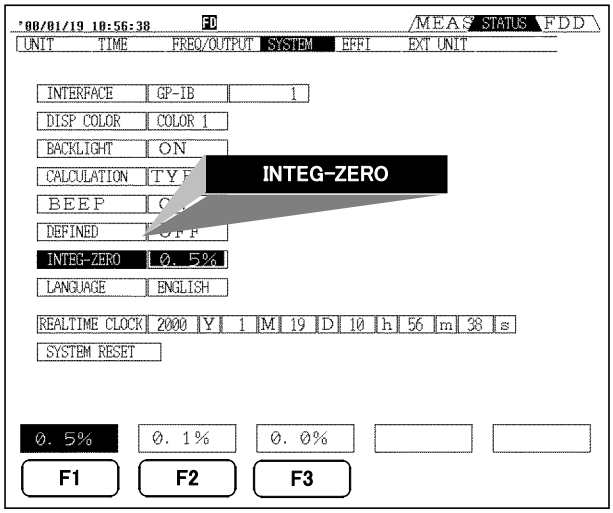

1. Press the **STATUS** key, then use the **PAGE** (◀▶) keys to display the "SYSTEM" page.
2. Using the **CURSOR** keys, move the cursor to the "INTEG-ZERO" item.
3. Select from F1 (0.5%), F2 (0.1%), F3 (0.0%).
4. Press the **MEAS** key to return to the measurement screen.

NOTE

- In zero suppress, figures less than the percentage set for the full range are regarded as "0".
- The setting is 0.5% by default.
- When the setting is at 0.0% or 0.1%, the values not displayed as instantaneous values will also be counted. Counts may be displayed even when there is no input due to internal off-set.
- This change function is not transferred when data is saved or loaded via PC communications or floppy disk. Therefore, settings must be made manually before measurement.
- The zero suppress in the display of instantaneous values is not changed.

Chapter 8
Efficiency Measurement

8.1 Overview

This unit can calculate the efficiency from the measured values (active power, motor power). For example, the input/output efficiency of an inverter, input/output efficiency of a motor, and overall efficiency can be calculated simultaneously with a single unit.

NOTE

- Measuring the motor power (*P*m) requires the optional 9603 EXTERNAL SIGNAL INPUT UNIT.
- If the load is subject to violent fluctuations or transients, stable measurement may not be possible.
- The coupling mode on the channels for which the efficiency is to be measured should be the same. (DC/AC + DC/AC)
- If the calculated efficiency exceeds 100%, it is treated as 100%.

8.2 Efficiency Screen

In the MEAS screen, use the **PAGE** key to move the cursor to "EFFI" (efficiency) to display the efficiency screen. The calculation formula can be set in the "EFFI" display of the STATUS screen.

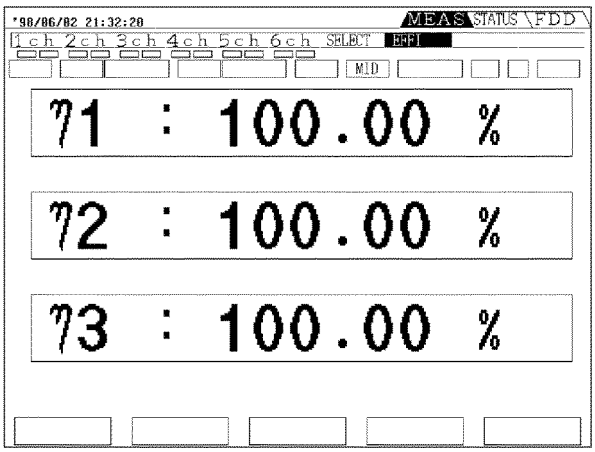

8.3 Setting the Calculation Formula

A maximum of three formulas can be set.

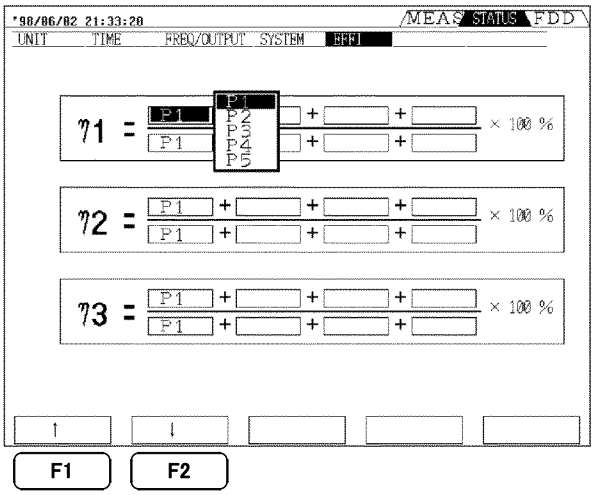

1. Press the **STATUS** key, then use the **PAGE** key to display the "EFFI" page.
2. Next, use the **CURSOR** keys to move the cursor to the denominator or numerator. The items which can be substituted in the formula appear in the lower part of the screen. Use function keys F1 (↑) and F2 (↓) to select the item.

The same setting is made for $\eta 2$ and $\eta 3$.

NOTE If the measurement value is not inserted in either the numerator or denominator, this is shown as η = "--".

8

8.4 Example Measurement

The following is an example of measuring the efficiency.

NOTE

In either the 3P3W or 3V3A connection mode of the 3193, the active power (*P*) of a 3ϕ3W system is found by the two-power calculation method, and the efficiency calculation result is also the same.

8.4.1 Efficiency Measurement of a Switching Power Supply (1ϕ2W)

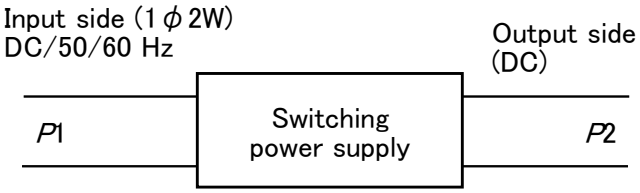

When channel 1 is the input and channel 2 the output
Input: 1P2W, AC mode / output: 1P2W, DC or AC+DC mode

$$\eta 1 = \frac{P2}{P1} \times 100$$

Measuring the efficiency of a single-phase power converter (switching power supply etc.)

8.4.2 Efficiency Measurement of a Switching Power Supply (3ϕ3W)

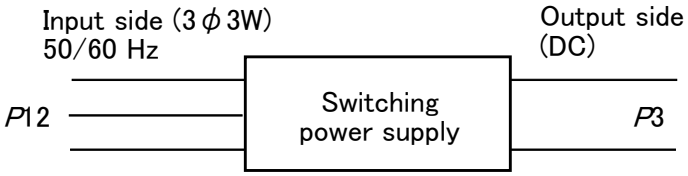

When channel 1, 2 are the input and channel 3 the output
Input: 3P3W, AC mode / output: 1P2W, DC or AC+DC mode

$$\eta 1 = \frac{P3}{P12} \times 100$$

Measuring the efficiency of a three-phase power converter (switching power supply etc.)

8.4.3 Efficiency Measurement of a Light Fitting (Two-Lamp)

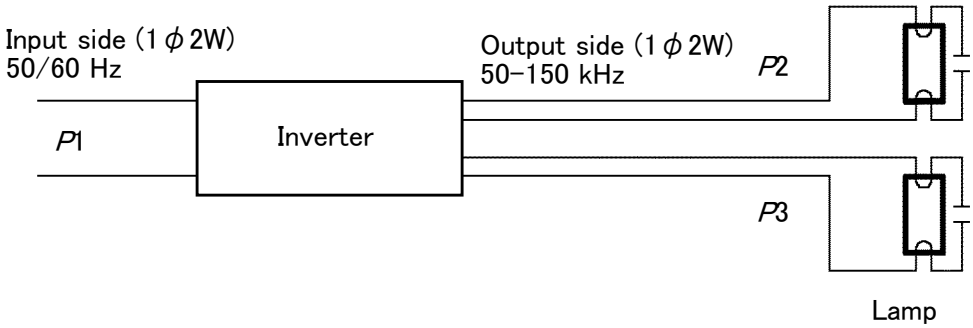

When channel 1 is the input and channel 2, 3 the output
Input: 1P2W, AC mode / output: 1P2W, AC or AC+DC mode

$$\eta 1 = \frac{P2+P3}{P1} \times 100$$

Measuring the efficiency of a light fitting (two-lamp)
Addition of active power on output side is a maximum of four items.

8.4.4 Efficiency Measurement of an Inverter (1φ2W)

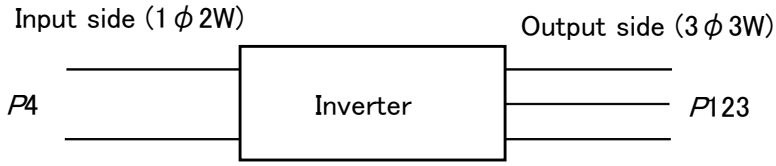

When channel 4 is the input and channel 1, 2, and 3 the output
Input: 1P2W, AC mode / output: 3V3A, AC or AC+DC mode

$$\eta 1 = \frac{P123}{P4} \times 100$$

Measuring the efficiency of an Inverter (3φ3W).

8

8.4.5 Efficiency Measurement of an Inverter (3ϕ3W) and Motor

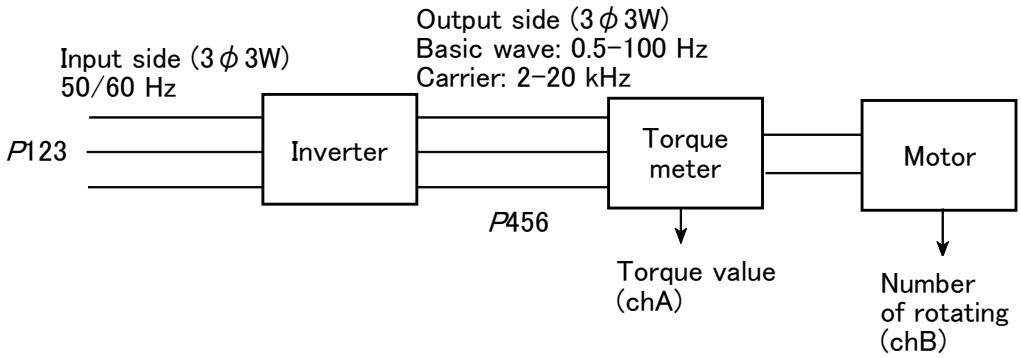

When channel 1, 2, 3 are the input and channel 4, 5, 6 the output:
Channel 1, 2, 3: input side, channel 4, 5, 6: output side
Input: 3V3A, AC mode / output: 3V3A, AC or AC+DC mode
Analog output from the torque meter: to channel A of the 9603
Analog output from the rotation counter: to channel B of the 9603
Motor power: *P*m

・Efficiency of an inverter :

$$\eta 1 = \frac{P456}{P123} \times 100$$

・Efficiency of a motor :

$$\eta 2 = \frac{Pm}{P456} \times 100$$

・Efficiency of total :

$$\eta 3 = \frac{Pm}{P123} \times 100$$

Measuring the efficiency of an inverter (3ϕ3W) and motor

NOTE The torque meter and rotation counter analog outputs used should be chosen to have as fast as possible a response.

Chapter 9
External Output/ External Control Terminals

This unit is provided with analog, monitor, and D/A outputs as standard equipment, so that it can be used together with a recorder. Various controls are also possible, with terminals including external control of integration, external control of the screen hold function, floppy disk drive and printer control, control terminals for the 9605.

⚠ WARNING

In order to avoid electric shock or a short circuit, turn off the power meter and the power flowing through the line being measured before connecting or disconnecting a connector and an output connector.

⚠ CAUTION

- When not using the connector, to avoid damage to the main unit, always fit the supplied cap.
- The output terminals and control terminals are not insulated. Handle these items carefully in order to avoid electric shock or a short circuit accident.
- To avoid damage to the unit, do not short the output terminal and do not input voltage to the output terminal.

NOTE

For the control terminals for the 9605, see the Instruction Manual for the 9605 HARMONIC/ FLICKER MEASUREMENTS UNIT.

9.1 Connector Pin Arrangement

The pin arrangement of the terminals (ANALOG OUT D/A OUT, EXT.CONT) on the rear panel is shown below.

1	*U*1 analog output	26	*U*4 analog output
2	*I*1 analog output	27	*I*4 analog output
3	*P*1 analog output	28	*P*4 analog output
4	*U*1 monitor output	29	*U*4 monitor output
5	*I*1 monitor output	30	*I*4 monitor output
6	*U*2 analog output	31	*U*5 analog output
7	*I*2 analog output	32	*I*5 analog output
8	*P*2 analog output	33	*P*5 analog output
9	*U*2 monitor output	34	*U*5 monitor output
10	*I*2 monitor output	35	*I*5 monitor output
11	*U*3 analog output	36	*U*6 analog output
12	*I*3 analog output	37	*I*6 analog output
13	*P*3 analog output	38	*P*6 analog output
14	*U*3 monitor output	39	*U*6 monitor output
15	*I*3 monitor output	40	*I*6 monitor output
16	Va monitor output (9603chA)	41	Vb monitor output (9603chB)
17	D/A1	42	D/A5
18	D/A2	43	D/A6
19	D/A3	44	D/A7
20	D/A4	45	D/A8
21	Analog GND	46	Analog GND
22	INTEG. EXT. CONT	47	Digital GND
23	INTEG. RESET	48	for the 9605
24	FDD/PRINTER.START	49	for the 9605
25	EXT. A/D ATART	50	for the 9605

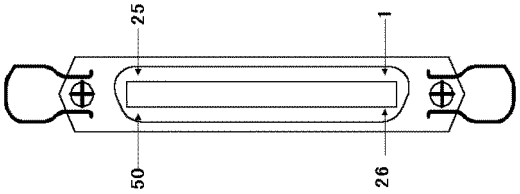

NOTE

- The analog ground serves for the input unit outputs and D/A outputs.
- The digital ground serves for the control signals .
- Outputs from the input units are not output if the corresponding input unit is not installed. The line goes open-circuit.
- For the analog output voltage values and monitor output voltage values, refer to the specifications for the particular input unit.
- For combinations 1P3W and above, there is no analog output of the sum value. If required, use the D/A output.
- For details of pin 48, pin 49, and pin 50, refer to the documentation supplied with the 9605 harmonic analysis/flicker measurement unit.

9.2 Internal Circuit for Analog, Monitor, D/A Outputs

The output rates are shown below.
For the details, please see the specifications of the output unit.

Output type	Output rate
Analog Output	5Vf.s. (1kV range: 3.333Vf.s.)
Monitor Output	1Vf.s. (1kV range: 0.667Vf.s.)
D/A Output	5Vf.s.

⚠ CAUTION

To avoid damage to the unit, do not short the output terminal and do not input voltage to the output terminal.

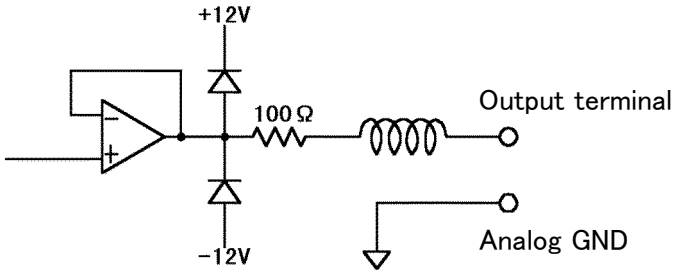

NOTE

- The output impedance is approximately 100 Ω. When connecting to a recorder, DMM, or similar, use a unit with a high input impedance (at least 1 MΩ).
- See the Specifications of each input units for the analog output and monitor output.
- For the specification of the D/A output, see chapter 10, "D/A Output."

9

9.3 Internal Circuit for the External Control and Timing

The external control signals can be 0/5 V logic signals or relay contact open/closed circuit signals.

⚠ CAUTION

- To avoid damage to the unit, do not input voltage exceeding 5.5 V.
- In the key lock state, external control functions are still enabled.
- The input control signals should be clean signals, with no chattering.

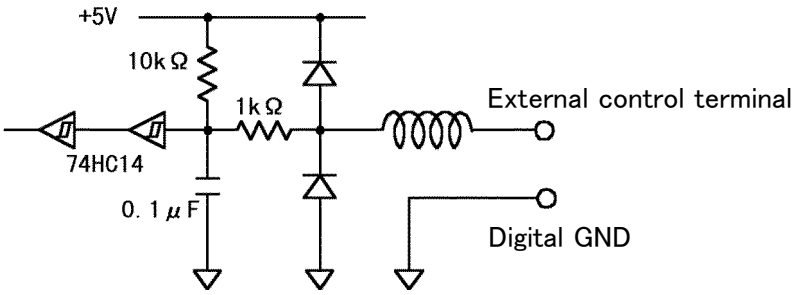

9.3.1 INTEG.EXT.CONT and INTEG.RESET Terminals

These terminals provide start/stop and reset control of integration, and have the same function as the panel **START/STOP** key.

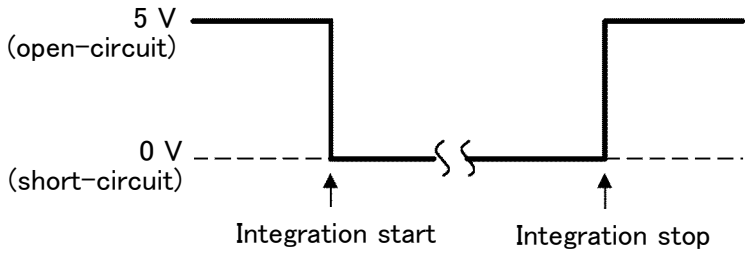

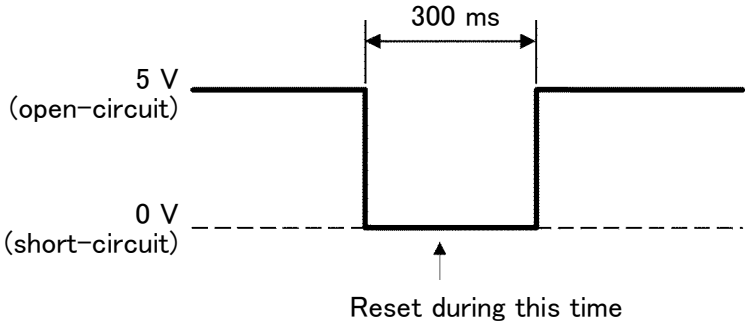

NOTE

Start/stop and reset control of integration applies simultaneously to all items being integrated. Separate control is not possible.

9.3.2 FDD/PRINTER.START Terminal

This terminal controls starting of floppy disk and printer output.

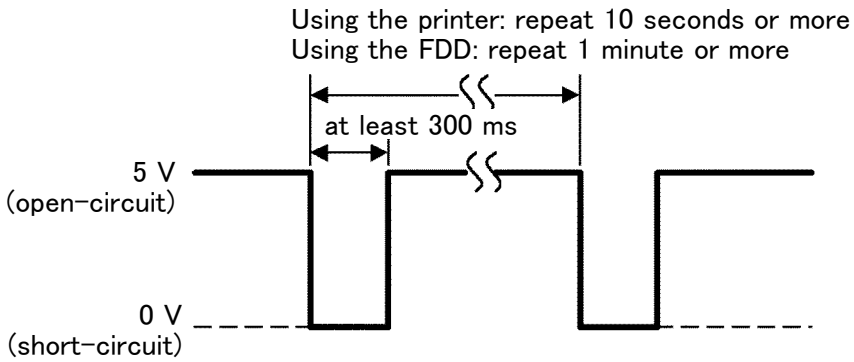

NOTE

- This signal is ignored when automatic output is activated.
- It is not possible to separately control writing to floppy disk and printer.
- When writing to the floppy disk, if no file name is specified, a file name is allocated automatically.

9.3.3 EXT.A/D START Terminal

When the display screen is held, this updates the display. In the peak hold state, the maximum value is reset at this point, and the peak hold operation begins again.

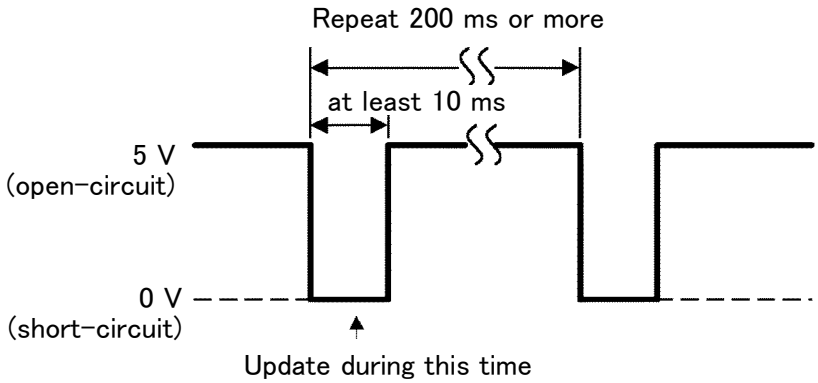

Chapter 10
D/A Output

10.1 Overview

This unit is provided with eight channels of D/A output as standard equipment. The items displayed on the screen are output as DC voltages.

⚠ WARNING

In order to avoid electric shock or a short circuit, turn off the power meter and the power flowing through the line being measured before connecting or disconnecting a connector and an output connector.

⚠ CAUTION

- To avoid damage to the unit, do not short the output terminal and do not input voltage to the output terminal.
- When not using the connector, to avoid damage to the main unit, always fit the supplied cap.
- The output terminals and control terminals are not insulated. Handle these items carefully in order to avoid electric shock or a short circuit accident.

NOTE

- The output impedance is approximately 100 Ω. When connecting to a recorder, DMM, or similar, use a unit with a high input impedance (at least 1 MΩ).
- For the specifications, see Chapter 20.
- The outputs correspond to the values shown on the screen. In the hold state, the displayed value continues to be output.
  When both hold and interval settings are made, the output is updated each interval time.
- When the averaging function is activated, the averaged value is output.
- Data from the harmonic analysis/flicker function is not output.
- For the output circuit, see Section 9.2, "Internal Circuit for Analog, Monitor, D/A Outputs."
- On the STATUS or FDD screen, the output is not updated.
- Data measured on the 9605 cannot be output.

10.2 Selecting Output Item

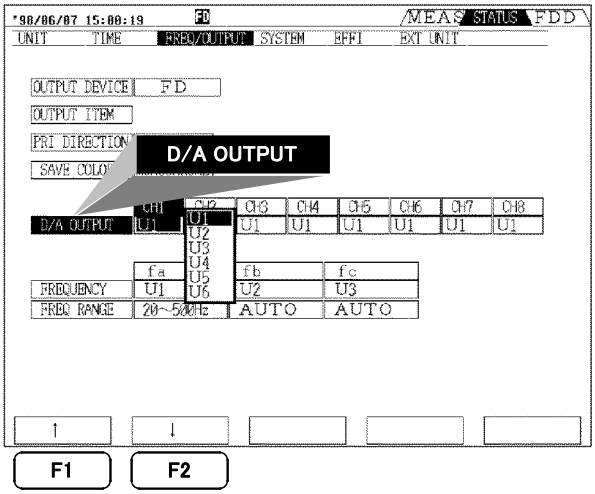

1. Press the **STATUS** key, then use the **PAGE** key to display the "FREQ/OUTPUT" page.
2. Using the **CURSOR** keys, move the cursor to the "D/A OUTPUT" item.
3. Select desired item from the window by pressing F1 (↑) or F2 (↓).
4. Press the **MEAS** key to return to the measurement screen to output data.

NOTE On the STATUS screen, D/A output is not updated.

10.3 Output Rate

The D/A outputs are ±5 V DC corresponding to full scale, where the full scale values are as shown in the following table.

Selecting items for output	Full scale
Voltage value, current value for each channel, SUM value of voltage and current, 9603 External signal unit (U1 – U6, I1 – I6, U12, U34, U56, U123, U456, I12, I34, I56, I123, I456, Va, Vb)	Measurement range
Effective power, reactive power, apparent power for each channel (P1 – P6, Q1 – Q6, S1 – S6)	(voltage range)×(current range) For example, when measuring in the 300 V range and 10 A range, 3 kW corresponds to full scale. Display value: −3 kW – 0 – +3 kW D/A output value: −5 V – 0 – +5 V
Effective power, reactive power, SUM value of apparent power during measuring 1P3W, 3P3W, (P12, P34, P56, Q12, Q34, Q56, S12, S34, S56) Effective power, reactive power, SUM value of apparent power during measuring 3V3A (P123, P456, Q123, Q456, S123, S456)	(voltage range)×(current range)×2 For example, when measuring in the 300 V range and 10 A range, 6 kW corresponds to full scale. Display value: −6 kW – 0 – +6 kW D/A output value: −5 V – 0 – +5 V
Effective power, reactive power, SUM value of apparent power during measuring 3P4W (P123, P456, Q123, Q456, S123, S456)	(voltage range)×(current range)×3 For example, when measuring in the 300 V range and 10 A range, 9 kW corresponds to full scale. Display value: −9 kW – 0 – +9 kW D/A output value: −5 V – 0 – +5 V
Power factor (λ)	Display value: −1 – 0 – +1 D/A output value: −5 V – 0 – +5 V
Phase angle (ϕ)	Display value: −180° – 0 – +180° D/A output value: −5 V – 0 – +5 V
Efficiency (η)	Display value: 0 – 100% D/A output value: 0 – 5 V
Current integrate value (Ih)	(current range)×(integrated time) For example, when integrating in the 10 A range for 1 hours, 10 Ah corresponds to full scale. Display value: −10 Ah – 0 – +10 Ah D/A output value: −5 V – 0 – +5 V
Effective power integrate for 1P2W (WP)	(voltage range)×(current range)×(integrated time) For example, when integrating in the 300 V range and 10 A range for 1 hours, 3 kWh corresponds to full scale. Display value: −3 kW – 0 – +3 kW D/A output value: −5 V – 0 – +5 V
Effective power integrate for 1P3W, 3P3W, 3V3A (WP)	(voltage range)×(current range)×(integrated time)×2 For example, when integrating in the 300 V range and 10 A range for 1 hours, 6 kWh corresponds to full scale. Display value: −6 kW – 0 – +6 kW D/A output value: −5 V – 0 – +5 V
Effective power integrate for 3P4W (WP)	(voltage range)×(current range)×(integrated time)×3 For example, when integrating in the 300 V range and 10 A range for 1 hours, 9 kWh corresponds to full scale. Display value: −9 kW – 0 – +9 kW D/A output value: −5 V – 0 – +5 V
Frequency (f)	Frequency range is full scale.

NOTE

- For integration, the integration time is the time interval set for the timer time or the real-time control time.
- For manual integration, the integration time is output as 10,000 hours.

Chapter 11
Using the Floppy Disk Drive (only 3193)

11.1 Overview

⚠ CAUTION

- Do not use 2DD floppy disk.
- Do not remove the floppy disk while the floppy disk unit is operating (the LED on the floppy disk unit is on). In the worst case, the floppy disk may be corrupted.
- Powering off the unit while the LED on the floppy disk drive is lit may corrupt the data on the disk.
- During automatic saving, do not remove the disk except when it is full. There is no problem as long as the LED is not lit.
- If a floppy disk is inserted upside down, backwards, or in the wrong direction, the floppy disk or the unit may suffer damage.

This chapter is on the use of the 3.5 inch floppy disk drive (hereinafter, FDD) installed in the HIOKI 3193.
There is no FDD in the HIOKI 3193-10.

Supported media

3.5-inch (2HD) MS-DOS format
1.2 MB (NEC PC-9801) / 1.44 MB (IBM-PC/AT)

Function

- Saving measurement values
- Saving the 3193 settings
- Loading/resetting 3193 settings
- Formatting a floppy disk (1.2 MB/1.44 MB)
- Automatic saving using time settings
- Starting saving by external control
- Update (upgrade)

File extensions

When this unit saves measurement data, it automatically appends a three-character extension to the file name. When the data is analyzed on a computer, the extension identifies the type of data.

Contents of files	Extensions	
Data file name (auto setting)	********.CSV	(AUTO***.CSV)
Unit setting file name (auto setting)	********.SET	(AUTO***.SET)
Screen copy file name (auto setting)	********.BMP	(AUTO***.BMP)

11.2 Operation Procedure

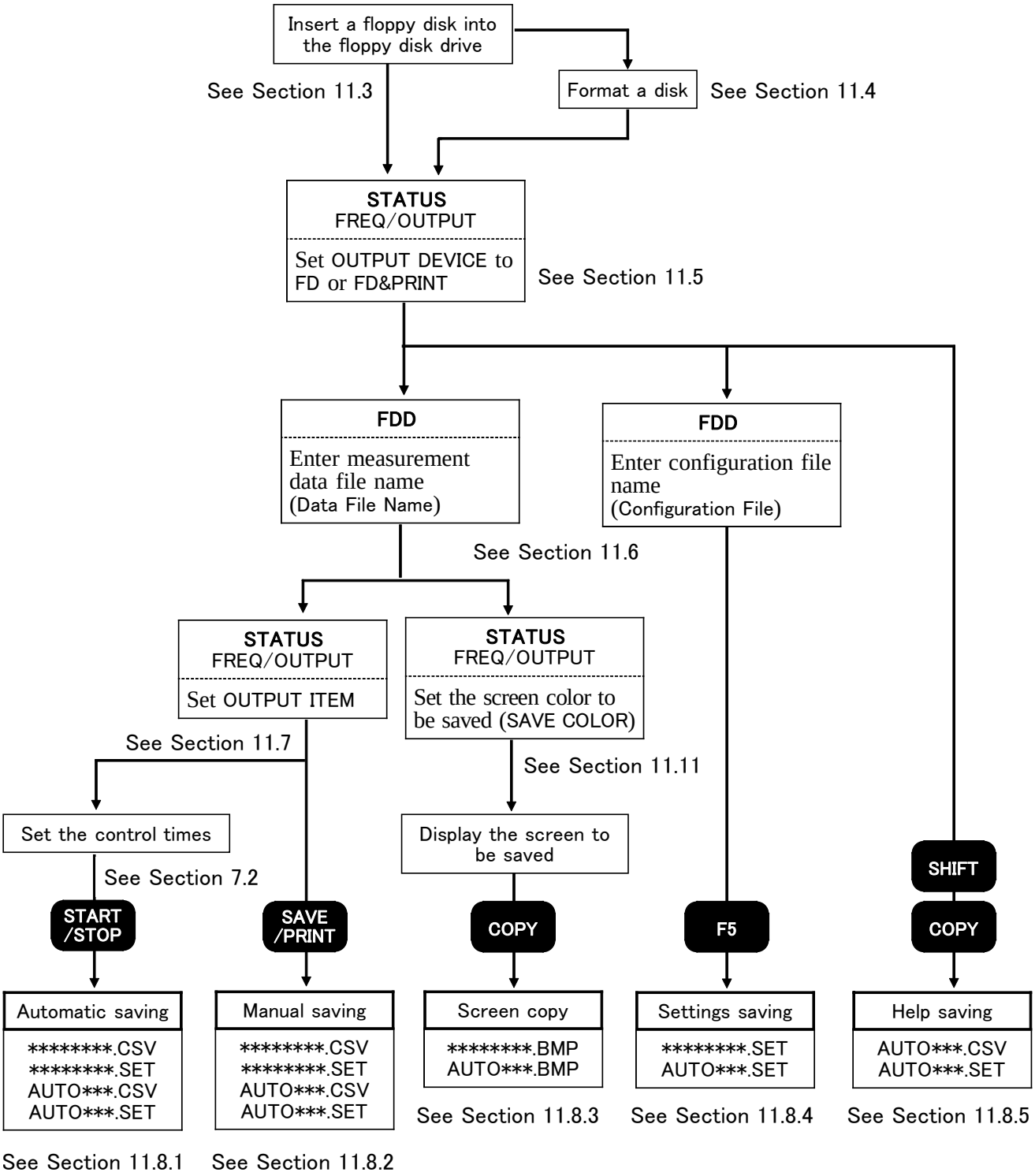

NOTE The only file saved to floppy disk by the 3193 that can be reloaded is that created with [Save Device Settings]. With other measurement data and setting data files, it is only possible to check file names or delete files. See "11.11 Floppy Disk Data Output Format."

11.3 Using the Floppy Disk

Inserting a Floppy Disk

Insert the floppy disk (with the printed label facing right) all of the way into the drive.

If the floppy disk is inserted correctly, the Eject button will pop out.

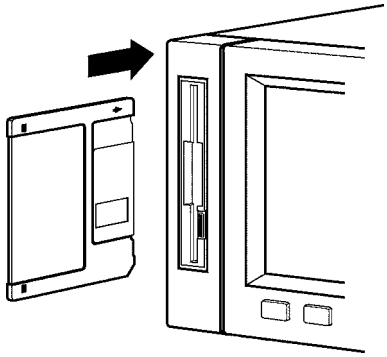

Ejecting a Floppy Disk

Pressing the Eject button causes the floppy disk to pop out.

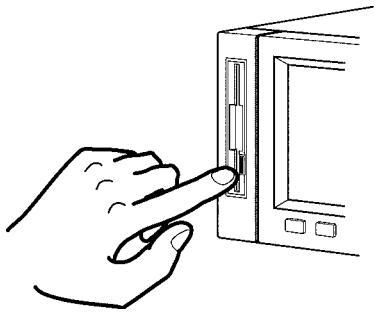

Protecting Data on a Floppy Disk

Each floppy disk has a write-protect tab on it. If the write-protection is enabled, it is impossible to do anything to the data on the floppy disk except to load it.

To save the data on the floppy disk, disable the write-protection.

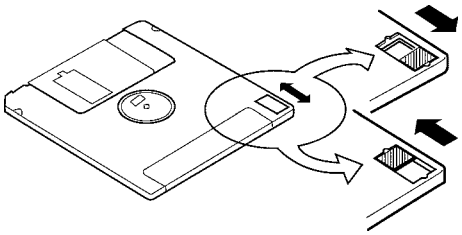

11.4 Formatting a Floppy Disk

This function is used in order to format floppy disks. It is not necessary for the formatted floppy disk.

⚠ CAUTION

The formatting process erases all data previously saved to that floppy disk. Make sure that the floppy disk does not contain any essential data before formatting it.

Setting Method

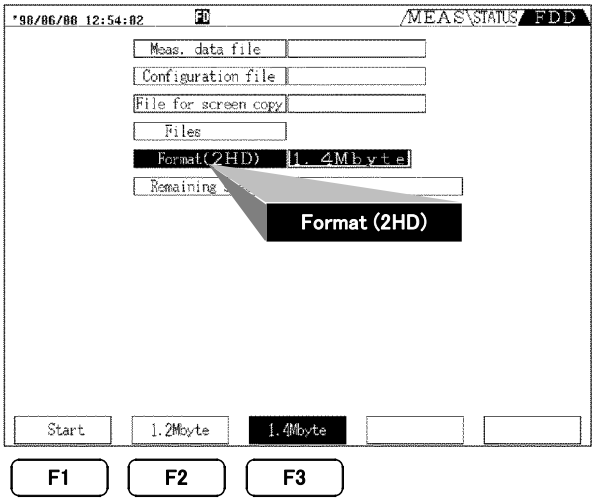

1. Insert the floppy disk that is to be formatted.
2. Press the **FDD** key to display the FDD screen.
3. Using the **CURSOR** keys, move the cursor to the "Format (2HD)" item.
4. Select the F2 (1.2MB) or F3 (1.4MB) key.
5. Press the F1 (Start) key, and the format confirmation dialogue is displayed.
   Pressing F1 (YES) executes formatting.
   Pressing F2 (NO) cancels formatting.
6. After formatting, "Formatting is completed" is displayed.

11.5 Switching the FDD/Printer

The 3193 has a built-in floppy disk drive (FDD). A printer option is also available. Both of these can be used for data output as required.
Output can also be controlled by the various time functions.

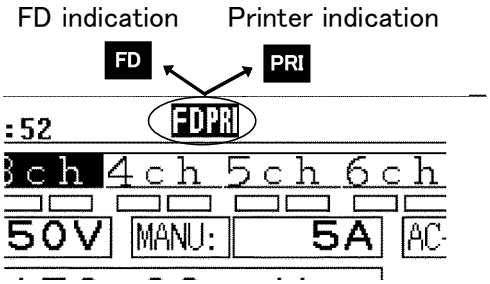

NOTE

- For details on using the floppy disk, see Chapter 11, "Using the Floppy Disk Drive".
- For details on using the printer, see Chapter 13, "Using the Printer".

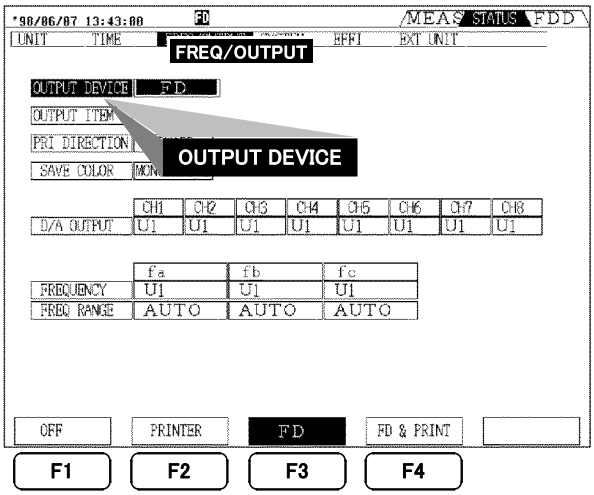

■ Selecting the output destination

1. Press the **STATUS** key, then use the **PAGE** (◀▶) keys to display the "FREQ/OUTPUT" page.
2. Using the **CURSOR** keys, move the cursor to the "OUTPUT DEVICE" item.
3. Select from F1 (OFF), F2 (PRINTER), F3 (FD), F4 (FD&PRINT).

NOTE

When "FD&PRINT" is selected, after outputting to the printer, the same data is written to the floppy disk.

11

11.6 Setting File Names for Saved Measurement Data

The file name consists of up to eight characters. Use the following example as a guide to setting the file name.

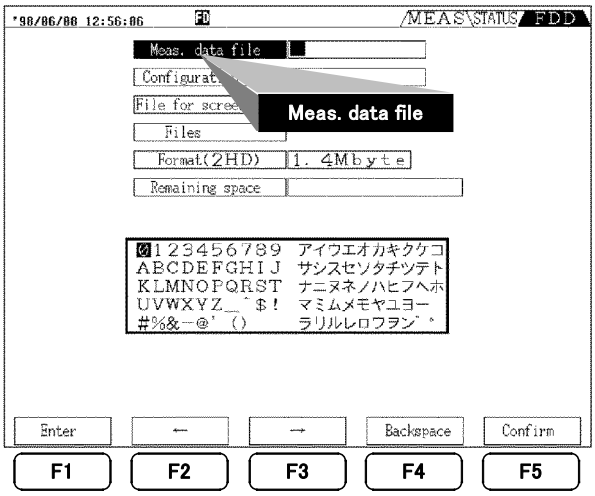

1. Press the **FDD** key to display the FDD screen.
2. Using the **CURSOR** keys, move the cursor to "Meas. data file".
3. Press the F1 (Set) key to set. The character list which can be select is displayed on the lower part of screen.
4. Using the **CURSOR** keys, move the cursor to desired character and press the F1 (Enter) to enter. To correct it, Press F2 (←), F3 (→), F4 (Backspace).
5. After settings, press the F5 (Confirm) key. The character list goes off.
6. Press the **MEAS** key to return the measurement screen, and then press the **SAVE/PRINT** or **START/STOP** key to start saving a setting file name.

NOTE

- If a file of the specified name already exists on the floppy disk, the file is automatically saved as another name. If the file name is not specified, it is saved in the same way.
- A space is invalid in the file name.

11.7 Setting the Measurement Items for Saving

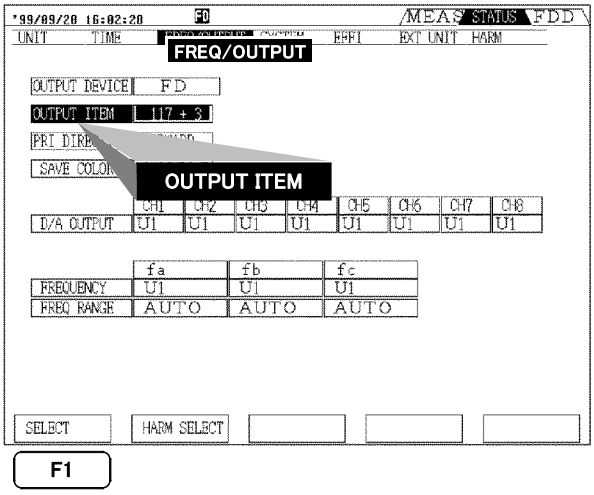

1. Press the **STATUS** key and then use the **PAGE** key to display the "FREQ/OUTPUT" page.
2. Using the **CURSOR** keys, move the cursor to the "OUTPUT ITEM" item.
3. Press the F1 (SELECT) key , to display the screen for output item selection. In this screen, "ON" indicates the selected items, and items not marked are not saved.

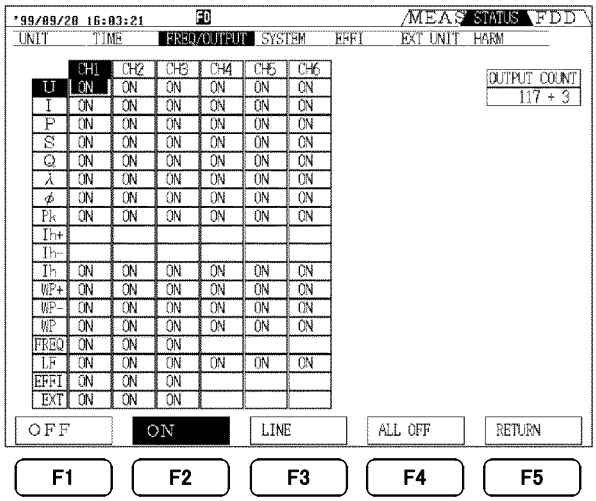

4. Move the cursor to the item to be saved.
5. Press the F2 (ON) key to make a setting.
   To delete the item which has been set, press F1 (OFF) key.
6. Pressing the F3 (LINE) key sets the items on the specified line to on or off.
7. When the settings are completed, press the F5 (RETURN) key.

NOTE

- The items to be saved is same as the printer.
- For settings of the measurement data in harmonic/flicker analysis function, see Instruction manual for them.
- "OUTPUT COUNT" shows the number of data present for output. The number "+3" refers to the date, time or interval time. This number always accompanies these items.
- Each item of a channel corresponds to an efficiency or 9603 data as shown below.
  EFFI/CH1: efficiency η 1
  EFFI/CH2: efficiency η 2
  EFFI/CH3: efficiency η 3
  EXT /CH1: 9603 CHA
  EXT /CH2: 9603 CHB
  EXT /CH3: 9603 PM (This cannot be set unless the motor power is calculated.)

11

11.8 Saving the Data on FDD

11.8.1 Automatic Saving Using Time Settings

Automatic saving is achieved by combination with the interval, timer, or real-time control time settings.

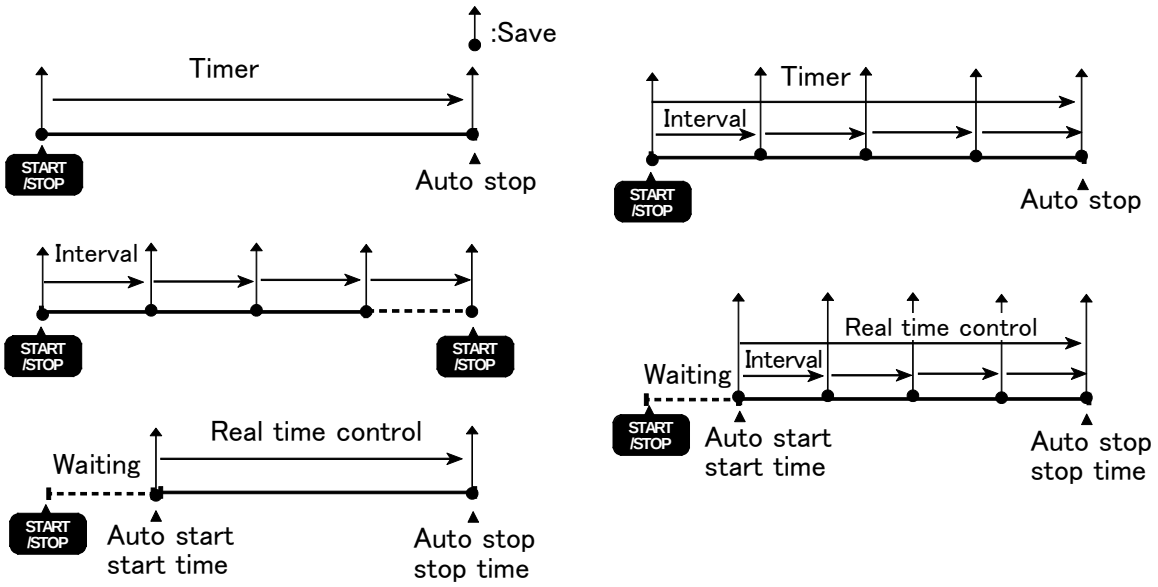

Setting Method

1. Set the the item to be saved and file name.
2. Set the time on the "time control" screen from the STATUS screen, and then return to the MEAS screen.
   For details, see Section 4.9.
3. Press the **START/STOP** key to start auto-saving by time set.
4. To stop saving, press the **START/STOP** key again.

NOTE

- The data values for a single set of timing operations are saved to the same file name.
- During operations by time controls, it is not possible to change the settings. For the items which is set to auto-range, the range is fixed when the **START/STOP** key is pressed.
- If the settings are different from those at the start time, setting data is also saved for each interval or at the stop time.
- If the timer end timing does not coincide with the interval timer timing, then the unit stops with the timer end timing, and the last interval timing is ignored.
- If the real-time control end timing does not coincide with the interval timer timing, then the unit stops with the real-time control end timing, and the last interval timing is ignored.
- If the floppy disk becomes full during automatic saving, the saving operation is discontinued. In this case, insert a new, formatted, floppy disk. The automatic saving then continues, using the same file name.

11.8.2 Manual Saving

Pressing the **SAVE/PRINT** key can save the measurement data which is selected in Section 11.7.

NOTE

During automatic output, the **SAVE/PRINT** key is invalid.

11.8.3 Screen Hard Copy

The screen display can be saved in bmp file.
For settings of file name, see Section 11.6, "Setting File Names for Saved Measurement Data".

1. Select STATUS screen to display FREQ/OUTPUT page.
2. Using the **CURSOR** keys, move the cursor to "Saving screen color".

   F1 (Colors): Save, including the screen colors.
   F2 (Gray): Save as a gray-level screen.
   F3 (Monochrome): Save as a black-and-white screen.

3. Select the display to be saved and press **COPY** key.

The time and data capacity to save depends on the setting conditions.

	Saving time	Saving capacity
Colors	Approx. 5 min	Approx. 300 KB
Gray	Approx. 3 min	Approx. 165 KB
Monochrome	Approx. 1 min	Approx. 40 KB

It is not possible to save automatically corresponding to the time settings.

11.8.4 Saving the Settings

Pressing the **COPY** key after pressing the **SHIFT** key can save the settings for the unit.
For items to be saved, see Section 13.7.4, "Help Printing Mode."

NOTE

During automatic output to printer or FDD, this key is invalid.

11.8.5 Saving and Loading Settings

By saving the current settings of the unit and reloading them later, the current state can be restored.

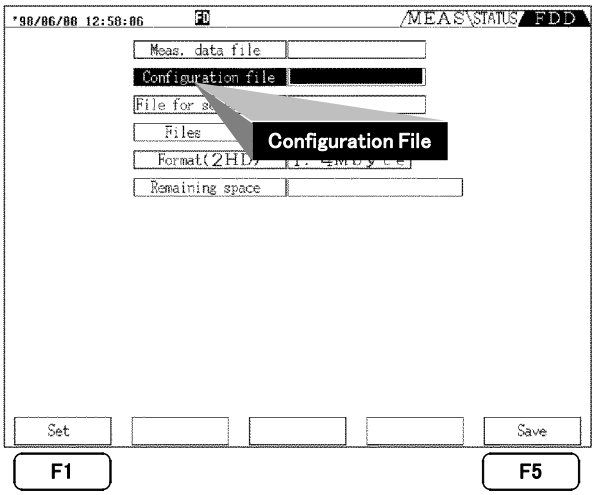

Saving the Settings

1. Insert the floppy disk into the unit.
2. Press the **FDD** key to display the FDD screen.
3. Using the **CURSOR** keys, move the cursor to "Configuration File".
4. Press the F1 (Set) to enter the setting mode. Make a setting referring to Section 11.6.
5. After settings, press the F5 (Confirm) key to complete setting.
6. Press the F5 (Save) key to save the settings.

NOTE

If a file of the specified name already exists on the floppy disk, the file is automatically saved as another name. If the file name is not specified, it is saved in the same way.

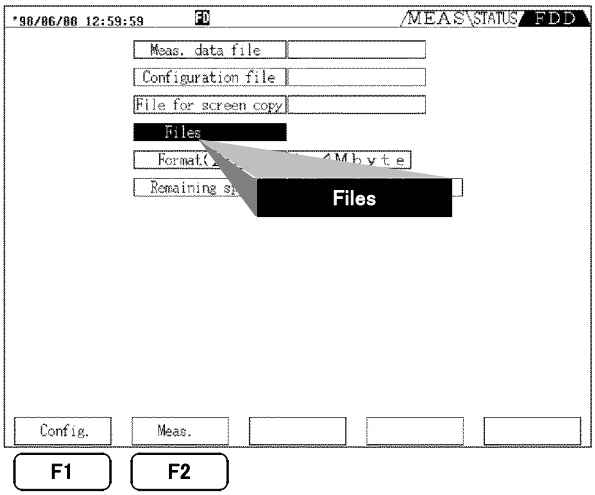

Loading and Deleting Settings

1. Insert the floppy disk to be loaded into the floppy disk drive.
2. Press the **FDD** key to display the FDD screen.
3. Using the **CURSOR** keys, move the cursor to "Files".
4. Press the F1 (Config.) key to display the configuration files of the floppy disk.
5. Using the F1 (↑) and F2 (↓) keys, move the cursor to the file name to be loaded.
6. Press the F3 (Load) key.

   The following message is displayed.
   "Loading configuration file"
   F1 (Yes) : loads settings and executes unit setting again.
   F2 (No) : does not execute.

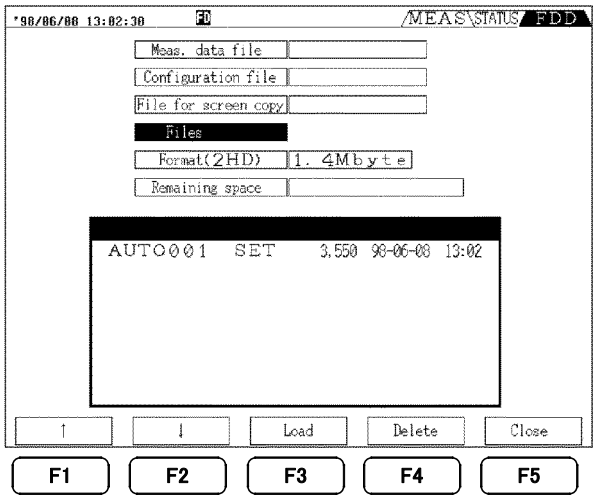

NOTE

To restore the settings of the unit, the option configuration must be unchanged. If any aspect of the configuration has changed the reload will not be possible.

11.9 Information Which Can Be Saved

From the number of items being saved and the remaining capacity of a floppy disk, you can find out how many more save operations are possible.

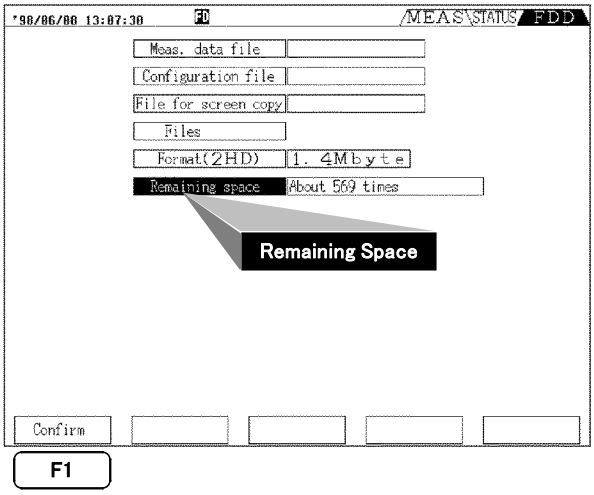

1. Insert the floppy disk to be saved to the floppy drive.
2. Press **FDD** key to display the FDD screen.
3. Using the **CURSOR** keys, move the cursor to "Remaining Space" and press F1 (Confirm).
4. The number of save operations possible is calculated backwards from the remaining capacity of the floppy disk and the number of items being saved, and displayed.

NOTE

- There is no hard copy function for this screen.
- The calculated figure is a prediction, not an absolute value.

11.10 Deleting and Confirming Files

This function is used to delete unnecessary files from a floppy disk.

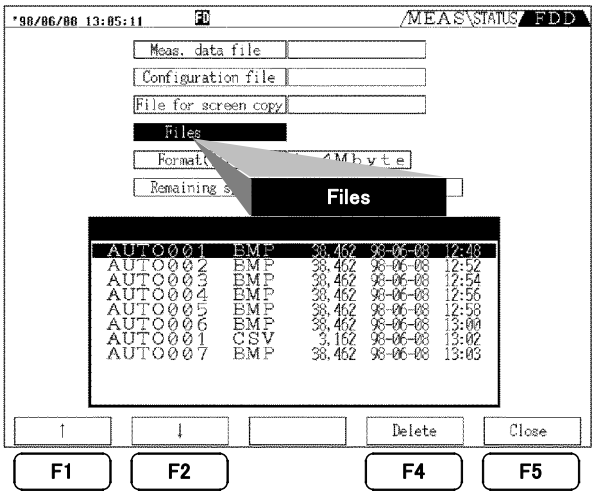

Confirmation of measurement data file name

1. Insert the floppy disk into the floppy disk drive.
2. Press the **FDD** key to display the FDD screen.
3. Using the **CURSOR** keys, move the cursor to "Files".
4. Press the F2 (Data) to display the file list and confirm the file name.
5. Using the F1 (↑) and F2 (↓), move the cursor to the file name to be deleted.
6. Press the F4 (Delete), and "Data file is deleted OK?"
   F1 (Yes) : specified file is deleted.
   F2 (No) : deleting is not executed.

11.11 Format for Data Output to Floppy Disk

Measurement data is saved in text format, and the data format is shown below. Files begin with a header section (all data that has been saved), followed by measurement value sections listed for each time period.
A line feed is executed for the header section and for each measured value at each time.

Data format

Item	Example data	Size (bytes)
Date	97/01/25	8
Time	12:34:56	8
Other than integrated power levels	+123.45E+00	11
Integrated power levels	+12345.67E+00	13
Out-of-range data	+9999.9E+99	11
Invalid data	+7777.7E+99	11

11.12 Message and Error Displays

Message	Meaning
"Save completed"	Indicates that the save has completed. The name of the file saved, the modification date, and remaining capacity for saving are also shown. To clear the message, press any panel key.
"Loading settings file"	Appears when the main unit settings are loaded from a floppy disk. The 3193 is reset with the information from the settings file.
"Formatting floppy disk"	Appears when the process of formatting a floppy disk starts.
"Formatting in progress"	Appears while the formatting of the floppy disk is in progress.
"Formatting completed"	Appears when the process of formatting a floppy disk has completed. To clear the message, press any panel key.
"Deleting file"	Indicates that a data file or settings file will be deleted from the floppy disk.

Error display	Meaning
"Disk access error"	Indicates that there is no disk in the floppy disk drive, that the disk has an unusable format, or that reading the disk failed.
"File cannot be opened"	An attempt to open a settings file failed.
"Save failed"	An attempt to write to a data file or settings file failed. Replace the floppy disk and try again.
"Load failed"	An attempt to load from a settings file failed.
"Settings file cannot be loaded because input unit configuration has changed"	An attempt was made to load a settings file, which applies to a 3193 with a different combination of input units installed. This usually appears when the clamp-on sensor is of a different type in the settings file.
"Disk is write-protected"	The floppy disk is write-protected. Move the tab to the write-permit position.
"Disk full"	The floppy disk is full, and no more writing is possible. Insert a new floppy disk.
"Formatting failed"	The formatting floppy disk is failed.
"File names may not include spaces."	The setting file name has spaces.

(To clear a message, press any panel key.)

Chapter 12
GP-IB and RS-232C Interface

12.1 Overview

The 3193 includes the GP-IB interface and RS-232C interface as a standard feature.

⚠ WARNING

In order to avoid the possibility of an electric shock, unplug the power meter's power cord and disconnect the other wiring before connecting the GP-IB or RS-232 cable to the interface connector.

⚠ CAUTION

- Turn the power off when connecting the personal computer to the power meter. Connecting or disconnecting cables while the power is on could damage the equipment.
- After connecting the GP-IB or RS-232C cable, always be sure to secure the connection with the screws on the connector.

NOTE

- It is not possible to use simultaneously both GP-IB and RS-232C interfaces.
- When the screen is STATUS screen or FDD screen, communication will not be possible. To communicate, use the device at the MEAS screen.

12.2 Specifications

12.2.1 GP-IB Interface

Compliance standard: IEEE-488.1 1987
Reference standard: IEEE-488.2 1987

NOTE

On this unit, if the output queue becomes full, it is cleared and a query error is generated. This does not correspond to the clearing of the output queue and the outputting of a query error in the deadlock state as stipulated in IEEE 488.2. (A deadlock state occurs when both the input buffer and the output queue are full, and processing cannot continue normally.)

Interface Functions Provided

SH1	All source handshake functions
AH1	All acceptor handshake functions
T6	Basic talk functions Serial poll function The talker cancellation function with MLA (My Listen Address) is provided.
L4	Basic listener functions Listen-only mode is not provided. The listener cancellation function with MTA (My Talk Address) is provided.
SR1	All service request functions
RL1	All remote/local functions
PP0	Parallel polling is not provided.
DC1	All device clear functions
DT1	All device trigger functions
C0	The controller function is not provided.

ASCII codes are used.
When using the GP-IB cable, the following HIOKI's shielded cables can be used.
9151-02 GP-IB CONNECTION CABLE (2 m)
9151-04 GP-IB CONNECTION CABLE (4 m)

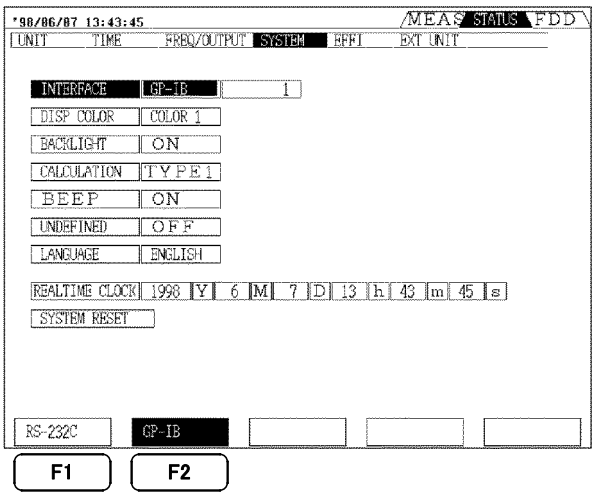

1. Press the **STATUS** key and then use the **PAGE** key to display the "SYSTEM" page.
2. Using the **CURSOR** keys, move the cursor to the "INTERFACE" item, and press F2 (GP-IB).
3. Move the cursor to the right column and set the address by pressing F1 (↑), F2 (↓).

12.2.2 RS-232C Interface

Transfer system	Start-stop synchronization
Baud rate	2400, 9600 bps
Data length	7 or 8 bits
Parity	Even, odd or none
Stop bits	1 or 2 bits
XON/XOFF	Can be transmitted and received. (Set with the RS232C:HANDshake command) An XOFF (13 H) code is transmitted when the input buffer is 3/4 full (1536 bytes). 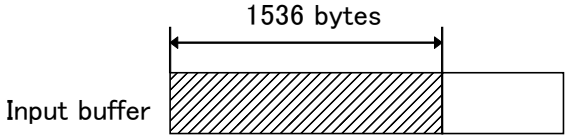 An XON (11H) code is transmitted when the input buffer is 1/4 full (512 bytes). 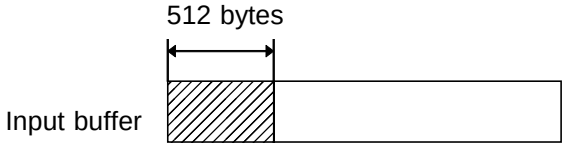
Hardware handshake	Can be transmitted and received. (RS-232C: HANDshake command)
Execution confirmation messages	After analyzing and executing one line of data (data up to the terminator) from the controller, a numeric data value (ASCII) is returned. (RS-232C: Set with the ANSWer command) Transmitted data from this unit 000: no error nnn: error detected in item nnn of the received program code In the case of a query command, the transmission is appended after the response message.
Electrical characteristics Input voltage levels Output voltage levels (load impedance 3 to 7 kΩ)	 +5 V to +15 V: ON, -15 V to -5 V: OFF +5 V to +9 V : ON, -9 V to -5 V: OFF

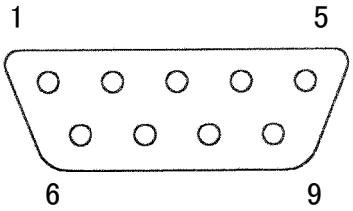

RS-232C Connector Pin Assignments

Connector specification

Pin No	EIA symbol	JIS symbol	Common symbol	Function
1	CF	CD	DCD	Data channel detection
2	BB	RD	RxD	Reception data
3	BA	SD	TxD	Transmission data
4	CD	ER	DTR	Data terminal ready
5	AB	SG	GND	Signal ground
6	CC	DR	DSR	Data set ready
7	CA	RS	RTS	Ready to send
8	CB	CS	CTS	Clear to send
9	CE	CI	RI	Call indicator

12

RS-232C Cable

DOS/V PC
Flow control: None, XON/XOFF

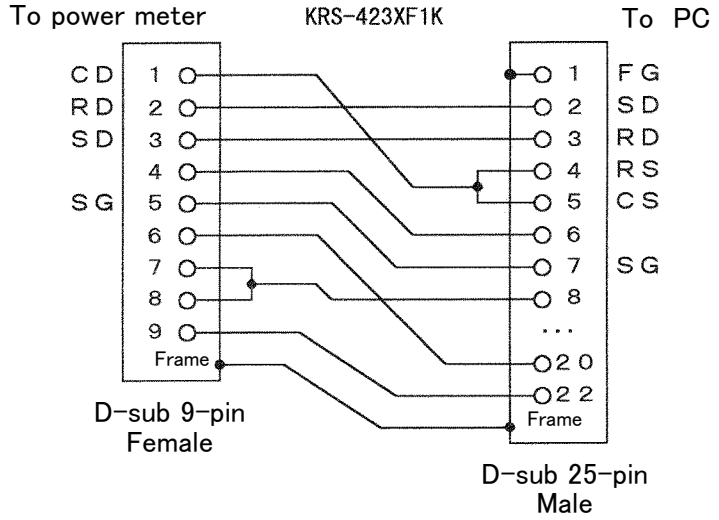

DOS/V, PC-9801 PC
Flow control: RTS/CTS, both

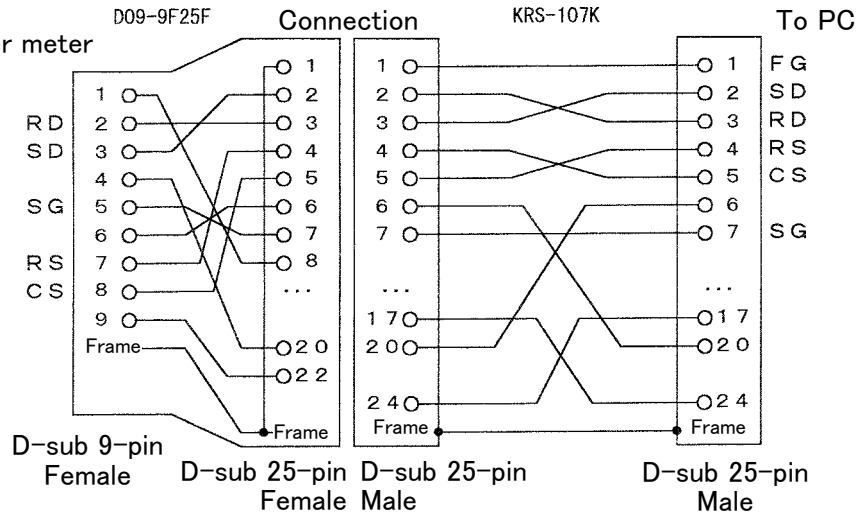

DOS/V, PC-9801 PC
Flow control: None, XON/XOFF

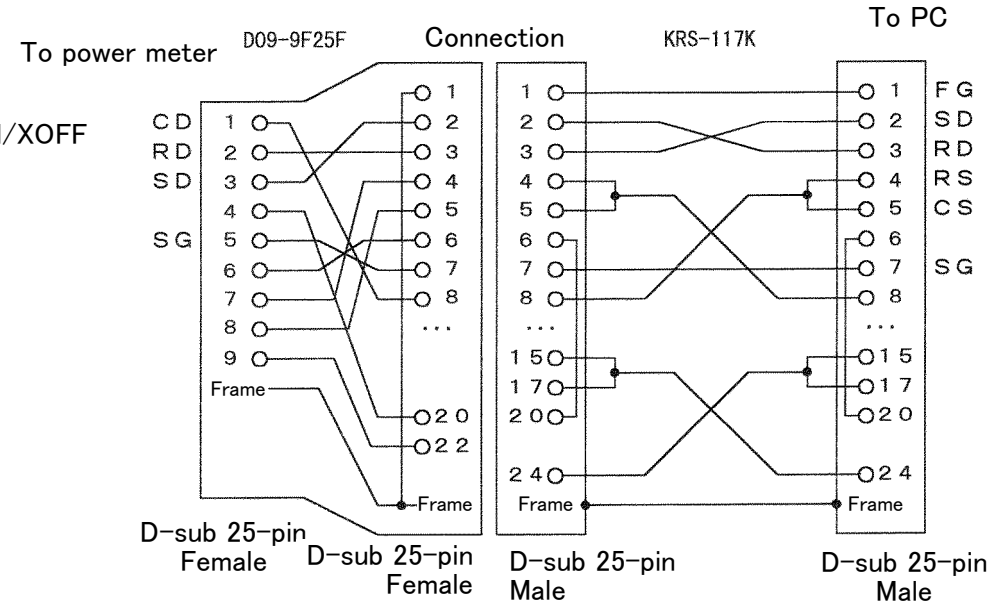

DOS/V PC
Flow control: None, XON/XOFF

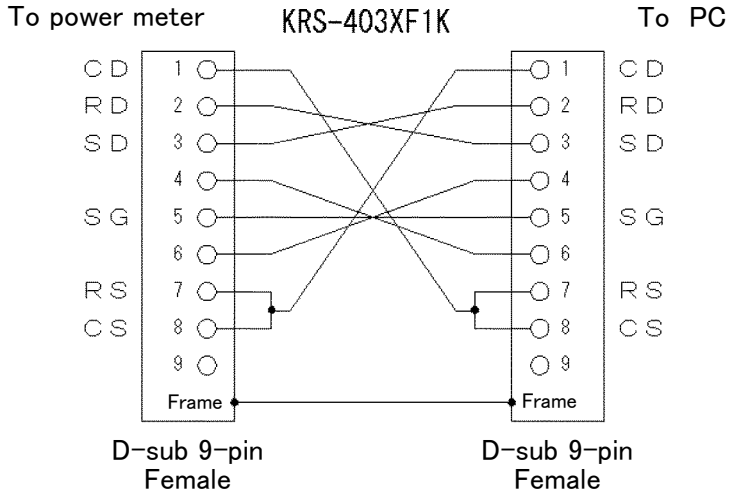

DOS/V, PC-9801 PC
Flow control: RTS/CTS, both

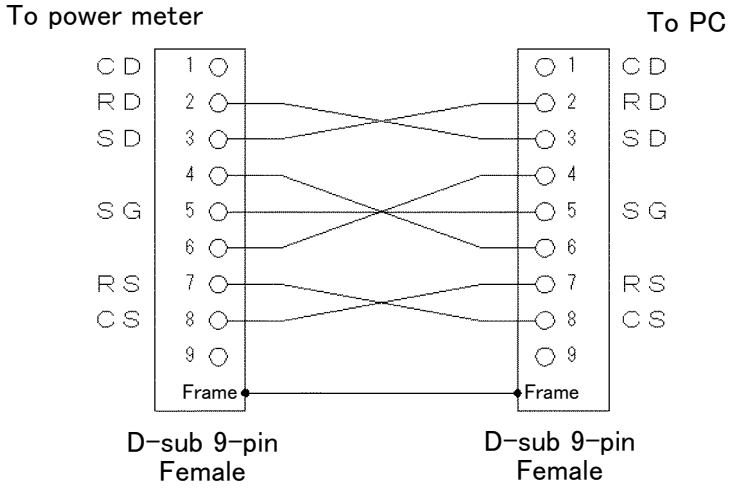

Connecting example of Sanwa Supply's RS-232C Cables (reverse)

Flow control / Connecting to the personal computer	None, XON/XOFF	RTS/CTS, XON/XOFF
DOS/V	KRS-423XF1K	KRS-107K in combination with the D09-9F25F Adapter
NEC PC-9801	KRS-117K in combination with the D09-9F25F Adapter	KRS-107K in combination with the D09-9F25F Adapter

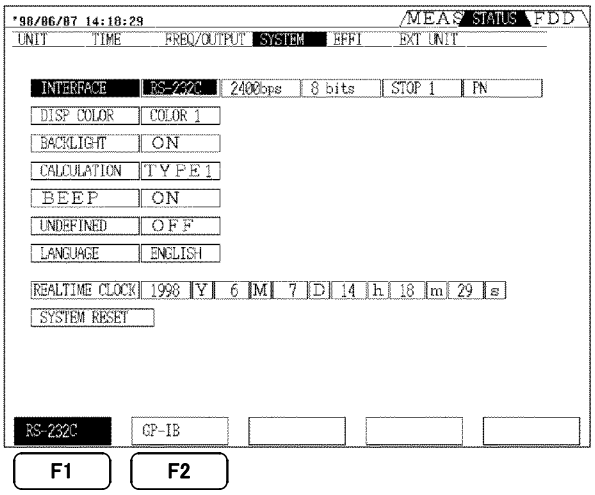

1. Press the **STATUS** key and then use the **PAGE** key to display the "SYSTEM" page.
2. Using the **CURSOR** keys, move the cursor to the "INTERFACE" item, and press F1 (RS-232C).
3. Move the **CURSOR** keys to the right column and set baud rate, data length, stop bit, parity.

12

12.3 Interface Outline

12.3.1 Messages

Data received or sent by the interface is called a message. The following are the message types:

- Messages
  - Program messages
    - Command messages
    - Query messages
  - Response messages
  - Execution confirmation messages (RS-232C only)

Of these, program messages are those received by the unit from the controller, while response messages are those sent from the unit to the controller.

(1) Program messages

Program messages can be divided into either command messages or query messages.

Command messages are orders for control of the unit, such as for making settings or for reset or the like.

Query messages are orders for responses relating to results of operation, results of measurement, or the state of device settings.

(2) Response messages

After a query message has been received, a response message is produced the moment that its syntax has been checked. It is also possible to change the message unit separator of response messages from the semicolon ";" to the comma "," when headers are off, using the command "TRANsmit:SEParator". Initially this separator is set to the semicolon ";". A space is represented by " "(space) in this manual.

Headers on **"U1 101.20E+00;I1 1.200E-03"**
Headers off **"101.20E+00;1.2000E-03"**
↓
Headers off **"101.20E+00,1.2000E-03"**

" " mark used in format means a space.

(3) Execution confirmation message

Execution confirmation message is the numeric data (ASCII) created by analyzing and executing one line of data (data up to the terminator) from the controller. This numeric data is returned to the controller. The controller and this unit are synchronized by means of this data.
(Refer to Section 12.2.2, "RS-232C Interface".)

12.3.2 Command Syntax

The names of commands for this unit are as far as possible mnemonic. Furthermore, all commands have a long form, and an abbreviated short form. In command references in this manual, the short form is written in upper case letters, and then this is continued in lower case letters so as to constitute the long form. Either of these forms will be accepted during operation, but intermediate forms will not be accepted. Further, during operation both lower case letters and upper case letters will be accepted without distinction.

(Long form) :LANGUAGE
:LANGuage
(Short form) :LANG
} Accepted

:LANGU
:LAN
} Error

Response messages generated by this unit are in long form and in upper case letters.

12.3.3 Headers

Whether or not headers are prefixed to response messages is set by the "HEADer" command. It is essential to prefix headers to program messages.

(1) Command program headers

There are three types of command: simple commands, compound commands, and standard commands.

① Simple command header

This header is a sequence of letters and digits.

:HEADer

② Compound command header

This header is made up from a plurality of simple command type headers marked off by colons ":".

:VOLTage[channel]**:RANGe**

③ Standard command header

This header begins with an asterisk "*", and continues with a standard command stipulated by IEEE 488.2.

***RST**

(2) Query program headers

These are for commands used for interrogating the unit about the results of operations, about measured values, or about the current states of settings for the unit. As shown by the following examples, they can be recognized as queries by a question mark appearing after the program header. The structure of the header is identical to that of a command program header, with "?" always being affixed to the last command. There are queries possible in each of the three previously described types of command form.

:SCALe1?
:SCALe1:PT?

12.3.4 Message Terminators

This unit recognizes,
(1) linefeed character (LF; GP-IB and RS-232C),
(2) EOI signal (GP-IB only),
(3) LF with EOI (GP-IB only),
as message terminators.

To terminate a response message, the 3193 always provides the appropriate EOI signal, and also sends a terminating character sequence. By the use of the "TRANsmit:TERMinator" command either of the following can be selected as response message terminator sequence:

GP-IB	RS-232C
LF with EOI (linefeed only)	LF (linefeed only)
CR + LF with EOI (carriage return plus linefeed)	CR + LF (carriage return plus linefeed)

The initial setting is in the column above.
A detailed explanation of the "TRANsmit:TERMinator" command is given in Section 12.5.2, "Commands specific to the 3193."

12.3.5 Separators

(1) Message unit separator

A semicolon ";" is used as a message unit separator when it is desired to set out several messages on a single line.

"*RST;:SCALe1:CT 10;:AVEraging:MODE LIN"

(2) Header separator

In a message which has a header and data, a space (represented by " " in the examples) is used as the header separator to separate the header from the data.

":VOLTage1:AUTO ON" (actually, " " is not displayed.)

(3) Data separator

If a message has several data items, commas are required as data separators for separating these data items from one another.

":MEASure? U1,I1,P1"

12.3.6 Data Formats

This unit uses character string data and decimal numeric data, and the type used varies according to the command in question.

(1) Character data

Character string data must always begin with an alphabetic character, and the following characters can be either alphabetic characters or numerals. Although in character data either upper case letters or lower case letters are accepted, response messages output by this unit are always in upper case letters.

```
":MEASure? U1,I1,P1"
```

(2) Decimal data

The numeric data values are all represented in decimal, in three formats identified as NR1, NR2 and NR3, and each of these can appear as either a signed number or an unsigned number. Unsigned numbers are taken as positive.
Further, if the accuracy of a numerical value exceeds the range with which this unit can deal, it is rounded off. (5 and above is rounded up; 4 and below is rounded down).
① NR1 format: integer data (+12, -23, 34)
② NR2 format: fixed point numbers (+1.23, -23.45, 3.456)
③ NR3 format: floating point numbers (+1.E-2, -2.3E+4)
The term "NRf format" includes all these three formats.

When this unit is receiving it accepts NRf format.
All of the following examples set the voltage range to 150 V:

```
":VOLTage1:RANGe 150"
":VOLTage1:RANGe 150.2"
":VOLTage1:RANGe 1.495E2"
```

When it is sending response messages it utilizes whichever one of the formats NR1 to NR3 is indicated in the particular command.

```
:AVEraging:COEFficient     :BACKlight:AUTO
:CLOCK                     :CURRent[ch]:RANGe
:DATAout:ITEM:EFFiciency   :DATAout:ITEM:FREQuency
:DATAout:ITEM:EXTernalin   :DATAout:ITEM:INTEGrate
:DATAout:ITEM:LOADfactor   :DATAout:ITEM:NORMal
:DATAout:ITEM:SUM          :EXTernalin[CH]:RANGe
:FREQuency[CH]:RANGe       :INTEGrate:STARt
:INTEGrate:STOP            :INTERval:TIME
:LPF[ch]                   :MATH
:MEASure:ITEM:EFFiciency   :MEASure:ITEM:FREQuency
:MEASure:ITEM:EXTernalin   :MEASure:ITEM:INTEGrate
:MEASure:ITEM:LOADfactor   :MEASure:ITEM:NORMal
:MEASure:ITEM:SUM          :RTC:COUNt
:STIMe:STARTtime           :STIMe:STOPTtime
:TIMER:TIME                :TRANsmit:COLumn
:TRANsmit:SEParator        :TRANsmit:TERMinator
:VOLTage[ch]:RANGe
*SRE                       *ESE
*ESE0                      *ESE1
*ESE2                      *ESE[ch]
*ESEF
```

For the integer values as a parameter of the following commands, the decimal fractions are rounded, but for the ":CURRent [channel]:RANGe" command for current range setting in range 0.2A and 0.5 A, the second decimal place is rounded.
The real numbers as a parameter of the following commands are rounded to the fifth decimal place.

```
:SCALe[ch]:CT
:SCALe[ch]:PT
:SCALe[ch]:SC
:EXTernalin[CH]:SCALe
```

The following commands are set to 150 V range.

```
":VOLTage1:RANGe 150"
":VOLTage1:RANGe 150.2"
":VOLTage1:RANGe 1.495E2"
```

For the response data, the format is specified for each commands and the data in specified format is transmitted.

12.3.7 Abbreviation of Compound Commands

When several compound commands have a common head portion, for example :SCAL1:PT and :SCAL1:CT, then, when and only when writing them directly following on from one another, this common portion (:SCAL1: in this example) can be omitted from each command. This common portion is called "the current path", by analogy with the general concept of the current directory in the directory structure of UNIX or MS-DOS, and until it is cleared the analysis of following commands is performed by deeming them to be preceded by the current path which has been curtailed in the interests of brevity. This manner of using the current path is shown in the following example:
Normal expression

```
":SCALe1:CT 5;:SCALe1:PT 10;:SCALe1:SC 100"
```

Abbreviated expression:

```
":SCALe1:CT 5;PT 10;SC 100"
```

This becomes the current path, and can be curtailed from the following commands.

The current path is cleared when the power is turned on, when a system reset is performed by key input, when a colon ":" appears at the start of a command, and when a message terminator is detected.

Messages of standard command form can be executed without relation to the current path. Further, they have no effect upon the current path.
It is not necessary to prefix a colon ":" at the start of headers of simple commands and compound commands. However, in order to prevent confusion with abbreviated forms and mistakes in operation, it is recommended practice always to prefix ":" to headers.

12.3.8 Output Queue

Response messages accumulate in the output queue and are read out as data and cleared by the controller. The output queue is also cleared in the following circumstances:

- When a device clear is issued.
- When the power is turned off and turned on again.
- When the unit is reset by a key press.
- When a query error is generated.

This unit has an output queue of 2000 bytes capacity. If the response messages overflow this limit of 2000 bytes, a query error is generated, and the output queue is cleared. Further, if a new message is received while the output queue still contains data, the output queue is cleared, and a query error is generated.

12.3.9 Input Buffer

The 3193 has an input buffer of 2000 bytes capacity.
Messages which are received are put into this buffer and executed in order. If the data accumulated in this buffer exceeds 2000 bytes the buffer becomes full, and until a space again becomes available in the buffer the GP-IB interface bus goes into the waiting state.

12.3.10 Note on Commands Initiating Events

The following commands initiate events:

```
:HOLD
:PEAKhold
:INTEGrate:STARt
:INTEGrate:STOP
:INTEGrate:RESEt
```

When using these commands, either write each command on a separate line, or follow it with a *WAI command.

12.3.11 Status Model

In its implementation of the serial polling function using service requests, this unit employs the status model specified by IEEE 488.2.
The term "event" refers to any phenomenon which generates a service request.

Generation of service requests

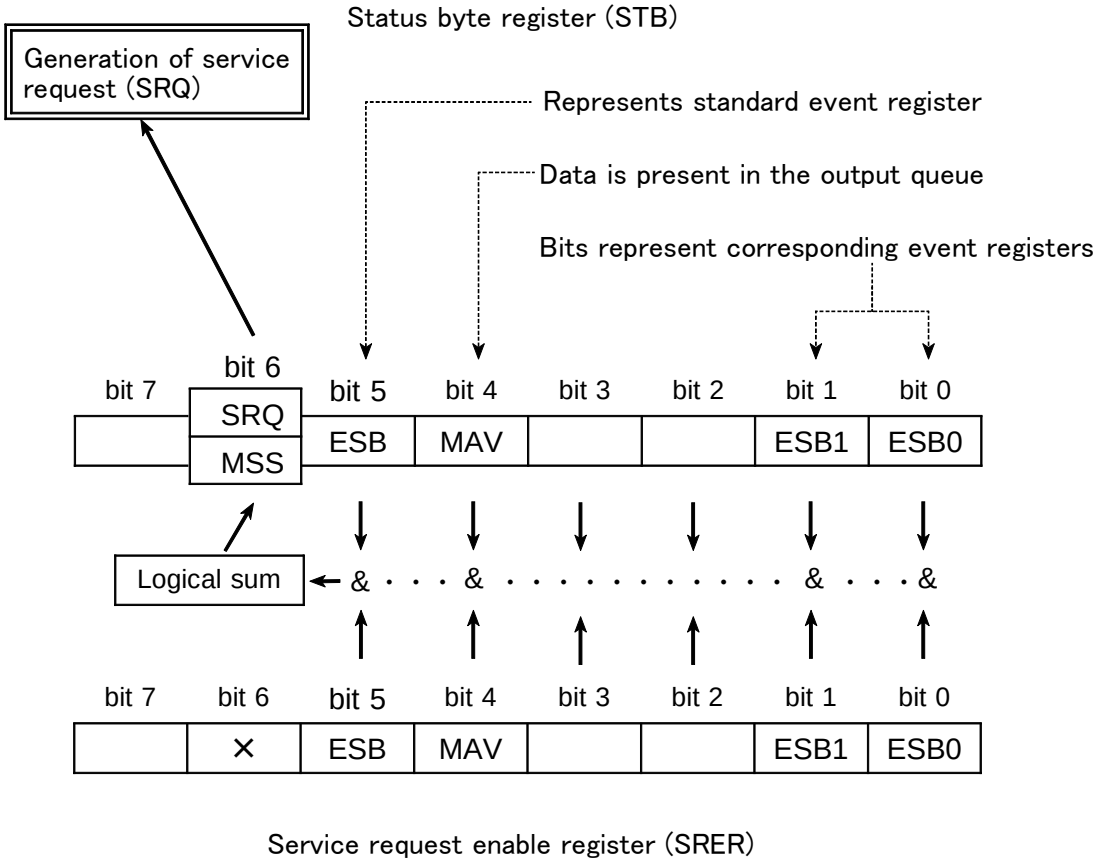

The status byte register holds information relating to the event registers and the output queue. It is further possible to use the service request enable register as a mask to select the items required. If any of the bits selected by the mask becomes 1, bit 6 (the master summary status or MSS bit) is also set to 1, an SRQ message is generated, and this generates a service request.

12.3.12 Status Byte Register

(1) Status byte register (STB)

The status byte register is an 8-bit register whose contents are output from the 3193 to the controller, when serial polling is being performed.
If even only one bit in the status byte register has changed from 0 to 1 (provided that it is a bit which has been set in the service request enable register as a bit which can be used), then the MSS bit is set to 1. Simultaneously with this the SRQ bit is set to 1, and a service request is generated.

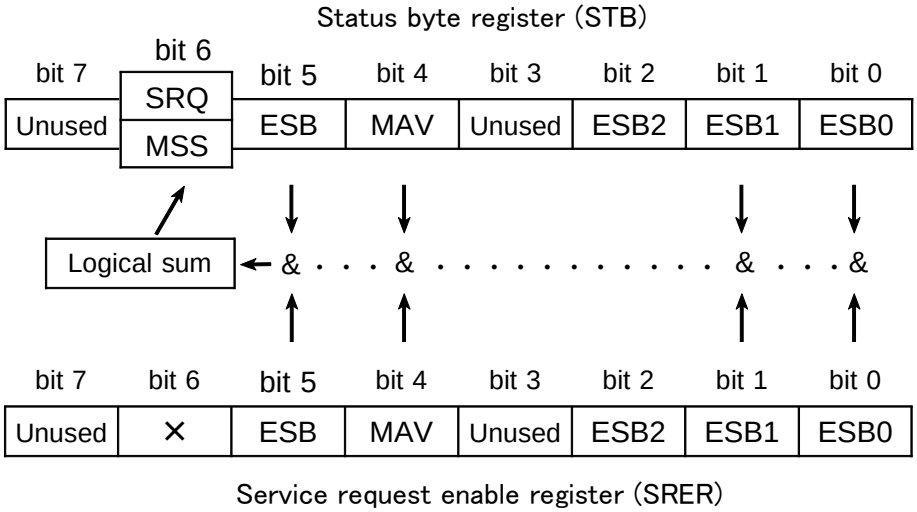

The SRQ bit is synchronized with service requests, and is read out and simultaneously cleared when serial polling is being performed. Although the MSS bit is only read out on an "*STB?" query, on a "*CLS" command for example it is not cleared until the event is cleared.

Status byte register bit assignments

Bit 7	Unused
Bit 6 SRQ	Set to 1 when a service request is dispatched.
MSS	Logical sum of the other bits of the status byte register
Bit 5 ESB	Standard event summary (logical sum) bit Shows a logical sum of the standard event status register.
Bit 4 MAV	Message available Indicates that there is at least one message in the output queue.
Bit 3	Unused
Bit 2 ESB2	Event summary (logical sum) bit2 Shows a logical sum of the standard event status register 2.
Bit 1 ESB1	Event summary bit 1 Bitwise logical sum of event status register 1
Bit 0 ESB0	Event summary bit 0 Bitwise logical sum of event status register 0

(2) Service request enable register (SRER)

This register masks the status byte register. Setting a bit of this register to 1 enables the corresponding bit of the status byte register to be used.

12.3.13 Event Registers

(1) Standard event status register (SESR)

The standard event status register is an 8-bit register. If any bit in the standard event status register is set to 1 (after masking by the standard event status enable register), bit 5 (ESB) of the status byte register is set to 1.

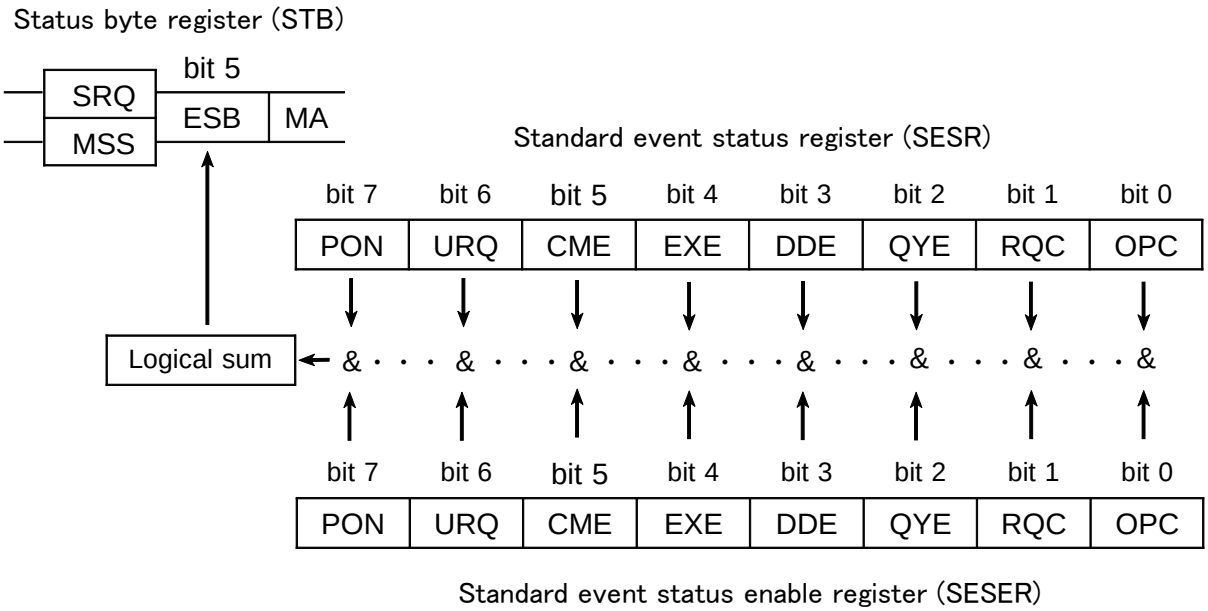

The standard event status register is cleared in the following three situations:
① When a "*CLS" command is received.
② When an "*ESR?" query is received.
③ When the unit is powered on.

(2) Standard event status enable register (SESER)

Setting any bit of the standard event status enable register to 1 enables the corresponding bit of the standard event status register to be accessed.

Standard event status register (SESR) bit assignments

Bit 7 PON	Power on flag. When the power is turned on, or on recovery from a power cut, this bit is set to 1.
Bit 6 URQ	User request. Not used by the 3193.
Bit 5 CME	Command error. When a command which has been received contains a syntactic or semantic error, this bit is set to 1. ・There is a mistake in a program header. ・The number of data parameters is wrong. ・The format of the parameters is wrong.
Bit 4 EXE	Execution error. When for some reason a command which has been received cannot be executed, this bit is set to 1. ・The designated data value is outside the set range. ・The designated data value is not acceptable. ・Some other function is being performed (during holding and integrating).
Bit 3 DDE	Device dependent error. When a command cannot be executed due to some cause other than a command error, a query error, or an execution error, this bit is set to 1. ・Execution is impossible due to an abnormality inside the 3193.
Bit 2 QYE	Query error. This bit is set to 1 when a query error is detected by the output queue control. ・When an attempt has been made to read the output queue when it is empty. ・When the data overflows the output queue. ・When data in the output queue has been lost.
Bit 1 RQC	Request for controller authority. Not used by the 3193.
Bit 0 OPC	Operation terminated. This bit is set to 1 when an "*OPC" command is executed, when the operation of all the messages up to the "*OPC" command has been completed.

(3) Event status registers specific to this unit (ESR0, ESR1, ESR2)

This unit has three event status registers, and three corresponding event status enable registers.
The event status registers are numbered 0 to 2, and are each 8-bit registers; they correspond to bits ESB0 to ESB3 of the status byte.
Each bit has a particular 3193 event allocated to it. The constituent bits are masked by the corresponding event status enable register, then the summary (logical OR) is copied to one of bits 0 to 2 (ESB0- ESB2) of the status byte (STB).

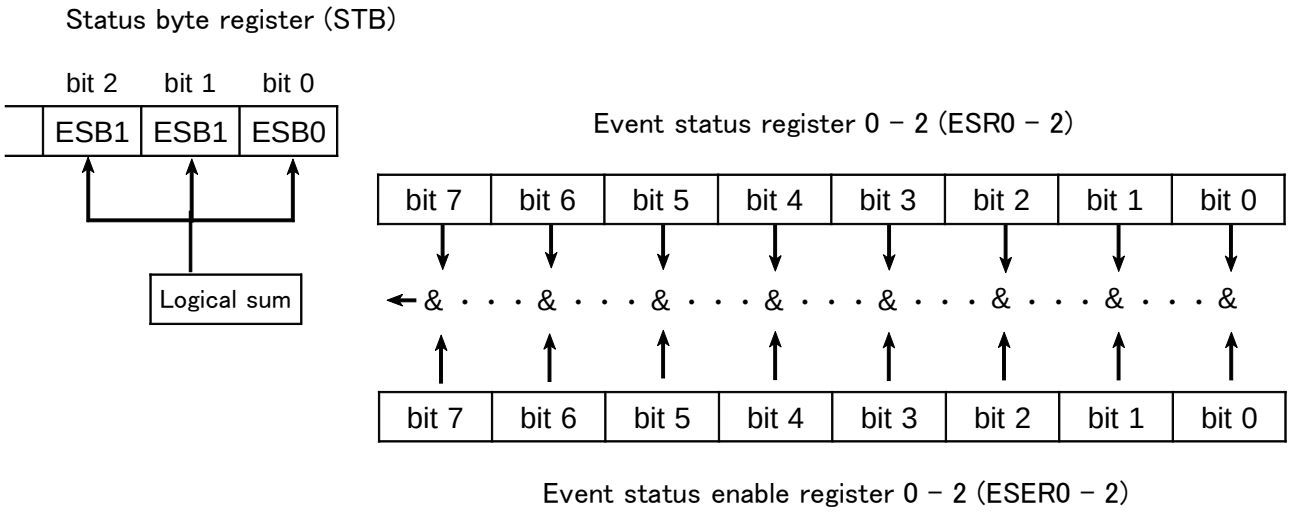

Each event status register has a corresponding event status enable register (mask), and the individual bits in this register can be set by the user, to mask the events.
The event status registers are cleared in the following three cases:
1. The "*CLS" command is received.
2. The contents are read by a "*ESR0?" to "*"ESR2?" query.
3. When the unit is powered on.

NOTE

All registers are not backed up by battery.
The data must be set each time the unit is switched on.

(4) Event status registers 0 (ESR0)

This register is used principally to monitor start and stop processing events. The following commands are used for reading the event status register 0, and for setting the event status enable register 0 and for reading it.

Reading event status register 0	*ESR0?
Setting event status enable register 0	*ESE0
Reading event status enable register 0	*ESE0?

Event status register 0 (ESR0)

Bit 7 SE	Sampling End Sampling ended after the end of the sampling count set by the ":RTC:COUNT" command.
Bit 6 ST	Start Time Start time is reached.
Bit 5 PE	Printer Error A printer paper end, head up, or temperature out-of-range status was issued.
Bit 4 FE	Floppy Error A floppy disk write error, read error, or disk full status occurred.
Bit 3 ST	Stop Time Timer and real time processing finished.
Bit 2 IE	Interval End Interval finished.
Bit 1 CE	Clamp Error The clamp was disconnected or connected, or an operation failure occurred.
Bit 0	Unused

(5) Event status registers 1 (ESR1)

This register is used to monitor the input units for out of range values.
Bits 1 to 6 correspond to channels 1 to 6.

The bits are summaries of the event status registers 11 to 16 (ESR11 to ESR16), which show the out-of-range information for each input unit.
The bit 0 is summary of the event status register F (ESRF), which shows the out-of-range information for frequency.

The following commands are used for reading the event status register 0, and for setting the event status enable register 1 and for reading it.

Reading event status register 1	*ESR1?
Setting event status enable register 1	*ESE1
Reading event status enable register 1	*ESE1?

Event status register 1 (ESR1)

Bit 7	Unused
Bit 6 O6	Channel 6 out of range Indicates summary of ESR16, which shows the out-of-range for channel 6 input unit.
Bit 5 O5	Channel 5 out of range Indicates summary of ESR15, which shows the out-of-range for channel 5 input unit.
Bit 4 O4	Channel 4 out of range Indicates summary of ESR14, which shows the out-of-range for channel 4 input unit.
Bit 3 O3	Channel 3 out of range Indicates summary of ESR13, which shows the out-of-range for channel 3 input unit.
Bit 2 O2	Channel 2 out of range Indicates summary of ESR12, which shows the out-of-range for channel 2 input unit.
Bit 1 O1	Channel 1 out of range Indicates summary of ESR11, which shows the out-of-range for channel 1 input unit.
Bit 0 OF	Frequency input over Indicates summary of ESRF, which shows the out-of-range of frequency.

(6) Event status registers 2 (ESR2)

This register monitors for out-of-range inputs to the 9605 harmonic analysis/flicker measurement unit. Its value is therefore all zeros unless the optional 9605 is installed.
Bits 1 to 6 correspond to the harmonic analysis boards for channels 1 to 6. However, since a maximum of three harmonic analysis boards can be selected simultaneously, no more than three bits can ever be set.

The bits are summaries of the event status registers 21 to 26 (ESR21 to ESR26), which show the out-of-range information for each input unit.

The following commands are used for reading the event status register 0, and for setting the event status enable register 2 and for reading it.

Reading event status register 2	*ESR2?
Setting event status enable register 2	*ESE2
Reading event status enable reister 2	*ESE2?

Event status register 2 (ESR2)

Bit 7	Unused
Bit 6 O6	9605 channel 6 out of range Indicates summary of ESR26, which shows the out-of-range input for the 9605 channel 6
Bit 5 O5	9605 channel 5 out of range Indicates summary of ESR25, which shows the out-of-range input for the 9605 channel 5
Bit 4 O4	9605 channel 4 out of range Indicates summary of ESR24, which shows the out-of-range input for the 9605 channel 4
Bit 3 O3	9605 channel 3 out of range Indicates summary of ESR23, which shows the out-of-range input for the 9605 channel 3
Bit 2 O2	9605 channel 2 out of range Indicates summary of ESR22, which shows the out-of-range input for the 9605 channel 2
Bit 1 O1	9605 channel 1 out of range Indicates summary of ESR21, which shows the out-of-range input for the 9605 channel 1
Bit 0	Unused

(7) Event status registers 11 to 26 (ESR11 to 26)

These registers are event status registers indicating out-of-range inputs for input unit channels 1 to 6 and harmonic analysis board input channels 1 to 6. A summary of these registers is reflected in ESR1 and ESR2.
The following commands are used for reading the event status register, and for setting the event status enable register and for reading it.

Reading event status register (ch)	*ESR(ch)?
Setting event status enable register (ch)	*ESE(ch)
Reading event status enable reister (ch)	*ESE(ch)?

Event status register (ESR1 (ch))

Bit 7	Unused
Bit 6	Unused
Bit 5 OA	OVER-A Current crest factor out of range
Bit 4 OV	OVER-V Voltage crest factor out of range
Bit 3	Unused
Bit 2 HW	HIGH-W Power input out of range
Bit 1 HA	HIGH-A Current input out of range
Bit 0 HV	HIGH-V Voltage input out of range

(8) Event status register F (ESRF)

This register is an event status register indicating out-of-range inputs for frequency inputs.
A summary of this register is reflected in bit OF of ESR1.
The following commands are used for reading the event status register, and for setting the event status enable register and for reading it.

Reading event status register F	*ESRF?
Setting event status enable register F	*ESEF
Reading event status enable reister F	*ESEF?

Event status register (ESRF)

Bit 7	Unused
Bit 6	Unused
Bit 5	Unused
Bit 4	Unused
Bit 3 OC	Frequency channel C out of range
Bit 2 OB	Frequency channel B out of range
Bit 1 OA	Frequency channel A out of range
Bit 0	Unused

12.3.14 GP-IB Commands

The following commands are used for performing interface functions:

Command	Function
GTL	Go To Local The remote state is canceled, and the system goes into the local state.
LLO	Local Lock Out All keys, including the LOCAL key, become inoperable.
DCL	Device CLear Clears the input buffer and the output queue.
SDC	Selected Device Clear Clears the input buffer and the output queue.
GET	Group Execute Trigger During the hold condition, performs single-shot sampling processing.

12.4 Command Reference

Common command: see Section 12.4.1 / Specific command : see Section 12.4.2

:Command

■ Indicates functions of message reference

Syntax : Indicates the command syntax.

[ ] : (Header portion)
Indicates channel number or number of display items.

< > : (Data portion)
Indicates the data format for a command that includes data.

Response syntax : Indicated only for commands for which a response message is returned.

Example : Shows a simple example illustrating the usage of the command. All transmissions are indicated in "short form."

Function : Describes the function of the command.

Note : Describes points that require special attention when using the command.

Error : Indicates the what kinds of errors might occur.

<*A*>: display items (see below)
<*NR1*>: integer data

NOTE
" " in the syntax indicates a space.
"( )", "< >" marks should not be input.

Display items indicated as <*A*>

Display items	Character data <A>
Voltage (U)	U1 to U6, U12, U34, U45, U56, U123, U456
Current (I)	I1 to I6, I12, I34, I45, I56, I123, I456
Active power (P)	P1 to P6, P12, P34, P45, P56, P123, P456
Apparent power (S)	S1 to S6, S12, S34, S45, S56, S123, S456
Reactive power (Q)	Q1 to Q6, Q12, Q34, Q45, Q56, Q123, Q456
Power factor (λ)	PF1 to PF6, PF12, PF34, PF45, PF56, PF123, PF456
Phase angle (φ)	DEG1 to DEG6, DEG12, DEG34, DEG45, DEG56, DEG123, DEG456
Frequency (f)	FA, FB, FC
Integration current (+Ih) (−Ih) (Ih)	PIH1 to PIH6 MIH1 to MIH6 IH1 to IH6
Integration power (+WP) (−WP) (WR)	PWP1 to PWP6, PWP12, PWP34, PWP45, PWP56, PWP123, PWP456 MWP1 to MWP6, MWP12, MWP34, MWP45, MWP56, MWP123, MWP456 WP1 to 6, WP12, 34, 45, 56, WP123, 456
Load factor (LF)	LF1 to 6, LF12, 34, 45, 56, LF123, 456
Peak value (|Up|, |Ip|)	PK1 to 6(Only U or I can be selected for a unit)
Motor power (Pm)	PM
External (EXT)	EXTA, EXTB
Efficiency (η)	EFF1, EFF2, EFF3

The settings by the following commands are not backed up by the batteries.
When powering on, the settings are reset. It is necessary to set again.

Commands	Reset	Commands	Reset
HEADer	OFF	:TRANsmit:SEParator	0(;)
RS232c:ANSWer	OFF	:TRANsmit:TERMinator	1(CR+LF)
RS232c:HANDshake	OFF	:TRANsmit:COLumn	0 (leading zero is omitted from the mantissa)
*ESE, *ESE0, *ESE1, *ESE2, *SRE, *ESE [ch], *ESEF			0

12.4.1 Standard Command

*CLS

■ Clears the status byte register and the event registers.

Syntax ***CLS**

Function This instruction clears the event registers and the bits of the status byte register associated with that register (ESR, ESR0, ESR1, ESR2, ESR[ch], ESRF).

Note This has no effect upon the output queue, the various enable registers, or bit 4 (the MAV bit) of the status byte register.

*ESE

■ Sets the standard event status enable register.

Syntax ***ESE** <NR1>
<NR1> = 0 to 255

Example
Transmission ***ESE 48**
Bits 5 and 4 of SESER are set to 48.
32+16=48

Function Sets the mask pattern of the standard event status enable register (SESER) to a value (0 to 255).

128	64	32	16	8	4	2	1
bit 7	bit 6	bit 5	bit 4	bit 3	bit 2	bit 1	bit 0
PON	URQ	CME	EXE	DDE	QYE	RQC	OPC

Note When the power is turned on, and when a reset has taken place upon key input, the data is reinitialized to 0.

Error Execution error / If the setting data is out of the range.

*ESE?

■ Queries the standard event status enable register (SESER).

Syntax ***ESE?**

Response syntax

(Headers: ON)	(Headers: OFF)
***ESE** <NR1>	<NR1>

Example
Transmission ***ESE?**
Response ***ESE 36** **36**
The data format is same as *ESE

Function The contents of SESER as set by the *ESE command are returned as a NR1 value (0 to 255).

Note If any error occurs, no response message to this query is produced.

Error Query error / If the response message is longer than 2000 bytes

*ESE0

■ Sets the event status enable register 0.

Syntax ***ESE0** <NR1>
<NR1> = 0 to 255

Example
Transmission ***ESE0 34**
Bits 5 and 1 of ESER0 are set to 34.
32+2=34

Function Sets the mask pattern of the event status enable register 0 (ESER0) to a value (0 to 255).

128	64	32	16	8	4	2	1
bit 7	bit 6	bit 5	bit 4	bit 3	bit 2	bit 1	bit 0
SE	ST	PE	FE	SP	IE	CE	

Note When the power is turned on, and when a reset has taken place upon key input, the data is reinitialized to 0.

Error Execution error / If the setting data is out of the range.

*ESE0?

■ Queries the standard event status enable register 0 (SESER0).

Syntax ***ESE0?**

Response syntax Same as *ESE0

(Headers: ON)	(Headers: OFF)
***ESE0** <NR1>	<NR1>

Example
Transmission ***ESE0?**
Response ***ESE0 34** **34**

Function The contents of the event status enable register 0 (ESER0) as set by the *ESE0 command are returned as a NR1 value (0 to 255).

Error Query error / If the response message is longer than 2000 bytes

*ESE1

■ Sets the event status enable register 1.

Syntax ***ESE1** <NR1>
<NR1> = 0 to 255

Example
Transmission ***ESE1 74**
Bits 6 and 3 of ESER1 are set to 74.
64+8=74

Function Sets the mask pattern of the event status enable register 1 (ESER1) to a value (0 to 255).

128	64	32	16	8	4	2	1
bit 7	bit 6	bit 5	bit 4	bit 3	bit 2	bit 1	bit 0
	O6	O5	O4	O3	O2	O1	OF

Note When the power is turned on, and when a reset has taken place upon key input, the data is reinitialized to 0.

Error Execution error / If the setting data is out of the range.

*ESE1?

■ Queries the standard event status enable register 1 (SESER1).

Syntax ***ESE1?**

Response syntax Same as *ESE1

(Headers: ON)	(Headers: OFF)
***ESE1** <NR1>	<NR1>

Example

Transmission ***ESE1?**

Response ***ESE1 74** **74**

Function The contents of the event status enable register 1 (ESER1) as set by the *ESE1 command are returned as a NR1 value (0 to 255).

Error Query error / If the response message is longer than 2000 bytes

*ESE2

■ Sets the event status enable register 2.

Syntax ***ESE2** <NR1>

<NR1> = 0 to 255

Example

Transmission ***ESE2 6**

Bits 2 and 1 of ESER2 are set to 6.
4+2=6

Function Sets the mask pattern of the event status enable register 2 (ESER2) to a value (0 to 255).

128	64	32	16	8	4	2	1
bit 7	bit 6	bit 5	bit 4	bit 3	bit 2	bit 1	bit 0
	O6	O5	O4	O3	O2	O1	

Note When the power is turned on, and when a reset has taken place upon key input, the data is reinitialized to 0.

Error Execution error / If the setting data is out of the range.

*ESE2?

■ Queries the standard event status enable register 2 (SESER2).

Syntax ***ESE2?**

Response syntax Same as *ESE2

(Headers: ON)	(Headers: OFF)
***ESE2** <NR1>	<NR1>

Example

Transmission ***ESE2?**

Response ***ESE2 6** **6**

Function The contents of the event status enable register 2 (ESER2) as set by the *ESE2 command are returned as a NR1 value (0 to 255).

Error Query error / If the response message is longer than 2000 bytes

*ESE [*channel no.*]

■ Sets the standard event status enable registers 11 to 16, 21 to 26.

Syntax ***ESE** [11 - 16 / 21 - 26] <NR1>

11 - 16: when using the input unit for channel 1 to 6

21 - 26: when using the 9605 for channel 1 to 6

<NR1> = 0 to 255

Function Sets the mask pattern of the event status enable registers 11 to 16, 21 to 26 (ESER11 to 16, 21 to 26) of specified channel.

128	64	32	16	8	4	2	1
bit 7	bit 6	bit 5	bit 4	bit 3	bit 2	bit 1	bit 0
		OA	OV		HW	HA	HV

Note When the power is turned on, and when a reset has taken place upon key input, the data is reinitialized to 0.

Error Execution error / If the setting data is out of the range.

*ESE [*channel no.*]?

■ Queries the standard event status enable registers 11 to 16, 21 to 26.

Syntax ***ESE** [11-16 / 21-26]**?**

11 - 16: when using the input unit for channel 1 to 6

21 - 26: when using the 9605 for channel 1 to 6

Function The contents of the ESER 11 to 16, 21 to 26 set by the ESE [channel no.] command are returned as a NR1 value (0 to 255).

*ESEF

■ Sets the event status enable register F.

Syntax ***ESEF** <NR1>

<NR1> = 0 to 255

Example
Transmission ***ESEF 2**

Bit 1 of ESERF is set.

Function Sets the mask pattern of the event status enable register F (ESERF) to a value (0 to 255).

128	64	32	16	8	4	2	1
bit 7	bit 6	bit 5	bit 4	bit 3	bit 2	bit 1	bit 0
				OC	OB	OA	

Note When the power is turned on, and when a reset has taken place upon key input, the data is reinitialized to 0.

Error Execution error / If the setting data is out of the range.

*ESEF?

■ Queries the standard event status enable register F (SESERF).

Syntax ***ESEF?**

Response syntax Same as *ESEF

(Headers: ON)	(Headers: OFF)
***ESEF** <NR1>	<NR1>

Example

Transmission ***ESEF?**

Response ***ESEF 6** **6**

Function The contents of the event status enable register F (ESERF) as set by the *ESEF command are returned as a NR1 value (0 to 255).

Error Query error / If the response message is longer than 2000 bytes

*ESR?

■ Queries out and clears the contents of the standard event status register (SESR).

Syntax ***ESR?**

Response syntax ***ESR** <NR1>
<NR1> = 0 to 255

Example

Transmission ***ESR?**

Response ***ESR 32**

Indicates command error occurs.
(bit5 corresponds to CME.)

Function The contents of SESR are returned as NR1 value (0 to 255).

128	64	32	16	8	4	2	1
bit 7	bit 6	bit 5	bit 4	bit 3	bit 2	bit 1	bit 0
PON	URQ	CME	EXE	DDE	QYE	RQC	OPC

*ESR0?

■ Queries event status register 0 (ESR0).

Syntax ***ESR0?**

Response syntax ***ESR0** <NR1>
<NR1> = 0 to 255

Example

Transmission ***ESR0?**

Response ***ESR0 16**

Indicates FDD error occurs.

Function The contents of ESR0 are returned as NR1 value (0 to 255).

128	64	32	16	8	4	2	1
bit 7	bit 6	bit 5	bit 4	bit 3	bit 2	bit 1	bit 0
SE	ST	PE	FE	SP	IE	CE	

*ESR1?

■ Queries event status register 1 (ESR1).

Syntax ***ESR1?**

Response syntax ***ESR1** <NR1>
<NR1> = 0 to 255

Example

(Header on)	(Header off)
Transmission ***ESR1?**	
Response ***ESR1 14**	**14**

Indicates out-of-range inputs for channel 1, 2, and 3.

Function The contents of ESR1 are returned as NR1 value (0 to 255).
Unless the contents of input unit for each bits are read, they are not cleared.

128	64	32	16	8	4	2	1
bit 7	bit 6	bit 5	bit 4	bit 3	bit 2	bit 1	bit 0
	O6	O5	O4	O3	O2	O1	OF

Error Query error / If the response message is longer than 2000 bytes

*ESR2?

■ Queries event status register 2 (ESR2).

Syntax ***ESR2?**

Response syntax ***ESR2** <NR1>
<NR1> = 0 to 255

Example
Transmission (Header on) ***ESR2?** (Header off)
Response ***ESR2 2** **2**

Indicates out-of-range inputs for channel 1.

Function The contents of ESR2 are returned as NR1 value (0 to 255).
Unless the contents of the channel for each bits are read, they are not cleared.

128	64	32	16	8	4	2	1
bit 7	bit 6	bit 5	bit 4	bit 3	bit 2	bit 1	bit 0
	O6	O5	O4	O3	O2	O1	

Errors Query error / If the response message is longer than 2000 bytes

*ESR [*channel no.*]?

■ Queries the event status register 11 to 16, 21 to 26.

Syntax ***ESR** [11-16 / 21-26]**?**

Response syntax ***ESR** [11-16 / 21-26] <NR1>
<NR1> = 0 to 255

Example
Transmission ***ESR2?**
Response ***ESR2 1**

Indicates the voltage input over for 2 channels of the input unit. (bit0 HV)

Function The contents of the ESR 11 to 16, 21 to 26 as set by the ESR [channel no.] command are returned as a NR1 value (0 to 255) and cleared.

128	64	32	16	8	4	2	1
bit 7	bit 6	bit 5	bit 4	bit 3	bit 2	bit 1	bit 0
		OA	OV		HW	HA	HV

*ESRF?

■ Queries event status register F (ESRF).

Syntax ***ESRF?**

Response syntax ***ESRF** <NR1>
<NR1> = 0 to 255

Example
Transmission (Header on) ***ESRF?** (Header off)
Response ***ESRF 2** **2**

Indicates out-of-range inputs for channel FA.

Function The contents of ESRF are returned as NR1 value (0 to 255).
Unless the contents of the channel for each bits are read, they are not cleared.

128	64	32	16	8	4	2	1
bit 7	bit 6	bit 5	bit 4	bit 3	bit 2	bit 1	bit 0
				OC	OB	OA	

Errors Query error / If the response message is longer than 2000 bytes

*IDN?

■ Queries device ID.

Syntax **`*IDN?`**

Response syntax (Header: ON/OFF)
<First><Second><Third><Fourth>

First field	Manufacturer's name
Second field	Model name
Third field	Serial No.
Fourth field	Software version

Example
Transmission **`*IDN?`**
Response **`HIOKI,3193,0,V1.00`**

Function
- Queries device ID (manufacturer's name, model name, serial No, software version.

Notes
- The *IDN? query is the last query message in the program messages. Accordingly, if another query is detected after this query, a query error is generated, and no response message after the *IDN? query is produced.
- No header is affixed to the response message.
- If any error occurs, no response message to this query is produced.

Error Query error / If the response message is longer than 2000 bytes

*OPC

■ After all action has been completed during execution, performs an SRQ request.

Syntax **`*OPC`**

Example **`AAA;BBB;CCC;*OPC;DDD`**
After the execution of the "AAA;BBB;CCC" is completed, the bit is ON.

Function
- When a sequence of commands is written in a single line, the *OPC command sets LSB (OPC bit) of SESR when the process of all commands before the *OPC command have completed.
- When this command is received, the measurement data is updated.

*OPC?

■ Queries whether or not all action has been completed during execution.

Syntax **`*OPC?`**

Response syntax After operations are completed,
`"1"`

Function
- The same as the *OPC command, except in that, at the instant that the previous commands have been completed, instead of bit 0 (the OPC bit) of the standard event status register (SESR) being set to 1, the response message "1" is returned.
- When this command is received, the measurement data is updated.

Notes
- With this query, if any error occurs, no response message is produced.
- No header is affixed to the response message.

*OPT?

■ Queries the device option provision.

Syntax ***OPT?**

Response syntax

Headers ON/OFF
<1><2><3>...<15>

Field
1: channel 1 input unit
2: sensor connected to channel 1
3: channel 2 input unit
4: sensor connected to channel 2
5: channel 3 input unit
6: sensor connected to channel 3
7: channel 4 input unit
8: sensor connected to channel 4
9: channel 5 input unit
10: sensor connected to channel 5
11: channel 6 input unit
12: sensor connected to channel 6
13: 9603 External signal input unit
14: 9604 Printer unit
15: 9605 Harmonic analysis, Flicker analysis units

Example

Transmission
***OPT?**

Response
9600,0,9600,0,9601,0,9601,0,9602,9279,9602,9279,9603,9604,9605

Function Queries the device option provision.

Notes
- No header is affixed to the response message.
- If the unit is not present, "0" is returned.
- *OPT? query to which current sensor is connected will be returned as shown below.

Current sensor connected	Response syntax
9270, 9272/9272-10 (20 A)	9270
9271, 9272/9272-10 (200 A)	9271
9277	9277
9278, CT6863	9278
9277	9279
9278, CT6863	CT6862

*RST

■ Initializes the settings.

Syntax ***RST**

Function
- Resets the 3193 unit.
- The parameters which are reset are initialized by the reset function of the unit. The following settings are not affected by this command. The current path is initialized to the root, and headers are turned off.
- GP-IB address
  Input buffer
  Output que
  Event register
  Enable registers(SRER,SESER,ESER0-2, ESER[ch], ESERF)

*SRE

■ Sets the service request enable register (SRER).

Syntax ***SRE** <NR1>
<NR1> = 0 to 255

Example
Transmission ***SRE 34**
Bits 1 and 5 of SRER are set to 1.

Function
- Sets the SRER to a pattern is used to mask the status byte register.
- SRER has the bit configuration shown below, and an NR1 value is set with this encoded as a value from 0 to 255.

128	64	32	16	8	4	2	1
bit 7	bit 6	bit 5	bit 4	bit 3	bit 2	bit 1	bit 0
		ESB	MAV	ESB3	ESB2	ESB1	ESB0

Notes
- When the power is turned on, and when a reset has taken place upon key input, the data is reinitialized to 0.
- The setting of bit 6 is ignored.

Error Execution error / If the setting data is out of the range.

*SRE?

■ Queries the service request enable register (SRER).

Syntax ***SRE?**

Response syntax

(Header ON)	(Header OFF)
***SRE** <0-255>	<0-255>

Example

	(Header ON)	(Header OFF)
Transmission	***SRE?**	
Response	***SRE 34**	**34**

Function
- Returns the value of the service request enable register (SRER) set by the *SRE command as a numerical data value in NR1 format taken from the set: 0 to 63, 128 to 191.
- The value of bit 6 is always 0.

Note With this query, if any error occurs, no response message is produced.

Errors Query error / If the response message is longer than 2000 bytes

*STB?

■ Queries the status byte register.

Syntax ***STB?**

Response syntax (Header ON/OFF)
***STB** <NR1>
<NR1> = 0 to 255

Example

	(Header ON)	(Header OFF)
Transmission	***STB?**	
Response	***STB 32**	**32**

Indicates any event occurs in the standard event status register

Function
- Returns the set contents of the status byte register (STB) as a numerical data value in NR1 format (0 to 255).

128	64	32	16	8	4	2	1
bit 7	bit 6	bit 5	bit 4	bit 3	bit 2	bit 1	bit 0
Unused	MSS	ESB	MAV	Unused	ESB2	ESB1	ESB0

Notes
- Bit 6 is the MSS bit.
- Even if service requests are cleared by serial polling, the MSS bit is not cleared.

Error Query error / If the response message is longer than 2000 bytes

*TRG

■ Request for sampling

Syntax ***TRG**

Function
- Same operation as the :HOLD command.
- If the system is currently in the hold state, performs sampling once.

*TST?

■ Requests execution of, and queries the result of, the self test.

Syntax ***TST?**

Response syntax (Header ON/OFF)
<NR1>
<NR1> = 0 to 31

Example
Transmission ***TST?**
Response **20**
(Input unit error + printer error)

Function Causes the 3193 to perform the self test, and returns the result thereof as a numerical data value in NR1 format (0 to 31).

128	64	32	16	8	4	2	1
bit 7	bit 6	bit 5	bit 4	bit 3	bit 2	bit 1	bit 0
			Printer error	RTC error	Input unit error	RAM error	ROM error

- Input unit error:
  no sensor of the clamp unit, no unit for channel 1
- RTC error:
  internal clock abnormal
- Printer error:
  no printer paper, head-up, temperature out of range

Note
- No header is affixed to the response message.

*WAI

■ Waits until sampling is fully completed.

Syntax ***WAI**

Example **:VOLT1:RANG 150;:RESP SLOW;*WAI;:MEAS? U1,I1**
After operation for voltage range and response, the :MEAS? command is executed.

Function When a sequence of commands is written in a single line, the process waits until all commands before the *WAI command have completed before continuing with the following commands.

12.4.2 Specific Commands

:AOUT

■ Sets the items of D/A output.

Syntax **AOUT** <A, ...8 items>

<A> = U*n*, I*n*, P*n*, Q*n*, S*n*, PF*n*, DEG*n*, PIH*n*, MIH*n*, IH*n*, PWP*n*, MWP*n*, WP*n*, LF*n*, FA, FB, FC, EFF1, EFF2, EFF3, EXTA, EXTB, PM, PK1, PK2, PK3, PK4, PK5, PK6

n: 1 - 6 (channel 1 to 6), 12 (channels 1 and 2), 34 (channels 3 and 4), 45 (channels 4 and 5), 56 (channels 5 and 6), 123 (channels 1, 2, and 3), 456 (channels 4, 5, and 6) (depends on combination of channels)

Example **:AOUT PF1,S2,FA**

D/A output channel 1 is assigned to PF1 (power factor calculated from input unit channel 1), D/A output channel 2 is assigned to S2 (apparent power calculated from input unit channel 2), and D/A output channel 3 is assigned to FA (frequency calculated from input unit channel 1).

Function Sets the output items for channels 1 to 8 respectively of the D/A outputs
The D/A output item which is not specified is set to *U*1.

Errors
- Execution error / If the setting data is an item which cannot be selected because of the number of input units.
- Command error / If the setting data is not character data listed on the left.

Note
U: Voltage
I: Current
P: Active power
Q: Reactive power
S: Apparent power
PF: Power factor
DEG: Phase angle
IH: Integration current
(PIH: positive, MIH:negative)
WP: Integration power
(PWP: positive, MWP: negative)
LF: Load factor
F: Frequency
EFF: Efficiency
EXT: External-In
PM: Motor power
PK: Peak value

AOUT?

■ Queries which the items of D/A output is to be performed

Syntax **AOUT?**

Response syntax Same as the :AOUT command.
AOUT <A, ...(8 items)>

Example
Transmission **AOUT?**
Response **AOUT PF1,S2,FA,U1,U1,U1,U1,U1**

Function Returns the D/A output items as character data.

Note With this query, if any errors occurs, no response message is produced.
The D/A output item which is not specified is set to *U*1.

:AVEraging:COEFficient

■ Sets the averaging or attenuation coefficient.

Syntax **:AVEraging:COEFficient** <NR1>
<NR1> = 8, 16, 32, 64

Example
Transmission **AVERAGING:COEFFICIENT?**
Response **AVERAGING:COEFFICIENT 16**

Function Sets the averaging or attenuation coefficient for the sliding average or exponential average function.

:AVEraging:COEFficient?

■ Queries the averaging or attenuation coefficient.

Syntax **:AVEraging:COEFficient?**

Response syntax **:AVERAGING:COEFFICIENT** <NR1>
<NR1> = 8, 16, 32, 64

Example
Transmission **AVERAGING:COEFFICIENT?**
Response **AVERAGING:COEFFICIENT 8**

Function Sets the averaging or attenuation coefficient for the sliding average or exponential average function.

:AVEraging:MODE

■ Set the averaging mode

Syntax **:AVEraging:MODE** <TIM/LIN/EXP/OFF>
TIM: time averaging
LIN: moving averaging
EXP: exponential averaging

Example **:AVERAGING:MODE EXP**
Set the averaging mode to exponential.

Function Selects the averaging mode.

:AVEraging:MODE?

■ Queries the averaging mode

Syntax **:AVEraging:MODE?**

Response syntax **:AVERAGING:MODE** <TIM/LIN/EXP/OFF>

Example
Transmission **:AVERAGING:MODE?**
Response **:AVERAGING:MODE EXP**

Function Queries the current setting for averaging mode.

:AVEraging?

■ Queries the averaging.

Syntax **:AVEraging?**

Response syntax **:AVERAGING:MODE** <TIM/LIN/EXP/OFF>**:COEFFICIENT** <8/16/32/64>

Example
Transmission
Response

:AVERAGING?
:AVERAGING:MODE EXP:COEFFICIENT 8
When time averaging is selected.
:AVERAGING:MODE TIM:COEFFICIENT 0

Function Queries the current setting for averaging mode, averaging, or attenuation coefficient.

:BACKlight

■ Enables or disables the LCD back light.

Syntax **:BACKlight** <ON/OFF>

Example **:BACKLIGHT ON**
Turns on the backlight.

Function Enables or disables backlight.

:BACKlight?

■ Queries the LCD backlight setting.

Syntax **:BACKlight?**

Response syntax **:BACKLIGHT** <ON/OFF>**;AUTO** <1-99>

Example
Transmission
Response

:BACKLIGHT?
:BACKLIGHT:ON;AUTO 10

Function Queries the current settings for backlight.

:BACKlight:AUTO

■ Automatic LCD backlight off time setting

Syntax **:BACKlight:AUTO** <NR1>
<NR1>= 0, 1 - 99 (minutes)
0: automatic backlight function is off

Example **:BACKLIGHT:AUTO 10**
Turns off the backlight after 10 minutes.

Function Sets the automatic LCD backlight off time (1 to 99 minutes).

:BACKlight:AUTO?

■ Queries the automatic LCD backlight off time setting.

Syntax **:BACKlight:AUTO?**

Response syntax **:BACKLIGHT:AUTO** <1-99>

Example
Transmission **:BACKLIGHT:AUTO?**
Response **:BACKLIGHT:AUTO 10**

Function Queries the current setting for auto-off time.

:BEEPer

■ Enables and disables beep sound.

Syntax **:BEEPer** <ON/OFF>

Example **:BEEPER ON**
Sets the beep sound to on.

Function Enables or disables the beep sound.

:BEEPer?

■ Queries the beep sound setting.

Syntax **:BEEPer?**

Example **:BEEPER?**
:BEEPER ON

Function Queries the current setting of beep sound enablement.

:CALCulate [*channel no.*] :DENominator

■ Sets the items for the denominator in the specified efficiency formula.

Syntax **:CALCulate** [1/ 2/ 3]
:DENominator <A,..(up to 4 items)>
1: η 1, 2: η 2, 3: η 3
<A> = P1 - P6, P12, P34, P56, P123, P456, Pm

Example **:CALCULATE1:DENOMINATOR P1,P2**
Set the denominator of formula 1 for efficiency calculation (η 1) to include P1 and P2.

Function Sets the items for the denominator in the specified efficiency formula.
Up to four items can be selected.

:CALCulate [*channel no.*] :DENominator?

■ Queries the items for the denominator in the specified efficiency formula.

Syntax **:CALCulate** [1/ 2/ 3] **:DENominator?**
1: η 1, 2: η 2, 3: η 3

Response syntax **:CALCULATE**[1/2/3]**:DENOMINATOR** <A>

Example
Transmission **:CALCULATE1:DENOMINATOR?**
Response **:CALCULATE1:DENOMINATOR P1,P2**

Function Queries the items set for the denominator in the specified efficiency formula.

:CALCulate [*channel no.*] :NUMerator

■ Set items for the numerator in the specified efficiency formula.

Syntax **:CALCulate** [1/ 2/ 3] **:NUMerator** <A,.. (up to 4 items)>
1: η 1, 2: η 2, 3: η 3
<A> = P1 - P6, P12, P34, P56, P123, P456, PM

Example **:CALCULATE:NUMERATOR1 P1,P2**
Set the numerator of formula 1 for efficiency calculation (η 1) to include P1 and P2.

Function Set items for the numerator in the specified efficiency formula.
Up to four items can be selected.

:CALCulate [*channel no.*] :NUMerator?

■ Queries items for the numerator in the specified efficiency formula.

Syntax **:CALCulate** [1/ 2/ 3]**:NUMerator?**
1: η 1, 2: η 2, 3: η 3

Response syntax **:CALCULATE**[1/ 2/ 3]**:NUMERATOR** <A>

Example
Transmission **:CALCULATE1:NUMERATOR?**
Response **:CALCULATE1:NUMERATOR P1,P2**

Function Queries the items set for the numerator in the specified efficiency formula.

:CALCulate [*channel no.*]?

■ Queries the settings for the efficiency formula.

Syntax **:CALCulate**[1/ 2/ 3]**?**

Response syntax **:CALCULATE**[1/ 2/ 3]**:DENOMINATOR** <A,.. (4 items)>**:NUMERATOR** <A,..(4 items)>
1: η 1, 2: η 2, 3: η 3

Example
Transmission **:CALCULATE1?**
Response **:CALCULATE1:DENOMINATOR P1; NUMERATOR P2**
The current setting formula is
η 1=P1/P2×100

Function Queries the settings for the specified efficiency formula.

:CLOCK

■ Sets the real time (system clock).

Syntax **:CLOCK** <year,month,day,hour,min, sec>
year = 00 - 99
month = 1 - 12
day = 1 - 31
hour = 0 - 23
min = 0 - 59
sec = 00
(Data in NR1 format)

Example **:CLOCK 97,12,15,17,00,00**
Sets the internal clock to 15th, 12, 1997, 17:00:00.

Function Sets the current setting (date and time, in yy-mm-dd-hh-mm-ss format) of the 3193 system clock.
It is not possible to set time in RS-232C mode.

Note The number of days in each month and leap years are calculated automatically; as a result, entering a non-existent date causes an execution error.
Set the second to 0.

:CLOCK?

■ Queries the real time (system clock).

Syntax **:CLOCK?**

Response syntax **:CLOCK** <year,month,day,hour,min,sec>

Example
Transmission **:CLOCK?**
Response **:CLOCK 97,12,15,17,00,00**

Function Queries the current setting (date and time, in yy-mm-dd-hh-mm-ss format) of the 3193 system clock.

:COUPling [*channel no.*]

■ Sets the coupling mode.

Syntax **:COUPling** [1 - 6] <AC/DC/ACDC>

Example **:COUPLING4_ACDC**
Sets the coupling mode for channel 4 of the input unit to ACDC (AC+DC).

Function Sets the coupling mode of the specified input unit.

Note When using an input unit for which DC or AC+DC cannot be selected, specifying DC or ACDC results in an execution error.

:COUPling [*channel no.*]?

■ Queries the coupling mode.

Syntax **:COUPling** [1 - 6]**?**

Response syntax **:COUPLING**[1 - 6] <AC/DC/ACDC>

Example
Transmission **:COUPLING1?**
Response **:COUPLING1 ACDC?**

Function Queries the coupling mode of the specified input unit.

:CURRent [*channel no.*]:AUTO

■ Enables or disables the current auto ranging.

Syntax **:CURRent** [1 - 6]**:AUTO** <ON/OFF>

Example **:CURRENT1:AUTO ON**
Sets the current range for channel 1 of the input unit to auto ranging.

Function Switch current auto ranging on or off for the specified input unit.

Note In 1P3W mode or above, for the channel specification, enter the number of the lowest-numbered channel in the combination. For example, when using input unit channels 1 to 3 in 3V3A mode, specify "1".

:CURRent [*channel no.*] :AUTO?

■ Queries the current auto ranging.

Syntax **:CURRent** [1 - 6]**:AUTO?**

Response syntax **:CURRENT** [1 - 6]**:AUTO** <ON/OFF>

Example
Transmission **:CURRENT1:AUTO?**
Response **:CURRENT1:AUTO ON**

Function Queries the current ranging on or off for the specified input unit.

:CURRent [*channel no.*] :MEAN

■ Sets the rectifier type of current ranging.

Syntax **:CURRent** [1 - 6]**:MEAN** <ON/OFF>

Example **:CURRENT1:MEAN ON**

Sets the rectifier type of current ranging for channel 1 of the input unit to MEAN.

Function Sets the rectifier type (MEAN/RMS) of current ranging for the specified input unit

Note If DC is selected in the COUPling command, an execution error occurs.

:CURRent [*channel no.*] :MEAN?

■ Queries the rectifier type of current ranging.

Syntax **:CURRent** [1 - 6]**:MEAN?**

Response syntax **:CURRENT** [1 - 6]**:MEAN** <ON/OFF>

Example

Transmission **:CURRENT1:MEAN?**

Response **:CURRENT1:MEAN ON**

Function Queries the rectifier type of current ranging for the specified input unit.

:CURRent [*channel no.*] :RANGe

■ Sets the current ranging.

Syntax **:CURRent** [1 - 6]**:RANGe** <NR1>

<NR1> =
When using the 9600, 9601:
0.2, 0.5, 1, 2, 5, 10, 20, 50
When using the 9602 and 20 A sensor:
0.5, 1, 2, 5, 10, 20
When using the 9602 and CT6862:
1.25, 2.5, 5, 12.5, 25, 50
(CT ratio=2.5)
0.5, 1, 2, 5, 10, 20
(CT ratio=other than 2.5)
When using the 9602 and 200 A sensor:
5, 10, 20, 50, 100, 200
When using the 9602 and 500 A sensor:
10, 20, 50, 100, 200, 500

Example **:CURRENT1:RANGE 50**

Sets the current range for channel 1 of the input unit to 50 A.

Function Sets the current ranging of the specified input unit.

Note In 1P3W mode or above, for the channel specification, enter the number of the lowest-numbered channel in the combination. For example, when using input unit channels 1 to 3 in 3V3A mode, specify "1".

Error Execution error / If the value which can not be specified is selected depending on input unit

:CURRent [*channel no.*] :RANGe?

■ Queries the current ranging.

Syntax **:CURRent[**1 - 6**]:RANGe?**

Response syntax **:CURRENT[**1 - 6**]:RANGE** <NR1>

Example
Transmission **:CURRENT1:RANGE?**
Response **:CURRENT1:RANGE 50**

Function Queries the current ranging of the specified input unit.

:CURRent [*channel no.*]?

■ Queries the current measurement.

Syntax **:CURRent** [1 - 6]**?**

Response syntax **:CURRENT**[1 - 6]**:AUTO <**ON/OFF**>;**
MEAN <ON/OFF**>;RANGE** <NR1>

Example
Transmission **:CURRENT1?**
Response **:CURRENT1:AUTO ON;MEAN ON;RANGE 10**

Function Queries the current settings for the specified input unit.

:DATAout?

■ Queries the all setting items on a FDD or printer.

Syntax **:DATAout?**

Response syntax
```
:DATAOUT:ITEM:
 NORMAL <0-63 (8 items)>;
 SUM <0-63 (7 items)>;
 INTEGRATE <0-63 (10 items)>;
 FREQUENCY <0-7>;
 LOADFACTOR <0-64 (2 items)>;
 EFFICIENCY <0-7>;
 EXTERNALIN <0-7>;
 FD <ON/OFF>;
 PRINTER <ON/OFF>
```

Example
Transmission **:DATAOUT:ITEM?**
Response
```
:DATAOUT:ITEM:NORMAL 7,7,0,0,0,
 0,0,0;SUM 8,8,8,8,8,8,8,0;
 INTEGRATE 0,0,7,0,0,0,8,8,8,1;
 FREQUENCY 1;LOADFACTOR 0,8;
 EFFICIENCY 1;EXTERNALIN 7;
 FD ON;PRINTER OFF
```

Function Queries the all setting items on a FDD or printer.

:DATAout:ITEM?

■ Queries the items to be output to the floppy disk drive or printer.

Syntax **:DATAout:ITEM?**

Response syntax
```
:DATAOUT:ITEM:
 NORMAL <0-63 (8 items)>;
 SUM <0-63 (7 items)>;
 INTEGRATE <0-63 (10 items)>;
 FREQUENCY <0-7>;
 LOADFACTOR <0-64 (2 items)>;
 EFFICIENCY <0-7>;
 EXTRNALIN <0-7>
```

Example
```
:DATAOUT:ITEM?
:DATAOUT:ITEM:
 NORMAL 7,7,0,0,0,0,0,0;
 SUM 8,8,8,8,8,8,8;
 INTEGRATE 0,0,7,0,0,0,8,8,8,1;
 FREQUENCY 1;LOADFACTOR 0,8;
 EFFICIENCY 1;EXTRNALIN 7
```

Function Queries the items to be output to the floppy disk drive or printer.

:DATAout:ITEM:ALLClear

■ Clears all output items.

Syntax **:DATAout:ITEM:ALLClear**

Example **:DATAOUT:ITEM:ALLCLEAR**
Clears all set output items

Function Clears all items set by default for output to the floppy disk drive or printer.

Note If the :DATAout:FD and :DATAout:PRINter commands is executed, an execution error occurs.

:DATAout:ITEM:EFFiciency

■ Sets the output item of the efficiency measurement.

Syntax **:DATAout:ITEM:EFFiciency**
<NR1>
<NR1> = 0 - 7

Example **:DATAOUT:ITEM:EFFICIENCY 1**
As the default output items to the floppy disk drive or printer for load factor measurement, specify EFF1.

Function Sets the output item for the efficiency measurement to FDD or printer.
The item is set as shown below by setting bits to 1 or 0, to specify a single numerical value.

bit 7	bit 6	bit 5	bit 4	bit 3	bit 2	bit 1	bit 0
–	–	–	–	–	EFF3	EFF2	EFF1

Error Execution error / If the setting data is out of the range.

:DATAout:ITEM:EFFiciency?

■ Queries the output item of the efficiency measurement.

Syntax **:DATAout:ITEM:EFFiciency?**

Response syntax **:DATAOUT:ITEM:EFFICIENCY** <0-7>

Example
Transmission **:DATAOUT:ITEM:EFFICIENCY?**
Response **:DATAOUT:ITEM:EFFICIENCY 1**

Function Queries the output item of the efficiency measurement to FDD or printer

:DATAout:ITEM:EXTernalin

■ Sets the output item for the measurement value by using the 9603 External signal input unit.

Syntax **:DATAout:ITEM:EXTernalin** <NR1>
<NR1> = 0 - 7

Example **:DATAOUT:ITEM:EXTERNALIN 7**
As the default output items to the floppy disk drive or printer for external signal input unit measurement, specify EXTA, EXTB, PM.

Function Sets the output item for the measurement value with the 9603 to FDD or printer.
The item is set as shown below by setting bits, to specify a single numerical value.

bit 7	bit 6	bit 5	bit 4	bit 3	bit 2	bit 1	bit 0
–	–	–	–	–	PM	EXTB	EXTA

Error Execution error / If the setting data is out of the range.

:DATAout:ITEM:EXTernalin?

■ Queries the output item for the measurement value by using the 9603 External signal input unit.

Syntax **:DATAout:ITEM:EXTernalin?**

Response syntax **:DATAOUT:ITEM:EXTERNALIN** <0-7>

Example
Transmission **:DATAOUT:ITEM:EXTERNALIN?**
Response **:DATAOUT:ITEM:EXTERNALIN 7**

Function Queries the output item for the measurement value with the 9603 to FDD or printer.

:DATAout:ITEM:FREQuency

■ Sets the output item for the frequency measurement to FDD or printer.

Syntax **:DATAout:ITEM:FREQuency** <NR1>
<NR1> = 0 - 7

Example **:DATAOUT:ITEM:FREQuency 1**
As the default output items to the floppy disk drive or printer for frequency measurement, specify FA.

Function Sets the output item for the frequency measurement to FDD or printer.
The item is set as shown below by setting bits, to specify a single numerical value.

bit 7	bit 6	bit 5	bit 4	bit 3	bit 2	bit 1	bit 0
					FC	FB	FA

Error Execution error / If the setting data is out of the range.

:DATAout:ITEM:FREQuency?

■ Queries the output item for the frequency measurement to FDD or printer.

Syntax **:DATAout:ITEM:FREQuency?**

Response syntax **:DATAOUT:ITEM:FREQUENCY** <0-7>

Example

Transmission **:DATAOUT:ITEM:FREQUENCY?**

Response **:DATAOUT:ITEM:FREQUENCY 0**

Function Queries the output item for the frequency measurement to FDD or printer.

:DATAout:ITEM:INTEGrate

■ Sets the output item for integration.

Syntax **:DATAout:ITEM:INTEGrate**
<NR1,.....(10 items)>
<NR1> = 0 - 63

Example **:DATAOUT:ITEM:INTEGRATE 0,0,7,0,0,0,0,0,0,1**
As the default output items to the floppy disk drive or printer for integration value, sets the total current integration value for channel 1 to 3 (IH1, IH2, IH3), and integration elapsed time (TIME).

Function Sets the output items (10 items) for integration (integration value, integration elapsed time) to FDD or printer.

The items are set as shown below by setting bits, to specify ten numerical values.

	bit 7	bit 6	bit 5	bit 4	bit 3	bit 2	bit 1	bit 0
1	—	—	PIH6	PIH5	PIH4	PIH3	PIH2	PIH1
2	—	—	MIH6	MIH5	MIH4	MIH3	MIH2	MIH1
3	—	—	IH6	IH5	IH4	IH3	IH2	IH1
4	—	—	PWP6	PWP5	PWP4	PWP3	PWP2	PWP1
5	—	—	MWP6	MWP5	MWP4	MWP3	MWP2	MWP1
6	—	—	WP6	WP5	WP4	WP3	WP2	WP1
7	—	—	PWP45	PWP456	PWP123	PWP56	PWP34	PWP12
8	—	—	MWP45	MWP456	MWP123	MWP56	MWP34	MWP12
9	—	—	WP45	WP456	WP123	WP56	WP34	WP12
10	—	—	—	—	—	—	—	TIME

Error Execution error / If the setting data is out of the range.

Note Depending on connection mode and optional unit, the item which is not displayed can not be selected. The set items which cannot be selected is ignored.

:DATAout:ITEM:INTEGrate?

■ Queries the output item for integration.

Syntax **:DATAout:ITEM:INTEGrate?**

Response syntax **DATAOUT:ITEM:INTEGRATE** <0-63>..

Example
Transmission **:DATAOUT:ITEM:INTEGRATE?**
Response **:DATAOUT:ITEM:INTEGRATE 0,0,7,0,0,0,0,0,0,1**

Function Queries the output item for integration value to FDD or printer.

:DATAout:ITEM:LOADfactor

■ Sets the output item for the load factor.

Syntax **:DATAout:ITEM:LOADfactor** <NR1 2 items>
<NR1> = 0 - 63

Example **:DATAOUT:ITEM:LOADFACTOR 7,0**
As the default output items to the floppy disk drive or printer for load factor measurement, specify LF1, LF2, LF3.

Function Sets the output items for load factor to FDD or printer.
The items are set as shown below by setting bits, to specify two numerical values.

	bit 7	bit 6	bit 5	bit 4	bit 3	bit 2	bit 1	bit 0
1	—	—	LF6	LF5	LF4	LF3	LF2	LF1
2	—	—	LF45	LF456	LF123	LF56	LF34	LF12

Error Execution error / If the setting data is out of the range.

Note Depending on connection mode and optional unit, the item which is not displayed can not be selected. The set items which cannot be selected is ignored.

:DATAout:ITEM:LOADfactor?

■ Queries the output item for the load factor?

Syntax **:DATAout:ITEM:LOADfactor?**

Response syntax **:DATAOUT:ITEM:LOADFACTOR** <0-64>

Example
Transmission **:DATAOUT:ITEM:LOADFACTOR?**
Response **:DATAOUT:ITEM:LOADFACTOR 7,0**

Function Queries the output items for load factor to FDD or printer.

:DATAout:ITEM:NORMal

■ Sets the output item for the normal measurement.

Syntax **:DATAout:ITEM:NORMal** <NR1,.. (8 items)>

<NR1> = 0 - 63

Example **:DATAOUT:ITEM:NORMAL 7,7,7,0,0,0,0,0**

As the default output items to the floppy disk drive or printer for normal measurement, specify U1, U2, U3, I1, I2, I3, P1, P2, P3.

Function Sets the output items (8 items) for measurement value for each channel (excluding sum value)

The items are set as shown below by setting bits, to specify eight numerical values.

	bit 7	bit 6	bit 5	bit 4	bit 3	bit 2	bit 1	bit 0
1	—	—	U6	U5	U4	U3	U2	U1
2	—	—	I6	I5	I4	I3	I2	I1
3	—	—	P6	P5	P4	P3	P2	P1
4	—	—	S6	S5	S4	S3	S2	S1
5	—	—	Q6	Q5	Q4	Q3	Q2	Q1
6	—	—	PF6	PF5	PF4	PF3	PF2	PF1
7	—	—	DEG6	DEG5	DEG4	DEG3	DEG2	DEG1
8	—	—	PK6	PK5	PK4	PK3	PK2	PK1

Error Execution error / If the setting data is out of the range.

Note The items P, S, Q, PF, DEG are invalid in connection mode 3P3W or 3V3A.

Depending on the optional unit installing, if the set items which cannot be selected is ignored.

:DATAout:ITEM:NORMal?

■ Queries the output item for the normal measurement.

Syntax **:DATAout:ITEM:NORMal?**

Response syntax **:DATAOUT:ITEM:NORMAL** <0-63>

Example

Transmission **:DATAOUT:ITEM:NORMAL?**

Response **:DATAOUT:ITEM:NORMAL 7,7,7,0,0,0,0,0**

Function Queries the output items (8 items) for measurement value for each channel (excluding sum value).

:DATAout:ITEM:SUM

■ Sets the output item for SUM value.

Syntax **:DATAout:ITEM:SUM** <NR1,.. (7 items)>
<NR1> = 0 - 63

Example **:DATAOUT:ITEM:SUM 7,7,7,0,0,0,0**
As the default output items to the floppy disk drive or printer for SUM value, specify U12, U34, U56, I12, I34, I56, P112, P34, P56.

Function Sets the output items (7 items) for SUM value.
The items are set as shown below by setting bits, to specify seven numerical values.

	bit 7	bit 6	bit 5	bit 4	bit 3	bit 2	bit 1	bit 0
1	—	—	U45	U456	U123	U56	U34	U12
2	—	—	I45	I456	I123	I56	I34	I12
3	—	—	P45	P456	P123	P56	P34	P12
4	—	—	S45	S456	S123	S56	S34	S12
5	—	—	Q45	Q456	Q123	Q56	Q34	Q12
6	—	—	PF45	PF456	PF123	PF56	PF34	PF12
7	—	—	DEG45	DEG456	DEG123	DEG56	DEG34	DEG12

Error Execution error / If the setting data is out of the range.

Note Depending on the optional unit installing, if the set items which cannot be selected is ignored.

:DATAout:ITEM:SUM?

■ Queries the output item for the SUM value.

Syntax **:DATAout:ITEM:SUM?**

Response syntax **:DATAOUT:ITEM:SUM** <0-63>

Example
Transmission **:DATAOUT:ITEM:SUM?**
Response **:DATAOUT:ITEM:SUM 7,7,7,0,0,0,0**

Function Queries the output items (7 items) for SUM value.

:DATAout:FD

■ Sets the output operation on a FDD.

Syntax **:DATAout:FD** <ON/OFF>

Example **:DATAOUT:FD ON**
Set the data output on a floppy disk to on.

Function Enables or disables outputting on a floppy disk.
Not set to " ON "even when sending the [ON] command with the HIOKI 3193-10.

:DATAout:FD?

■ Queries the setting of the output on a FDD.

Syntax **:DATAout:FD?**

Response syntax **:DATAOUT:FD** <ON/OFF>

Example
Transmission **:DATAOUT:FD?**
Response **:DATAOUT:FD ON**

Function Queries the current setting of the output on a FDD.

:DATAout:PRINter

■ Sets the output on a printer.

Syntax **:DATAout:PRINter** <ON/OFF>

Example **:DATAOUT:PRINTER ON**
Sets the printer to on.

Function Enables or disables outputting on a printer.

Errors Execution error / When the printer is not installed in the HIOKI 3193

:DATAout:PRINter?

■ Queries the setting of the output on a printer.

Syntax **:DATAout:PRINter?**

Response syntax **:DATAOUT:PRINTER** <ON/OFF>

Example
Transmission **:DATAOUT:PRINTER?**
Response **:DATAOUT:PRINTER ON**

Function Queries the current setting for the printing output.

:DEMAg

■ Degauss current

Syntax **:DEMAg** <A>,,,
<A> = I1, I2, I3, I4, I5, I6

Example **:DEMAG I1,I2,I3**
Degauss current I1 on channel 1, current I2 on channel 2, current I3 on channel 3.

Function Degauss and zero-adjust current of each input units.

Note
- This command executes when the AC/DC direct input unit or 9602 AC/DC clamp unit is used with the AC/DC current sensor.
- This setting is only for current.

:DISPlay:DETail [*channel no.*]

■ Set items to be displayed on the "Detail display" screen of the channel screen.

Syntax **:DISPlay:DETail**[1 - 6] <A>, ..

Example When measuring in 3V3A mode with using the channels 1 to 3 of the input unit.

:DISPLAY:DETail1 U1,U2,U3,U123, I1,I2,I3,I123,P123,PF123,FA

Sets the display item to U1, U2, U3, U123, I1, I2, I3, I123, P123, PF123 (power factor λ 123),FA (frequency measurement) on the detail display for channels 1 to 3.

Connection mode	Display items on details screen
1P2W [10]	U*n*, I*n*, P*n*, PK*n*, S*n*, Q*n*, PF*n*, DEG*n*, FA, FB, FC
1P3W 3P3W [23]	Un_1, Un_2, Un_1n_2, In_1, In_2, In_1n_2, Pn_1, Pn_2, Pn_1n_2, PKn_1, PKn_2, Sn_1, Sn_2, Sn_1n_2, Qn_1, Qn_2, Qn_1n_2, PFn_1, PFn_2, PFn_1n_2 /DEGn_1, DEGn_2, DEGn_1n_2, FA, FB, FC
3V3A 3P4W [30]	Un_1, Un_2, Un_3, U$n_1n_2n_3$, In_1, In_2, In_3, I$n_1n_2n_3$, Pn_1, Pn_2, Pn_3, P$n_1n_2n_3$, PKn_1, PKn_2, PKn_3, Sn_1, Sn_2, Sn_3, S$n_1n_2n_3$, Qn_1, Qn_2, Q$n_1n_2n_3$, PFn_1, PFn_2, PFn_3, PF$n_1n_2n_3$ /DEGn_1, DEGn_2, DEGn_3, DEG$n_1n_2n_3$, FA, FB, FC

[ ]: maximum number of items
n: channel 1 to 6
n_1n_2: channels 1 and 2, 3 and 4, 4 and 5, or 5 and 6
$n_1n_2n_3$: channels 1, 2, and 3, or 4, 5 and 6

Function Set items to be displayed on the "Detail display" screen of the specified channel screen, and select screen display.

Errors Execution error / If the setting data is other than character data.

Note
- For the detail screen for is 1P3W or above, for the channel specification enter the number of the lowest-numbered channel in the combination. For example, when using input unit channels 1 to 3 in 3P3W mode, specify "1".
- The number of character data <A> which can be specified varies depending on the connection mode. The position for display cannot be specified since the position has been fixed.
- If the setting exceeds maximum number of set item, the data exceeded is ignored.
- When "Pk" (waveform peak value) is specified, the peak value which is set by the :WAVEPeak[ch] command (switching voltage/current) is displayed.
- "PF" (power factor λ) and "DEG" (phase angle φ) cannot be displayed simultaneously. If set both, the latter is displayed.

:DISPlay:DETail [*channel no.*]?

■ Queries items to be displayed on the "Detail display" screen for the specified channel.

Syntax **:DISPlay:DETail** [1 - 6]**?**

Response syntax **:DISPLAY:DETAIL** [1 - 6] <A>

Example
Transmission **:DISPLAY:DETAIL1?**
Response **:DISPLAY:DETAIL1 U1,U2,U3,U123, I1,I2,I3,I123,P123,PF123,FA**

Function Queries items to be displayed on the "Detail display" screen of the channel screen.

Note For the detail screen for is 1P3W or above, for the channel specification enter the number of the lowest-numbered channel in the combination. For example, when using input unit channels 1 to 3 in 3P4W mode, specify "1".

:DISPlay:EFFiciency

■ Makes a setting of the efficiency display.

Syntax **:DISPlay:Efficiency**

Example **:DISPLAY:EFFICIENCY**
Makes a setting of the efficiency display.

Function Makes a setting of the efficiency display.

:DISPlay:EXTernalin

■ Makes a setting of the external input display.

Syntax **:DISPlay:EXTernalin**

Example **DISPLAY:EXTERNALIN**
Makes a setting of the external input display.

Function Makes a setting of the external input display.

:DISPlay:INTEGrate [*channel no.*]

■ Makes a setting of the Integration screen for the specified channel.

Syntax **:DISPlay:INTEGrate** [1 - 6]

Example **:DISPLAY:INTEGRATE1**
Changes the screen display to detailed screen of 1ch/2ch/3ch.

Function Makes a setting of the Integration screen for the specified channel.

:DISPlay:MAGnify [*channel no.*]

■ Sets items to be displayed on the enlarged screen for the specified channel

Syntax **:DISPlay:MAGnify**[1 - 6] <A,..>

Example When measuring in 3V3A mode with using the channels 1 to 3 of the input unit.

:DISPLAY:MAGNIFY1 U123, I123,P123,PF123

Sets the display item to U123, I123, P123, PF123 (power factor λ 123) on the enlarged display for channels 1 to 3.

Function Sets items to be displayed on the enlarged screen for the specified channel

If the data is not specified, the enlarged screen for the specified channel is displayed.

Errors Execution error / If the current integration value or power integration value is specified, or if the setting data is other than character data.

Note

- For the detail screen for is 1P3W or above, for the channel specification enter the number of the lowest-numbered channel in the combination. For example, when using input unit channels 1 to 3 in 3P4W mode, specify "1".
- The number of character data <A> which can be specified is up to 4 items and the items are displayed in specified order. The items varies depending on the connection mode. See :DISPlay:DETail
- If the setting exceeds maximum number of set item, the data exceeded is ignored.
- When "Pk" (waveform peak value) is specified, the peak value which is set by the :WAVEPeak[ch] command (switching voltage/current) is displayed.
- "PF" (power factor λ) and "DEG" (phase angle φ) cannot be displayed simultaneously. If set both, the latter is displayed.
- For the frequency measurement values (FA, FB, FC), if a channel is specified which is not related to the specified screen display channel, the specification cannot be made.

:DISPlay:MAGnify [*channel no.*]?

■ Queries items to be displayed on the enlarged screen for the specified channel.

Syntax **:DISPlay:MAGnify**[1 - 6]**?**

Response syntax **:DISPLAY:MAGNIFY**[1 - 6] <A>

Example

Transmission **:DISPLAY:MAGNIFY1?**

Response **:DISPLAY:MAGNIFY1 U123,I123,P123,PF123**

Function Queries items to be displayed on the enlarged screen for the specified channel.

Note For the detail screen for is 1P3W or above, for the channel specification enter the number of the lowest-numbered channel in the combination. For example, when using input unit channels 1 to 3 in 3P4W mode, specify "1".

:DISPlay:SELect [*number of items*]

■ Sets items to be displayed on the Selection screen.

Syntax **:DISPlay:SELect**[4/8/16] <A,.(4, 8, or 16 items)>

<A>: 4 items (when 4 item display)
8 items (when 8 item display)
16 items (when 16 item display)

Example When using input unit channels 1 to 3 and 4 to 6 each for 3V3A measurement, and measuring the power factor (η1):

```
:DISPLAY:SELECT16
 U1,U2,U3,I1,I2,I3,P123,PF123,U4,
 U5,U6,I4,I5,I6,P456,OFF
```

Sets to the 16 items display on the Selection screen.

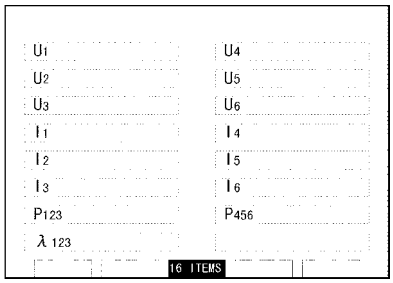

Display configuration

Function Sets items to be displayed on the Selection screen. If the data is not specified, the specified selection screen is displayed.

Errors Execution error / If the current integration value, power integration value, integration elapsed time, or measurement items using the 9605 is specified

Note
- Separate settings can be made for four item display, eight item display, or sixteen item display.
- When making the specification, the display sequence is closed up, and therefore it is not possible to leave some entries blank.
- If the setting exceeds maximum number of set item, the data exceeded is ignored.
- When "Pk" (waveform peak value) is specified, the peak value which is set by the :WAVEPeak[ch] command (switching voltage/current) is displayed.
- "PF" (power factor λ) and "DEG" (phase angle φ) cannot be displayed simultaneously. If set both, the latter is displayed.

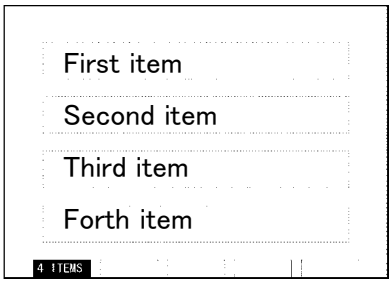

4 items display

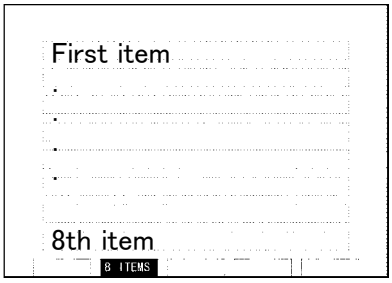

8 items display

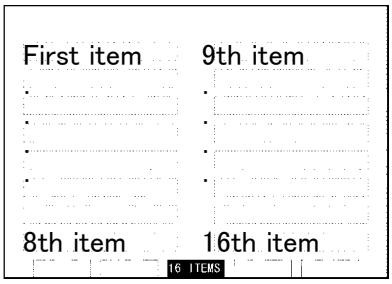

16 items display

:DISPlay:SELect [*number of items*]?

■ Queries items to be displayed on the Selection screen.

Syntax **:DISPlay:SELect**[4/ 8/ 16]**?**

Response syntax **:DISPLAY:SELECT**[4/ 8/ 16] <A>

Example
Transmission **:DISPLAY:SELECT16?**
Response **:DISPLAY:SELECT16 U1,U2,U3, I1,I2,I3,P123,PF123,U4,U5,U6, I4,I5,I6,P456,EFF1**

Function Queries the current settings of the display item.

:DISPlay?

■ Queries the screen displays.

Syntax **:DISPlay?**

Response syntax **:DISPLAY** <DETAIL [1-6]/ INTEGRATE [1-6]/ MAGNIFY [1-6]/ SELECT [4/8/16] /EXTERNALIN/ EFFICIENCY>

Example
Transmission **:DISPLAY?**
Response **:DISPLAY INTEGRATE1**

Function Queries the current screen displayed.

:EXTernalin [*channel no.*] :RANGe

■ Sets the voltage range of the 9603.

Syntax **:EXTernalin** [A/B]**:RANGe** <NR1>
<NR1> = 1, 5, 10 (V)

Example **:EXTERNALINA:RANGE 10**
Sets the range for channel A to 10 V.

Function Sets the voltage range for the specified channel of the 9603.

:EXTernalin [*channel no.*] :RANGe?

■ Queries the voltage range of the 9603.

Syntax **:EXTernalin** [A/B]**:RANGe?**

Response syntax **:EXTERNALIN**[A/B]**:RANGE** <1/5/10>

Example
Transmission **:EXTERNALINA:RANGE?**
Response **:EXTERNALINA:RANGE 5**

Function Queries the voltage range for the specified channel of the 9603.
The range value for channel B in pulse measurement is 0.

:EXTernalin [*channel no.*] :SCALe

■ Sets the scaling value of the 9603.

Syntax **:EXTernalin** [A/B]**:SCALe** <NR1>
<NR1> = 0.0001 - 99999

Example **:EXTERNALINA:SCALE 10**
Sets the scaling value for channel A of the 9603 to 10.

Function Sets the scaling value for the specified channel of the 9603.
The range value for channel B in pulse measurement is 0.

:EXTernalin [*channel no.*] :SCALe?

■ Queries the scaling value of the 9603.

Syntax **:EXTernalin** [A/B]**:SCALe?**

Response syntax **:EXTERNALIN**[A/B]**:SCALE** <NR1>

Example
Transmission **:EXTERNALINA:SCALE?**
Response **:EXTERNALINA:SCALE 10**

Function Queries the scaling value for the specified channel of the 9603.

:EXTernalin [*channel no.*] :UNIT

■ Sets the units for channel of the 9603

Syntax **:EXTernalin**[A/B]**:UNIT** <units>
units = V, Nm, mNm, kNm, kgfm, kgfcm, rpm

Example **:EXTERNALINA:UNIT Nm**
Sets the units for channel A of the 9603 to Nm.

Function Sets the units for the specified channel of the 9603.
The units are accepted in capital and small letters.

:EXTernalin [*channel no.*] :UNIT?

■ Queries the units for channel of the 9603

Syntax **:EXTernalin**[A/B]**:UNIT?**

Response syntax **:EXTERNALIN**[A/B]**:UNIT** <units>

Example
Transmission **:EXTERNALINA:UNIT?**
Response **:EXTERNALINA:UNIT NM**

Function Queries the units for the specified channel of the 9603.
The unit is output in capital letter.

:EXTernalinB:PULSe

■ Sets the input type for channel B of the 9603.

Syntax **:EXTernalinB:PULSe** <ON/OFF>

Example **:EXTERNALINB:PULSE ON**
Sets the input type for channel B to pulse input.

Function Sets the input type for the channel B of the 9603 to analog input or pulse input.

Note When the input type is set to pulse input, the source for frequency measurement channel fc is automatically set to channel B of the 9603.
When it is set to OFF, the voltage range for channel B is 10 V.

:EXTernalinB:PULSe?

■ Queries the input type for channel B of the 9603.

Syntax **:EXTernalinB:PULSe?**

Response syntax **:EXTERNALIN:PULSE** <ON/OFF>

Example
Transmission **:EXTERNALINB:PULSE?**
Response **:EXTERNALINB:PULSE ON**

Function Queries the input type for channel B of the 9603.

:EXTernalin [*channel no.*] ?

■ Queries the settings of the 9603.

Syntax **:EXTernalin**[A/B]**?**

Response syntax **:EXTERNALIN**[A/B]**:RANGE** <1/5/10>**;SCALE** <0.0001-10000>**;UNIT** <units>**;PULSE** <ON/OFF>

Example
Transmission **:EXTERNALINA?**
Response **:EXTERNALINA:RANGE 5;SCALE 10;UNIT NM;PULSE OFF**

Function Queries the current settings of the 9603.

:FD:MANual

■ Saves data on a floppy disk.

Syntax **:FD:MANual**

Example **:FD:MANUAL**

Function Saves data on a floppy disk.

Error Execution error/ If the :DATAout:FD command is not set to on.

Note Sets the item to be saved with the :DATAout:ITEM command.

:FREQuency [*channel no.*] :AUTO

■ Sets the auto ranging of the frequency measurement.

Syntax **:FREQuency**[A/B/C]**:AUTO** <ON/OFF>

Example **:FREQUENCYA:AUTO ON**
Enables the auto ranging for channel 1 of the frequency measurement.

Function Sets the auto ranging for the specified channel of the frequency measurement.

:FREQuency [*channel no.*] :AUTO?

■ Queries the auto ranging of the frequency measurement.

Syntax **:FREQuency**[A/B/C]**:AUTO?**

Response syntax **:FREQUENCY**[A/B/C]**:AUTO** <ON/OFF>

Example
Transmission **:FREQUENCYFA:AUTO?**
Response **:FREQUENCYFA:AUTO ON**

Function Queries the auto ranging for the specified channel of the frequency measurement.

:FREQuency [*channel no.*] :RANGe

■ Sets the frequency range.

Syntax **:FREQuency**[A/B/C]**:RANGe** <NR1>

<NR1> = 50, 500, 5E+3, 5E+4, 2E+6

Example **:FREQUENCYA:RANGE 500**

Sets the frequency range for channel A to 500 Hz

Function Sets the frequency range for the specified channel of the frequency measurement.

:FREQuency [*channel no.*] :RANGe?

■ Queries the frequency range.

Syntax **:FREQuency**[A/B/C]**:RANGe?**

Example
Transmission **:FREQUENCYA:RANGE?**
Response **:FREQUENCYA:RANGE 500**

Function Sets the frequency range for the specified channel of the frequency measurement.

:FREQuency [*channel no.*] :SOURce

■ Sets the channel source of the frequency measurement.

Syntax **:FREQuency**[A/B/C]**:SOURce** <A>

<A> = U1, U2, U3, U4, U5, U6, I1, I2, I3, I4 ,I5, I6
If the setting of external input for channel B is pulse measurement, the frequency measurement source for channel C is forcibly set to "EXTB" and changing is not possible.

Example **:FREQUENCYA:SOURCE U1**

Sets the frequency measurement source for channel A to U1.

Function Sets the source of the frequency measurement for specified channel.

:FREQuency [*channel no.*] :SOURce?

■ Queries the channel source of the frequency measurement.

Syntax **:FREQuency**[A/B/C]**:SOURce?**

Example
Transmission **:FREQUENCYA:SOURCE?**
Response **:FREQUENCYA:SOURCE U1**

Function Queries the current setting of the frequency source for the specified channel.

:FREQuency [*channel no.*] ?

■ Queries the settings for frequency measurement channel.

Syntax **:FREQuency**[A/B/C]**?**

Response syntax **:FREQUENCY**[A/ B/ C]**:AUTO** <ON/OFF>**;RANGE** <1/5/10>**;SOURCE** <A>

Example
Transmission **:FREQUENCYA?**
Response **:FREQUENCYA:AUTO ON;RANGE 50; SOURCE U1**

Function Queries the settings for the specified channel of the frequency measurement.

:HEADer

■ Enables and disables headers.

Syntax **:HEADer** <ON/OFF>

Example **:HEADer ON**
Sets the header for response to on. Depending on the enablement of header for :MEASure?, response format varies.

Transmission **:MEASURE? U1,A1,P1**
Response **U1 +10.230E+0;I1 +01.000E+0;P1 01.340E+3** (When headers on)
+10.230E+0,+01.000E+0,01.340E+3 (When headers off)

Function Enables or disables headers of the response message from this unit. However, this excludes the reply messages to some common commands. The reply format to the MEASure? query also depends on whether headers are enabled or not.

Notes In the following case, the headers are disabled (set to OFF)
When the power key is pressed.
When reset by input
When *RST is executed

:HEADer?

■ Queries the headers enablement.

Syntax **:HEADer?**

Response syntax **:HEADER** <ON/OFF>

Example
Transmission **:HEADER?**
Response **:HEADER ON?**

Function Queries the current setting of header.

:HOLD

■ Enables or disables holding the screen displays.

Syntax **:HOLD** <ON/OFF>

Example **:HOLD ON**
:HOLD
:HOLD OFF
Holds the screen displays to update once and returns to normal display.

Function Enables or disables holding the screen displays.
During holding displays, if this command is executed without data portion, the displays are updated once. (same as GET,*TRG).

:HOLD?

■ Queries the holding screen displays enablement.

Syntax **:HOLD?**

Example
Transmission **:HOLD?**
Response **:HOLD ON**

Function Queries the current setting of the holding display.

:INTEGrate:RESEt

■ Resets the integration value.

Syntax **:INTEGrate:RESEt**

Example **:INTEGRATE:RESET**
Resets integration value for all channels.

Function Resets the integration value.

Note The integration values for all channels are simultaneously reset. In this case, for the channel during integration, an execution error occurs.

:INTEGrate:STARt

■ Starts the integration.

Syntax **:INTEGrate:STARt** <channel no.>
<channel no.> = 1 to 6

Example **:INTEGRATE:START**
Starts simultaneously integration for all channels.
:INTEGRATE:START 1
:INTEGRATE:START 2
:INTEGRATE:START 3
The integration start timing is offset, and the start is for channels 1, 2, and 3 in that order.

Function Starts integration for the specified channel or all channels.
When the channels are specified, the integration for the specified channel starts.
When the channel is not specified, the integration for all channels starts.

Notes
- The items to be integrated are the specified items by the :DISPlay: INTEGrate [channel no.] <A> command.
- For the detail screen for is 1P3W or above, for the channel specification enter the number of the lowest-numbered channel in the combination. For example, when using input unit channels 1 to 3 in 3P4W mode, specify "1".
- When the interval time, timer time, or real time control time is set and if the integration starts with all channels, the operation is controlled by the specified time, however, if the channels are specified, time controls are invalid to operate manually.

:INTEGrate:STOP

■ Stops integration.

Syntax **:INTEGrate:STOP** <channel no.>
<channel no.> = 1 to 6

Example **:INTEGRATE:STOP**
Stops simultaneously integration for all channels.
:INTEGRATE:STOP 1
:INTEGRATE:STOP 2
:INTEGRATE:STOP 3
The integration stop timing is offset, and the start is for channels 1, 2, and 3 in that order.

Function Stops integration for the specified channel or all channels.
When the channels are specified, the integration for the specified channel stops.
When the channel is not specified, the integration for all channels stops.

Note If the channel is not specified to stop, the integrations for all channels are simultaneously stopped even when the integration started with specified channel,

:INTEGrate?

■ Queries the channels currently operating integration.

Syntax **:INTEGrate?**

Example
Transmission **:INTEGRATE?**
Response **:INTEGRATE** 1,2,3

Function Queries the channels currently operating integration. When all channels controlled by the integration function are stopped, the 3193 sends a "0" reply to the PC.

:INTERval:CONTrol

■ Enables and disables the interval time control.

Syntax **:INTERval:CONTrol** <ON/OFF>

Example **:INTERVAL:CONTROL ON**
Enables the interval time control.

Function Enables and disables the interval time control.

:INTERval:CONTrol?

■ Queries the interval time control.

Syntax **:INTERval:CONTrol?**

Response syntax **:INTERVAL:CONTROL ON**

Example
Transmission **:INTERVAL:CONTROL?**
Response **:INTERVAL:CONTROL ON**

Function Queries the current setting of the interval time control.

:INTERval:TIME

■ Sets the interval time.

Syntax **:INTERval:TIME** <hour,min,sec>
hour = 00 to 99
min = 00 to 59
sec = 00 to 50 (10-second step)

Example **:INTERVAL:TIME 000,10,00**
Sets the interval time to 10 minutes.

Function Sets the interval time.

:INTERval:TIME?

■ Queries the interval time.

Syntax **:INTERval:TIME?**

Example
Transmission **:INTERVAL:TIME?**
Response **:INTERVAL:TIME 000,10,00**

Function Queries the current setting of interval time.

:INTERval?

■ Queries the interval time control.

Syntax **:INTERval?**

Response syntax **:INTERVAL:CONTROL** <ON/OFF>**;** **TIME** <hour,min,sec>

Example
Transmission **:INTERVAL?**
Response **:INTERVAL:CONTROL ON;TIME 000,10,00**

Function Queries the current settings for interval time control.

:KEYLock

■ Enables and disables key lock.

Syntax **:KEYLock** <ON/OFF>

Example **:KEYLOCK ON**
Enables the key lock.

Function ・Enables and disables key lock.
The key lock is released by switching from local to remote mode.

Note All key are locked by the :KEYLock ON command.

:KEYLock?

■ Queries the current setting of key lock.

Syntax **:KEYLock?**

Example
Transmission **:KEYLOCK?**
Response **:KEYLOCK ON**

Function Queries the current setting of key lock.

Note Powering off releases key lock state set by the KEYLock ON command, however, the key lock operation by panel key is not released. Note that the two operations are different.

:LANGuage

■ Sets the language to be displayed.

Syntax **:LANGuage** <ENGlish/JAPanese>

Example **:LANGUAGE ENGLISH**
Sets the display language to English.

Function Sets the language to be displayed.

:LANGuage?

■ Queries the language to be displayed.

Syntax **:LANGuase?**

Response syntax **:LANGUAGE** <ENGlish/JAPanese>

Example
Transmission **:LANGUAGE?**
Response **:LANGUAGE ENGLISH**

Function Queries the current setting of display language.

:LPF[*channel no.*]

■ Sets the low-pass filter (LPF).

Syntax **:LPF**[1 - 6] <NR1>
<NR1> = 0, 500, 5E+3, 3E+5 (0:off)

Example **:LPF1 500**
Sets the cut-off frequency (*fc*) of the low-pass filter for channel 1 to 500 Hz.

Function Sets the cut-off frequency (*f*c) of the low-pass filter (LPF) for the specified input unit.

Notes Depending on the input unit to be used, the cut-off frequency cannot be specified.
If the specified channel is in DC mode, it is ignored.

:LPF[*channel no.*]?

■ Queries the low-pass filter

Syntax **:LPF**[1 - 6]**?**

Response syntax **:LPF**[1 - 6] <NR1>

Example
Transmission **:LPF1?**
Response **:LPF1 500**

Function Queries the current setting of the low-pass filter for the specified input unit.

:MATH

■ Sets the calculation.

Syntax **:MATH** <NR1>
<NR1> = 1, 2, 3

Example **:MATH 1**
Sets the calculation to type 1.

Function Sets the calculation for apparent power and reactive power.

Note The calculations for all channel are simultaneously specified.

:MATH?

■ Queries the calculation.

Syntax **:MATH?**

Response syntax **:MATH** <1/2/3>

Example
Transmission **:MATH?**
Response **:MATH 1**

Function Queries the current setting of the calculation method for apparent power and reactive power.

:MEASure:ITEM

■ Specify the default items to be transferred.

Syntax **:MEASure:ITEM** <A>

Example **:MEASURE:ITEM U1,U2,U3,I1,I2, I3,P123,DEG123,WP123**
When the :MEASure? query is received, returns the measurement data for U1, U2, U3, I1, I2, I3, P123, DEG123, WP123.

Function Specify the default items to be transferred in the response message to the :MEASure? query in the default mode.

Note Depending on the optional unit combination or settings, the item which is not measured is selected, it is ignored.

:MEASure:ITEM?

■ Queries the default items.

Syntax **:MEASure:ITEM?**

Response syntax **:MEASURE:ITEM:NORMAL** <0-63 (8 items)>**;SUM** <0-63 (7 items)>**; INTEGRATE** <0-63 (10 items)>**; FREQUENCY** <0-7>**;LOADFACTOR** <0-64 (2 items)>**;EFFICIENCY** <0-7>**; EXTERNALIN** <0-7>

Example
Transmission **:MEASURE:ITEM?**
Response **:MEASURE:ITEM: NORMAL 7,7,0,0,0,0,0,0; SUM 8,8,8,8,8,8,8,0; INTEGRATE 0,0,7,0,0,0,8,8,8; FREQUENCY 1;LOADFACTOR 0,8; EFFICIENCY 1;EXTERNALIN 7**

Function Queries the all default items specified by the :MEASure:ITEM <NR1>

:MEASure:ITEM:ALLClear

■ Clears all default items to be transferred.

Syntax **:MEASure:ITEM:ALLClear**

Example **:MEASURE:ITEM:ALLCLEAR**

Function Clears all default items to be set by the :MEASure:ITEM command in the default mode.

:MEASure:ITEM:EFFiciency

■ Sets the output item of the efficiency measurement.

Syntax **:MEASure:ITEM:EFFiciency** <NR1>

<NR1> = 0 - 7

Example **:MEASURE:ITEM:EFFICIENCY 1**

Sets the default items of the efficiency measurement to EFF1.

Function Sets the default items (only efficiency data) to be transferred in the response message to the :MEASure? query in the default mode.

The item is set as shown below by setting bits, to specify a single numerical value.

bit 7	bit 6	bit 5	bit 4	bit 3	bit 2	bit 1	bit 0
					EFF3	EFF2	EFF1

Error Execution error / If the setting data is out of the range.

:MEASure:ITEM:EFFiciency?

■ Queries the output item of the efficiency measurement.

Syntax **:MEASure:ITEM:EFFiciency?**

Response syntax **:MEASURE:ITEM:EFFICIENCY** <NR1>

Example

Transmission **:MEASURE:ITEM:EFFICIENCY?**

Response **:MEASURE:ITEM:EFFICIENCY 1**

Function Queries the output item of the efficiency measurement specified by the :MEASure:ITEM:EFFiciency <NR1>

:MEASure:ITEM:EXTernalin

■ Sets the output item for the measurement value by using the 9603 External signal input unit.

Syntax **:MEASure:ITEM:EXTernalin** <NR1>

<NR1> = 0 - 7

Example **:MEASURE:ITEM:EXTERNALIN 7**

As the default output items for measurement by external signal input unit, specify EXTA, EXTB, PM.

Function Sets the default items (only data for the external signal input unit) to be transferred in the response message to the :MEASure? query in the default mode.

The item is set as shown below by setting bits, to specify a single numerical value.

bit 7	bit 6	bit 5	bit 4	bit 3	bit 2	bit 1	bit 0
					PM	EXTB	EXTA

Error Execution error / If the setting data is out of the range.

:MEASure:ITEM:EXTernalin?

■ Queries the output item for the measurement value by using the 9603 External signal input unit.

Syntax **:MEASure:ITEM:EXTernalin?**

Response syntax **:MEASURE:ITEM:EXTERNALIN** <NR1>

Example
Transmission **:MEASURE:ITEM:EXTERNALIN?**
Response **:MEASURE:ITEM:EXTERNALIN 7**

Function Queries the output item of the external input measurement specified by the :MEASure:ITEM:EXTernalin <NR1>

:MEASure:ITEM:FREQuency

■ Sets the output item for the frequency measurement.

Syntax **:MEASure:ITEM:FREQuency** <NR1>
<NR1> = 0 - 7

Example **:MEASURE:ITEM:FREQUENCY 1**
As the default output items for frequency measurement, specify F1.

Function Specify the default items to be transferred in the response message to the :MEASure? query in the default mode.
The item is set as shown below by setting bits, to specify a single numerical value.

bit 7	bit 6	bit 5	bit 4	bit 3	bit 2	bit 1	bit 0
					F3	F2	F1

:MEASure:ITEM:FREQuency?

■ Queries the output item for the frequency measurement.

Syntax **:MEASure:ITEM:FREQuency?**

Response syntax **:MEASURE:ITEM:FREQUENCY** <NR1>

Example
Transmission **:MEASURE:ITEM:FREQUENCY?**
Response **:MEASURE:ITEM:FREQUENCY 0**

Function Queries the output item of the efficiency measurement specified by the :MEASure:ITEM:FREQuency<NR1>

:MEASure:ITEM:INTEGrate

■ Sets the output item for integration.

Syntax **:MEASure:ITEM:INTEGrate**
<NR1,...(10 items)>
<NR1> = 0 - 63

Example **:MEASURE:ITEM:INTEGRATE 0,0,7,0,0,0,0,0,0,1**
Sets the total current integration value for channel 1 to 3 (IH1, IH2, IH3), positive integration power (PWP1, PWP2, PWP3), negative integration power (MWP1,MWP2,MWP3), total integration power (WP1,WP2,WP3), and integration elapsed time (TIME), as default items to response to the :MEASure? query.

Function Sets the default items (only integration value and integration elapsed time) to be transferred in the response message to the :MEASure? query in the default mode.
The items are set as shown below by setting bits, to specify ten numerical values.

	bit 7	bit 6	bit 5	bit 4	bit 3	bit 2	bit 1	bit 0
1	—	—	PIH6	PIH5	PIH4	PIH3	PIH2	PIH1
2	—	—	MIH6	MIH5	MIH4	MIH3	MIH2	MIH1
3	—	—	IH6	IH5	IH4	IH3	IH2	IH1
4	—	—	PWP6	PWP5	PWP4	PWP3	PWP2	PWP1
5	—	—	MWP6	MWP5	MWP4	MWP3	MWP2	MWP1
6	—	—	WP6	WP5	WP4	WP3	WP2	WP1
7	—	—	PWP45	PWP456	PWP123	PWP56	PWP34	PWP12
8	—	—	MWP45	MWP456	MWP123	MWP56	MWP34	MWP12
9	—	—	WP45	WP456	WP123	WP56	WP34	WP12
10	—	—	—	—	—	—	—	TIME

Error Execution error / If the setting data is out of the range.

Note Depending on connection mode and optional unit, the item which is not displayed can not be selected. The set items which cannot be selected is ignored.

:MEASure:ITEM:INTEGrate?

■ Queries the output item for integration.

Syntax **:MEASure:ITEM:INTEGrate?**

Response syntax **:MEASURE:ITEM:INTEGRATE** <0-63 (10 items)>

Example
Transmission **:MEASURE:ITEM:INTEGRATE?**
Response **:MEASURE:ITEM:INTEGRATE 0,0,7,0,0,0,0,0,0,1**

Function Queries the output item of the efficiency measurement specified by the :MEASure:ITEM:INTEGrate

:MEASure:ITEM:LOADfactor

■ Sets the output item for the load factor.

Syntax **:MEASure:ITEM:LOADfactor**
<NR1, (2 items)>
<NR1> = 0 - 63

Example **:MEASURE:ITEM:LOADFACTOR 7,0**
Sets the measurement items of the load factor to LF1, LF2, LF3.

Function Sets the default items (only load factor *LF*) to be transferred in the response message to the :MEASure? query in the default mode.

The items are set as shown below by setting bits, to specify two numerical values.

	bit 7	bit 6	bit 5	bit 4	bit 3	bit 2	bit 1	bit 0
1	—	—	LF6	LF5	LF4	LF3	LF2	LF1
2	—	—	LF45	LF456	LF123	LF56	LF34	LF12

Error Execution error / If the setting data is out of the range.

Note Depending on connection mode and optional unit, the item which is not displayed can not be selected. The set items which cannot be selected is ignored.

:MEASure:ITEM:LOADfactor?

■ Queries the output item for the load factor?

Syntax **:MEASure:ITEM:LOADfactor?**

Response syntax **:MEASURE:ITEM:LOADFACTOR**
<NR1,(2items)>
<NR1> **= 0 - 63**

Example
Transmission **:MEASURE:ITEM:LOADFACTOR?**
Response **:MEASURE:ITEM:LOADFACTOR 7,0**

Function Queries the output items specified by the :MEASure:ITEM:LOADfactor <NR1>

:MEASure:ITEM:NORMal

■ Sets the output item for the normal measurement.

Syntax **:MEASure:ITEM:NORMal** <NR1, (8 items)>

<NR1> = 0 - 63

Example **:MEASURE:ITEM:NORMAL 7,7,7,0,0, 0,0,0**

Sets the U1, U2, U3, I1, I2, I3, P1, P2, P3 as default items to response to the :MEASure? query.

Function Sets the default items (only measurement value for each channels) to be transferred in the response message to the :MEASure? query in the default mode.

The items are set as shown below by setting bits, to specify eight numerical values.

	bit 7	bit 6	bit 5	bit 4	bit 3	bit 2	bit 1	bit 0
1	—	—	U6	U5	U4	U3	U2	U1
2	—	—	I6	I5	I4	I3	I2	I1
3	—	—	P6	P5	P4	P3	P2	P1
4	—	—	S6	S5	S4	S3	S2	S1
5	—	—	Q6	Q5	Q4	Q3	Q2	Q1
6	—	—	PF6	PF5	PF4	PF3	PF2	PF1
7	—	—	DEG6	DEG5	DEG4	DEG3	DEG2	DEG1
8	—	—	PK6	PK5	PK4	PK3	PK2	PK1

Error Execution error / If the setting data is out of the range.

Note The items P, S, Q, PF, DEG cannot be selected in connection mode 3P3W or 3V3A.

Depending on the optional unit installing, if the set items which cannot be selected is ignored.

:MEASure:ITEM:NORMal?

■ Queries the output item for the normal measurement.

Syntax **:MEASure:ITEM:NORMal?**

Response syntax **:MEASURE:ITEM:NORMAL** <NR1>

Example

Transmission **:MEASURE:ITEM:NORMAL?**

Response **:MEASURE:ITEM:NORMAL 7,7,7,0,0, 0,0,0**

Function Queries the default items to be transferred, which are specified by the measurement value for each channels.

:MEASure:ITEM:SUM

■ Sets the output item for the SUM value.

Syntax **:MEASure:ITEM:SUM** <NR1, (7 items)>

<NR1> = 0 - 63.

Example **:MEASURE:ITEM:SUM 7,7,7,0,0, 0,0**

Sets the U12, U34, U56, I12, I34, I56, P112, P34, P56 as the default items.

Function Sets the default items (only SUM value) to be transferred in the response message to the :MEASure? query in the default mode.

The items are set as shown below by setting bits, to specify seven numerical values.

	bit 7	bit 6	bit 5	bit 4	bit 3	bit 2	bit 1	bit 0
1	—	—	U45	U456	U123	U56	U34	U12
2	—	—	I45	I456	I123	I56	I34	I12
3	—	—	P45	P456	P123	P56	P34	P12
4	—	—	S45	S456	S123	S56	S34	S12
5	—	—	Q45	Q456	Q123	Q56	Q34	Q12
6	—	—	PF45	PF456	PF123	PF56	PF34	PF12
7	—	—	DEG45	DEG456	DEG123	DEG56	DEG34	DEG12

Error Execution error / If the setting data is out of the range.

Note Depending on the optional unit installing, if the set items which cannot be selected is ignored.

:MEASure:ITEM:SUM?

■ Queries the output item for the SUM value.

Syntax **:MEASure:ITEM:SUM?**

Response syntax **:MEASURE:ITEM:SUM** <0-63>

Example

Transmission **:MEASURE:ITEM:SUM?**

Response **:MEASURE:ITEM:SUM 7,7,7,0,0,0,0**

Function Queries the default items specified by SUM value.

:MEASure?

■ Queries the specified data.

Syntax ① Default mode

:MEASure?

② Data specification mode

:MEASure? <A (up to 70 items)>

<A>= U1 - U6, U12, U34, U56, U45, U123, U456
I1 - I6, I12, I34, I56, I45, I123, I456
P1 - P6, P12, P34, P56, P45, P123, P456
S1 - S6, S12, S34, S56, S45, S123, S456
Q1 - Q6, Q12, Q34, Q56, Q45, Q123, Q456
PF1 - PF6, PF12, PF34, PF56, PF45, PF123, PF456
DEG1 - DEG6, DEG12, DEG34, DEG56, DEG45, DEG123, DEG456, Pk1 - Pk6, FA, FB, FC
EFF1, EFF2, EFF3, EXTA, EXTB, PM
PIH1 - PIH6, MIH1 - MIH6, IH1 - IH6
PWP1 - PWP6, PWP12, PWP34, PWP56, PWP45, PWP123, PWP456, MWP1 - MWP6, MWP12, MWP34, MWP56, MWP45, MWP123, MWP456
WP1 - WP6, WP12, WP34, WP56, WP45, WP123, WP456, TIME, LF1 - LF6, LF12, LF34, LF56, LF45, LF123, LF456

Response syntax

Headers on

(header1) <A1>;(header2) <A2>;...;(header70) <A70>?

Headers off

<A1>,<A2>,..,<A>?

Example

Transmission

:MEASURE? U1,I1,P1

Response

U1 10.230E+00;I1 1.000E+00; P1 1.340E+03 (headers on)

10.230E+00;1.000E+00;1.340E+03 (headers off)

Function ① Default mode

If no parameters are specified in the data section, then this mode is used. Default item data specified by the :MEASure:ITEM command is created. In this case the data order is fixed.

② Data (parameter) specification mode

If one or more parameters are specified in the data section, then this mode is used. Measurement item data specified by <A> is created. The order of arranging the data (parameters) is freely selectable, and data is created in the specified order.

Header	Data portion
Excluding Integration value	Numerical data in NR3 format ±□□□□□□E±□□ Mantissa : 6 digits with a decimal point Exponent : 2 digits
Integration value	Numerical data in NR3 format ±□□□□□□□E±□□ Mantissa : 6 digits with a decimal point Exponent : 2 digits
Time	Numerical data in NR1 format □□□□□,□□,□□ (hours, minutes, seconds)

Error

Display blank	+6666.6E+99
Scaling error	+7777.7E+99
Input over	+9999.9E+99

Note
- Up to 70 items can be responsed.
- To change the NR3 numerical data format, see the :TRANsmit:COLumn command.

:MODE

■ Sets the wiring mode.

Syntax **:MODE** <1P2W/1P3W/3P3W/3V3A/3P4W>

Example When the same type of input unit is installed in all six channels, then when two types measurement in 3V3A mode are desired, the combination is ⑦.
:MODE 3V3A,3V3A
Sets channels 1 to 3 to 3V3A, and channels 4 to 6 to 3V3A.

Function Sets the wiring mode.

Note The only possible wiring configuration is that shown below.
Combinations 1P3W and above require all of the input units to be the same type.
Additionally, for clamp input units, the current sensors in the combination must all be of the same type and rating.
Input units not specified are all treated as 1P2W.

<table>
<tr><th></th><th>1ch</th><th>2ch</th><th>3ch</th><th>4ch</th><th>5ch</th><th>6ch</th></tr>
<tr><td>①</td><td>1P2W</td><td>1P2W</td><td>1P2W</td><td>1P2W</td><td>1P2W</td><td>1P2W</td></tr>
<tr><td>②</td><td colspan="2">1P3W/3P3W</td><td>1P2W</td><td>1P2W</td><td>1P2W</td><td>1P2W</td></tr>
<tr><td>③</td><td colspan="2">1P3W/3P3W</td><td colspan="2">1P3W/3P3W</td><td>1P2W</td><td>1P2W</td></tr>
<tr><td>④</td><td colspan="2">1P3W/3P3W</td><td colspan="2">1P3W/3P3W</td><td colspan="2">1P3W/3P3W</td></tr>
<tr><td>⑤</td><td colspan="3">3V3A/3P4W</td><td>1P2W</td><td>1P2W</td><td>1P2W</td></tr>
<tr><td>⑥</td><td colspan="3">3V3A/3P4W</td><td colspan="2">1P3W/3P3W</td><td>1P2W</td></tr>
<tr><td>⑦</td><td colspan="3">3V3A/3P4W</td><td colspan="3">3V3A/3P4W</td></tr>
</table>

:MODE?

■ Queries the wiring mode.

Syntax **:MODE?**

Example
Transmission **:MODE?**
Response **:MODE 3P3W,1P2W**

Function Queries the current setting of wiring mode.

:PEAKhold

■ Enables or disables peak value hold function.

Syntax **:PEAKhold** <ON/OFF>

Example **:PEAKHOLD ON**
Enables the peak hold function.

Function Enables or disables peak value hold function.

Note While time averaging, it is not possible to use the peak value hold function.

:PEAKhold?

■ Queries the peak value hold function.

Syntax **:PEAKhold?**

Example
Transmission **:PEAKHOLD?**
Response **:PEAKHOLD ON**

Function Queries the current setting of peak value hold function.

:PHF [*channel no.*]

■ Switches on or off the phase polarity discrimination filter for the specified channel.

Syntax **:PHF**[1 - 6] <ON/OFF>

Example **:PHF1 ON**
Enables the polarity detection stabilization filter for channel 1.

Function Switches on or off the polarity detection stabilization filter for the specified input unit.

Note
- When the parameter of the :MATH command is set to 1, this command is executed.
- In 1P3W mode or above, switches for all specified channel of the input units. Enter the lowest-numbered input unit in the combination of input units. For example, when using input unit channels 1 to 3 in 3V3A mode, specify "1".

:PHF [*channel no.*] ?

■ Queries the phase polarity discrimination filter setting.

Syntax **:PHF**[1 - 6]**?**

Example
Transmission **:PHF1?**
Response **:PHF1 ON**

Function Queries the setting of polarity detection stabilization filter for the specified input unit.

:PRINt:FEED

■ Feeds paper.

Syntax **:PRINt:FEED**

Example **:PRINT:FEED**
Feeds paper.

Function Feeds paper.

:PRINt:HCOPy

■ Outputs the screen displays.

Syntax **:PRINt:HCOPy**

Example **:PRINT:HCOPY**

Function Outputs the screen displays on a printer.

:PRINt:HELP

■ Prints settings in HELP mode.

Syntax **:PRINt:HELP**

Example **:PRINT:HELP**
Prints the settings of the unit on a printer.

Function Outputs the settings of the unit on a printer.

:PRINt:MANual

■ Executes manual printing.

Syntax **:PRINt:MANual**

Example **:PRINT:MANUAL**
Prints out on a printer.

Function Operates same as when the PRINT key is pressed.

Note
- Set the items to be output by the :DATAout:ITEM command.
- If DATAout PRINter is set to ON, execution error occurs.

:RESPonse

■ Sets the response speed.

Syntax **:RESPonse** <FAST/MID/SLOW>

Example **:RESPONSE FAST**
Sets the response speed to FAST.

Function Sets the response speed.

Note This applies to the whole 3193 unit. Separate specifications for different input units are not possible.

:RESPonse?

■ Queries the response speed.

Syntax **:RESPonse?**

Response syntax **:RESPONSE** <FAST/MID/SLOW>

Example
Transmission **:RESPONSE?**
Response **:RESPONSE FAST**

Function Queries the current setting of the response speed.

:RTC:COUNt

■ Sets the sampling count.

Syntax **:RTC:COUNt** <NR1>
<NR1> = 0 to 10000

Example **:RTC:COUNT 8**
This is set so that an event occurs when every 8 sampling operations are completed (every 1 seconds).

Function
- When the number of sampling operations set by this command has been completed, bit 7 of event status register 0 of this unit is set to 1.
- This unit carries out eight sampling operations per second, but by using this event, it is possible to issue a service request to the controller for each time the set number of sampling operations has been completed.
- If 0 is set, this setting for bit is not made. The data portion is accepted in NRf format, but decimal fractions are rounded off.
- The initial value is 0.
- The count starts from the point at which this command is received

Errors Execution error / If the setting data is out of range.

:RTC:COUNt?

■ Queries the sampling count.

Syntax **:RTC:COUNt?**

Response syntax **:RTC:COUNT** <0-10000>

Example
Transmission **:RTC:COUNT?**
Response **:RTC:COUNT 4**

Function Queries the current setting of sampling count.

:RS232c:ANSWer (Command for the RS-232C interface)

■ Sets whether or not the execution confirmation message

Syntax **RS232c:ANSWer** <ON/OFF>

Example
Results
```
PRINT #1,:RS232:ANSW ON
INPUT #1,A$
PRINT A$ 000                (OK)
PRINT #1,V:RNG 100
INPUT #1,A$
PRINT A$ 001 V:RNG is error
PRINT #1,VOLT:RANG?
INPUT #1,A$
PRINT A$ :VOLTAGE1:RANGE 150;000
                (Query data is OK)
```

Function
- Sets the execution confirmation message either ON or OFF.
- When set to ON, outputs the execution confirmation message.

Errors
- Execution error/ If the setting data is not character data other than ON or OFF or when using the GP-IB interface
- Command error/ If the setting data is not character data.

Notes
- Even if a system error occurs, this command is executed.
- When set to ON, if this message is not accepted the operation may become unstable.

:RS232c:ANSWer? (Queries for the RS-232C interface)

■ Queries whether or not the execution confirmation message are enabled

Syntax **RS232c:ANSWer?**

Response syntax
(Headers: ON)
:RS232C:ANSWER <ON/OFF>
(Headers: OFF)
<ON/OFF>

Example
Transmission **:RS232:ANSW?**
Response **:RS232C:ANSWER OFF** (headers on)
OFF (headers off)

Function Returns the current setting for the execution confirmation messages as ON or OFF.

Errors
- Query error/ If the response message is longer than 2000 bytes.
- Execution error/ If this query is executed when using GP-IB interface

Notes
- With this query, if any error occurs, no response message is produced.
- Even if a system error occurs, this query is executed.

:RS232c:ERRor? (Queries for the RS-232C interface)

■ Queries whether or not the RS-232C communications error information are enabled.

Syntax **RS232c:ERRor?**

Response syntax
(Headers: ON)
:RS232C:ERROR <0-7>
(Headers: OFF)
<0-7>

Example
Transmission **:RS232:ERR?**
Response **:RS232C:ERROR 4**
An overrun error has occurred.

Function
- Returns the RS-232C communications error information as a numerical data value in NR1 format (0 to 7) and then clears.
- Error information until reading by this command from starting the RS232C communication. Changing the communication setting clears.

128	64	32	16	8	4	2	1
bit 7	bit 6	bit 5	bit 4	bit 3	bit 2	bit 1	bit 0
Unused	Unused	Unused	Unused	Unused	Overrun	Framing	Parity

- Overrun error
- Framing error
- Parity error

Errors
- Query error/ If the response message is longer than 2000 bytes.
- Execution error/ If this query is executed when using GP-IB interface

Notes
- With this query, if any error occurs, no response message is produced.
- Even if a system error occurs, this query is executed.
- This query clears the communications error information.

:RS232c:HANDshake (Command for the RS-232C interface)

■ Sets the RS-232C communications handshake

Syntax **RS232c:HANDshake** <X/HARD/OFF>
X: software handshake
HARD: hardware handshake
OFF: no handshake

Example **:RS232:HAND X**
Sets to software handshake (X parameter).

Function Select the type of handshake.

Errors
- Execution error/ When using the GP-IB interface
- Command error/ If the setting data is not character data other than X, OFF, HARD

Notes Even if a system error occurs, this command is executed.

:RS232c:HANDshake? (Queries for the RS-232C interface)

■ Queries the setting for the RS-232C communications handshake.

Syntax **:RS232c:HANDshake?**

Response syntax
Headers: ON
:RS232C:HANDSHAKE <X/ HARD/ OFF>
Headers: OFF
<X/ HARD/ OFF>

Example
Transmission **:RS232:HAND?**
Response **:RS232C:HANDSHAKE X** (headers on)
X (headers off)

Function The value of the communications handshake is returned as character data (X, HARD or OFF).

Errors
- Query error/ If the response message is longer than 2000 bytes.
- Execution error/ If this query is executed when using GP-IB interface

Notes
- With this query, if any error occurs, no response message is produced.
- Even if a system error occurs, this query is executed.

:RS232c? (Queries for the RS-232C interface)

■ Queries the setting for the RS-232C communications handshake.

Syntax **:RS232c?**

Response syntax
Headers: ON
:RS232C:HANDSHAKE <X/ HARD/ OFF>;**ANSWER** <ON/ OFF>
Headers: OFF
<X/ HARD/ OFF>;<ON/ OFF>

Example
Transmission **:RS232?**
Response **:RS232C:HANDSHAKE OFF;ANSWER OFF** (headers on)
OFF;OFF (headers off)

Function Returns the current setting for the RS-232C communications handshake as X, HARD or OFF, the setting for execution confirmation message as ON or OFF .

Errors
- Query error/ If the response message is longer than 2000 bytes.
- Execution error/ If this query is executed when using GP-IB interface

Notes
- With this query, if any error occurs, no response message is produced.
- By using the TRANsmit:SEParator command, the message unit separator can be changed from the semicolon ";" to the comma ",".
- Even if a system error occurs, this query is executed.

:SCALe [*channel no.*] :CONTrol

■ Enables and disables scaling function of PT, CT, SC ratios.

Syntax **:SCALe:**[1 - 6]**:CONTrol**
<ON/OFF>,<ON/OFF>,<ON/OFF>

Example **:SCALE1:CONTROL ON,ON,OFF**
Sets the PT and CT ratios to on, and set the SC ratio to off in scaling function for channel 1.

Function Enables and disables PT, CT, SC ratios scaling function for specified input unit.

Notes In 1P3W mode or above, for the channel specification, enter the number of the lowest-numbered channel in the combination of input units. For example, when using input unit channels 1 to 3 in 3V3A mode, specify "1".

:SCALe [*channel no.*] :CONTrol?

■ Queries the setting of scaling function of PT, CT, SC ratios.

Syntax **:SCALe**[1 - 6]**:CONTrol?**

Response syntax **:SCALE:[**1-6**]:CONTROL** <ON/OFF>, <ON/OFF>,<ON/OFF>

Example
Transmission **:SCALE1:CONTROL?**
Response **:SCALE1:CONTROL ON,ON,OFF**

Function Queries the current setting of scaling function for specified input unit.

:SCALe [*channel no.*] :CT

■ Sets the CT ratio.

Syntax **:SCALe**[1 - 6]**:CT** <NR2>
<NR2> = 0.0001 to 10000

Example **:SCALE1:CT 1000**
Sets the CT ratio for channel 1 to 1000.

Function Sets the CT ratio for the specified input unit.

Notes
- Specifying a value which cannot be selected because of the number of input units installed results in an execution error.
- In 1P3W mode or above, for the channel specification, enter the number of the lowest-numbered channel in the combination. For example, when using input unit channels 1 to 3 in 3V3A mode, specify "1". The channels in combination can not be set individually.
- Unless the :SCALe[channel no.] :CONTrol command is set to ON, this setting is invalid even if the CT ratio is set.
- When using the 9602 and CT6862 together, please set 2.5, the default CT ratio or the value calculated by the formula: ((the desired CT ratio) × 2.5). For example, when you want to set 40 as CT ratio, please set 100 (=40 × 2.5).

:SCALe [*channel no.*] :CT?

■ Queries the CT ratio.

Syntax **:SCALe**[1 - 6]**:CT?**

Response syntax **:SCALE**[1-6]**:CT** <0.0001-10000>

Example
Transmission **:SCALE1:CT?**
Response **:SCALE1:CT 1000**

Function Queries the current setting of CT ratio for the specified input unit.

:SCALe [*channel no.*] :PT

■ Sets the PT ratio.

Syntax **:SCALe**[1 - 6]**:PT** <NR2>
<NR2> = 0.0001 to 10000

Example **:SCALE1:PT 1000**
Sets the PT ratio for channel 1 to 1000.

Function Sets the PT ratio for the specified input unit.

Notes
- Specifying a value which cannot be selected because of the number of input units installed results in an execution error.
- In 1P3W mode or above, for the channel specification, enter the number of the lowest-numbered channel in the combination. For example, when using input unit channels 1 to 3 in 3V3A mode, specify "1". The channels in combination can not be set individually.
- Unless the :SCALe[channel no.] :CONTrol command is set to ON, this setting is invalid even if the PT ratio is set.

:SCALe [*channel no.*] :PT?

■ Queries the PT ratio.

Syntax **:SCALe**[1 - 6]**:PT?**

Response syntax **:SCALE**[1-6]**:PT**<NR2>

Example
Transmission **:SCALE1:PT?**
Response **:SCALE1:PT 1000**

Function Queries the current setting of PT ratio for the specified input unit.

:SCALe [*channel no.*] :SC

■ Sets the SC ratio.

Syntax **:SCALe**[1 - 6]**:SC** <NR2>
<NR2> = 0.0001 to 10000

Example **:SCALE1:SC 1000**
Sets the SC ratio for channel 1 to 1000.

Function Sets the SC ratio for the specified input unit.

Notes
- Specifying a value which cannot be selected because of the number of input units installed results in an execution error.
- In 1P3W mode or above, for the channel specification, enter the number of the lowest-numbered channel in the combination. For example, when using input unit channels 1 to 3 in 3V3A mode, specify "1". The channels in combination can not be set individually.
- Unless the :SCALe[channel no.] :CONTrol command is set to ON, this setting is invalid even if the SC ratio is set.

:SCALe [*channel no.*] :SC?

■ Queries the SC ratio.

Syntax **:SCALe:SC**[1 - 6]**?**

Response syntax **:SCALE:SC**[1-6] <NR2>

Example
Transmission **:SCALE:SC1?**
Response **:SCALE:SC1 1000**

Function Queries the current setting of SC ratio for the specified input unit.

:SCALe [*channel no.*] ?

■ Queries the settings of the scaling function.

Syntax **:SCALe**[1 - 6]**?**

Response syntax **:SCALE**[1 - 6]**:CONTROL** <ON/OFF>, <ON/OFF>,<ON/OFF>**;PT** <NR2>**;CT** <NR2>**;SC** <NR2>

Example
Transmission **:SCALE1?**
Response **:SCALE1:CONTROL ON,ON,ON;PT 1000:CT 1000;SC 1000**

Function Queries the scaling settings for each input units.

:STARt

■ Starts all of the various timer settings at the beginning of a cycle.

Syntax **:STARt**

Example **:START**
Starts operations for each controls.

Function All of the various timer settings start at the beginning of a cycle. The operation is the same as pressing the START/STOP key on the panel.
Synchronized control

Integration start
Time averaging start
FD, printer start

Note After executing this command, integration is always operative. For this reason, the various settings can no longer be changed, and auto range settings become fixed at their current setting.

To change the range, execute the :INTEGrate:RESET command after the :STOP command is executed.

If after repeated start/stop operations the total time reaches 10,000 hours, an execution error results.
To ensure that the total time does not exceed 10,000 hours, follow the :STOP command with an :INTEGrat:RESET command.

:STOP

■ Stops all of the various timer settings at the beginning of a cycle.

Syntax **:STOP**

Example **:STOP**
Stops operations for each controls.

Function All of the various timer settings stop at the beginning of a cycle. The operation is the same as pressing the START/STOP key on the panel.

Note If after repeated start/stop operations the total time reaches 10,000 hours, an execution error results.
To ensure that the total time does not exceed 10,000 hours, follow the :STOP command with an :INTEGrat:RESET command.

:STIMe:CONTrol

■ Enables and disables the real time control.

Syntax **:STIMe:CONTrol** <ON/OFF>

Example **:STIME:CONTROL ON**
Enables the real time control.

Function Sets the real time control to on or off.

Note
- To start real time control execute the :STARt command, and to stop execute the :STOP command.
- When the timer time control is set to ON, the real time control is ignored.

:STIMe:CONTrol?

■ Queries the real time control.

Syntax **:STIMe:CONTrol?**

Response syntax **:STIME:CONTROL** <ON/OFF>

Example
Transmission **:STIME:CONTROL?**
Response **:STIME:CONTROL ON**

Function Queries the setting of the real time control to on or off.

:STIMe:STARTtime

■ Sets the start time of the real time control.

Syntax **:STIMe:STARTtime**
<year,month,day,hour,min>
year = 00 - 99
month = 1 - 12
day = 1 - 31
hour = 0 - 23
min = 0 - 59

Example **:STIME:STARTTIME 97,12,15,16,50**
Sets the start time for the real time control to 15 th, 12, 1997, 16:50.

Function Sets the start time for the real time control.

Error Execution error/ If the set data is not numerical value other than listed on the left.

Note It is not possible to set the seconds unit.

:STIMe:STARTtime?

■ Queries the start time of the real time control.

Syntax **:STIMe:STARTtime?**

Response syntax **:STIME:STARTTIME** <year,month,day,hour,min>

Example
Transmission **:STIME:STARTTIME?**
Response **:STIME:STARTTIME 97,12,15,16,50**

Function Queries the current setting of the start time for the real time control.

:STIMe:STOPTime

■ Sets the stop time of the real time control.

Syntax **:STIMe:STOPTime** <year,month,day,hour,min>

Example **:STIME:STOPTime 97,12,16,16,50**
Sets the stop time for the real time control to 15 th, 12, 1997, 16:50.

Function Sets the stop time for the real time control.

Error Execution error/ If the set data is not numerical value other than listed on the left.

Note It is not possible to set the seconds unit.

:STIMe:STOPTime?

■ Queries the stop time of the real time control.

Syntax **:STIMe:STOPTime?**

Response syntax **:STIME:STOPTIME** <year,month,day,hour,min>

Example
Transmission **:STIME:STOPTime?**
Response **:STIME:STOPTime 97,12,16,16,50**

Function Queries the current setting of the stop time for the real time control.

:STIMe?

■ Queries the real time control.

Syntax **:STIMe?**

Response syntax **:STIME:CONTROL** <ON/OFF>**;** **STARTTIME** <year>,<month>,<day>, <hour>,<min>**;STOPTTIME** <year>, <month>,<day>,<hour>,<min>

Example
Transmission **:STIME?**
Response **:STIME:CONTROL ON;STARTTIME 97,12,16,50;STOPTIME 97,12,16,16,50**

Function Queries the settings of real time control.

:TIMER:CONTrol

■ Enables and disables the timer control.

Syntax **:TIMER:CONTrol** <ON/OFF>

Example **:TIMER:CONTROL ON**
Enables the timer control.

Function Enables and disables the timer control.

Note To start timer time control execute the :STARt command, and to stop execute the :STOP command.

:TIMER:CONTrol?

■ Queries the timer control.

Syntax **:TIMER:CONTrol?**

Response syntax **:TIMER:CONTROL** <ON/OFF>

Example
Transmission **:TIMER:CONTROL?**
Response **:TIMER:CONTROL ON**

Function Queries the current setting of the timer control.

:TIMER:TIME

■ Sets the timer.

Syntax **:TIMER:TIME** <hour, min>
<hour> = 0 - 10000
<min> = 0 - 59

Example **:TIMER:TIME 00,10**
Sets the timer to 10 minutes.

Function Sets the timer.

Note The timer is set up to 10000 hours.

:TIMER:TIME?

■ Queries timer setting.

Syntax **:TIMER:TIME?**

Response syntax **:TIMER:TIME** <hour, min>

Example
Transmission **:TIMER:TIME?**
Response **:TIMER:TIME 00000,10**

Function Queries the current setting of timer.

:TIMER?

■ Queries the timer control.

Syntax **:TIMER?**

Response syntax **:TIMER:CONTROL** <ON/OFF>**;**
TIME <hour,min>

Example
Transmission **:TIMER?**
Response **:TIMER:CONTROL ON;TIME 00000,10**

Function Queries the current settings for timer control.

:TRANsmit:COLumn

■ Select the numerical data format.

Syntax **TRANsmit:COLumn** <NR1>
<NR1> = 0, 1

Example
Transmission When :TRANsmit:COLumn 0
Response **:MEAS? U1,I1**
78.01E+00;5.012E+00

Transmission When :TRANsmit:COLumn 0
Response **:MEAS? U1,I1**
+078.01E+00;+05.012E+00

Function Sets the numerical data format of :MEASure?
If <NR1> = 0, the leading zero is omitted from the mantissa of NR3 numeric data.
If <NR1> = 1, the number of NR3 numeric data is constant (the leading zero is not omitted from the mantissa).

Note
- <NR1> can be accepted in NRf format, but decimal fractions are rounded off.
- This has no effect on integration time (TIME), display blanking, calculation impossibility, out of range values.
- The setting of powering on is 0.

Error Execution error/ If data is set other than NRf format.

:TRANsmit:COLumn ?

■ Queries the numerical data format.

Syntax **TRANsmit:COLumn?**

Response syntax
Headers: ON
:TRANSMIT:COLUMN <0/1>
Headers: OFF
<0/1>

Example
Transmission **:TRAN:COL?**
Response
(headers on) **:TRANSMIT:COLUMN 0**
(headers off) **0**

Function Queries the current setting of numerical data format of :MEASure?.
The returned numerical value corresponds to the setting state of the NR3 numeric data as follows:
If <NR1> = 0, the leading zero is omitted from the mantissa of NR3 numeric data.
If <NR1> = 1, the number of NR3 numeric data is constant (the leading zero is not omitted from the mantissa).

Note With this query, if any error occurs, no response message is produced.

Errors
- Query error/ If the response message is longer than 2000 bytes.
- System error/ This query is not executed. A device dependent error occurs.

:TRANsmit:SEParator

■ Sets the message unit separator for response messages.

Syntax **TRANsmit:SEParator** <NR1>

<NR1> = 0, 1

Example

Transmission **:TRAN:SEP 0;:HEAD OFF;:MEAS? U1,I1**
Response **101.20E+00;2.1200E+00**

Transmission **:TRAN:SEP 1;:HEAD OFF;:MEAS? U1,I1**
Response **101.20E+00,2.1200E+00**

Transmission **:TRAN:SEP 0;:HEAD ON;:MEAS? U1,I1**
Response **U1 101.20E+00;I1 2.1200E+00**

Transmission **:TRAN:SEP 1;:HEAD ON;:MEAS? U1,I1**
Response **U1 101.20E+00;I1 2.1200E+00**

Function
- When the header is off, the data separator is set as follows:
  If <NR1> = 0, the separator is set to semicolon ";".
  If <NR1> = 1, the separator is set to comma ",".
- <NR1> can be accepted in NRf format, but its effective value will be rounded.

Notes
- Even if you set the command to the comma, message unit separator will appear as a semicolon when headers are on.
- After <NR1> has been rounded as explained above, if it becomes a numerical value other than 0, the message unit separator is set to the comma.

Errors
- Exection error/ If the setting data is other than NRf format.
- Even if a system error occurs, this query is executed.

:TRANsmit:SEParator?

■ Queries the message unit separator for response messages.

Syntax **:TRANsmit:SEParator?**

Response syntax

Headers: ON
:TRANSMIT:SEPARATOR <0/1>
Headers: OFF
<0/1>

Example

Transmission **:TRAN:SEP?**
Response
(headers on) **:TRANSMIT:SEPARATOR 1**
(headers off) **1**

Function
- The message unit separator for response messages is returned as 0 or 1.
- The returned numerical value corresponds to the setting state of the data separator as follows:
  If <NR1> = 0, the separator is a semicolon ";".
  If <NR1> = 1, the separator is a comma ",".

Errors
- Query error/ If the response message is longer than 2000 bytes.
- System error/ This query is not executed. A device dependent error occurs.

Note With this query, if any error occurs, no response message is produced.

:TRANsmit:TERMinator

■ Sets the data terminator for response messages.

Syntax **:TRANsmit:TERMinator** <NR1>

<NR1> = 0, 1 (0: LF, 1: CR+LF)

In either case, an LF and EOI are output at the same time.

Example **:TRANSMIT:TERMINATOR 1**

Sets the message terminator transmitted from this unit to CR+LF.

Function
- For the talker, the terminator (delimiter) of the response message sent by this unit is switched. (When this unit is the listener, either can always be used.)
- This command setting value is initialized to 1 (CR+LF) when the power is turned on or a reset is carried out by a key operation. It is not affected by an *RST common command.
- The setting value is accepted in NRf format, but decimal fractions are rounded off.

Errors Execution error / If the setting data is negative value.

:TRANsmit:TERMinator?

■ Queries the data terminator for response messages.

Syntax **:TRANsmit:TERMinator?**

Response syntax **:TRANSMIT:TERMINATOR** <NR1>

Example

Transmission **:TRANSMIT:TERMINATOR?**

Response **:TRANSMIT:TERMINATOR 0**

Indicates the message terminator transmitted from this unit has been set to LF.

Function Queries the message terminator (delimiter) which is transmitted to this unit at talker.

:VOLTage [*channel no.*] :AUTO

■ Enables and disables the voltage auto ranging.

Syntax **:VOLTage**[1-6]**:AUTO** <ON/OFF>

Example **:VOLTAGE1:AUTO ON**

Sets to the voltage auto ranging for channel 1 of the input unit.

Function Enables or disables the voltage auto ranging for the specified input unit.

Note In 1P3W mode or above, for the channel specification, enter the number of the lowest-numbered channel in the combination. For example, when using input unit channels 1 to 3 in 3V3A mode, specify "1".

:VOLTage [*channel no.*] :AUTO?

■ Queries whether or not voltage auto ranging is enabled.

Syntax **:VOLTage**[1 - 6]**:AUTO?**

Response syntax **:VOLTAGE**[1-6]**:AUTO** <ON/OFF>

Example
Transmission **:VOLTAGE1:AUTO?**
Response **:VOLTAGE1:AUTO ON**

Function Queries the current setting of the voltage auto ranging for specified input unit.

:VOLTage [*channel no.*] :MEAN

■ Sets the rectifier type of the voltage range.

Syntax **:VOLTage[**1 - 6**]:MEAN** <ON/OFF>

Example **:VOLTAGE1:MEAN ON**
Sets to the MEAN measurement on the voltage side for channel 1 of the input unit.

Function Sets the rectifier type (MEAN/RMS) of the voltage range for the specified input unit.

Note In 1P3W mode or above, for the channel specification, enter the number of the lowest-numbered input unit in the combination. For example, when using input unit channels 1 to 3 in 3V3A mode, specify "1".

:VOLTage [*channel no.*] :MEAN?

■ Queries the rectifier type of the voltage range.

Syntax **:VOLTage[**1 - 6**]:MEAN?**

Response syntax **:VOLTAGE[**1-6**]:MEAN** <ON/OFF>

Example
Transmission **:VOLTAGE1:MEAN?**
Response **:VOLTAGE1:MEAN ON**

Function Queries the current setting of the rectifier type of the voltage range for the specified input unit.

:VOLTage [*channel no.*] :RANGe

■ Sets the voltage range.

Syntax **:VOLTage**[1 - 6]**:RANGe** <NR1>

<NR1> =

(9600) 6, 15, 30, 60, 150, 300, 600, 1000

(9601) 60, 150, 300, 600, 1000

(9602) 6, 15, 30, 60, 150, 300, 600

Example **:VOLTAGE1:RANGE 150**

Sets the voltage range for channel 1 of input unit to 150 V.

Function Sets the voltage range for the specified input unit.

Error Execution error/ If the setting data is other than listed on the left.

Note
- Depending on the input unit, the value which can be set varies.
- In 1P3W mode or above, for the channel specification, enter the number of the lowest-numbered channel in the combination. For example, when using input unit channels 1 to 3 in 3V3A mode, specify "1".

:VOLTage [*channel no.*] :RANGe?

■ Queries the voltage range.

Syntax **:VOLTage**[1 - 6]**:RANGe?**

Response syntax **:VOLTAGE[**1-6**]:RANGE** <NR1>

Example

Transmission **:VOLTAGE1:RANGE?**

Response **:VOLTAGE1:RANGE 60**

Function Queries the current setting of voltage range for specified channel of the input unit.

:VOLTage [*channel no.*] ?

■ Queries the voltage measurement.

Syntax **:VOLTage**[1 - 6]**?**

Response syntax **:VOLTAGE1:AUTO** <ON/OFF>**;**
MEAN <ON/OFF>**;RANGE** <NR1>

Example

Transmission **:VOLTAGE1?**

Response **:VOLTAGE1:AUTO ON;MEAN ON;RANGE 60**

Function Queries the settings for voltage of specified input unit.

:WAVEpeak [*channel no.*]

■ Selects whether the waveform peak measurement function applies to the voltage or current.

Syntax **:WAVEpeak**[1 - 6] <U/I>

Example **:WAVEPEAK1 U**
Sets the waveform peak measurement function for channel 1 of the input unit to voltage.

Function Selects whether the waveform peak measurement function applies to the voltage or current.

Notes
- With a single input unit, it is only possible to select either one of the voltage and current.
- Irrespective of the connection mode, it is possible to make a separate setting for each unit.

:WAVEpeak[*channel no.*]?

■ Queries the setting of waveform peak measurement function

Syntax **:WAVEpeak**[1 - 6] <U/I>

Example
Transmission **:WAVEPEAK1?**
Response **:WAVEPEAK1 U**

Function Queries the setting of waveform peak measurement function

12.5 Command Summary

12.5.1 Standard Commands

[ch]: channel no. / [No.]: number of items

Command	Data format (number of data items)	Explanation	Page
*CLS		Clears STB and ESR.	131
*ESE	NR1 numerical data (1)	Sets bitmask for ESR.	131
*ESE?		Queries bitmask for ESR.	131
*ESE0	NR1 numerical data (1)	Sets the event status enable register for ESE0.	132
*ESE0?		Queries the event status enable register for ESE0.	132
*ESE1	NR1 numerical data (1)	Sets the event status enable register for ESE1.	132
*ESE1?		Queries the event status enable register for ESE1	133
*ESE2	NR1 numerical data (1)	Sets the event status enable register for ESE2.	133
*ESE2?		Queries the event status enable register for ESE2.	133
*ESE[ch]	NR1 numerical data (1)	Sets the event status enable register for channels.	134
*ESE[ch]?		Queries the event status enable register for channels.	134
*ESEF	NR1 numerical data (1)	Sets the event status enable register for ESEF.	134
*ESEF?		Queries the event status enable register for ESEF.	135
*ESR?		Queries the event status register.	135
*ESR0?		Queries the event status register 0.	135
*ESR1?		Queries the event status register 1.	135
*ESR2?		Queries the event status register 2.	136
*ESR[ch]?		Queries the event status register for channels.	136
*ESRF?		Queries the event status register F.	136
*IDN?		Queries device ID.	137
*OPC		Issues service request after execution completion.	137
*OPC?		Queries execution completion.	137
*OPT?		Queries the device option provision.	138
*RST		Queries the initial setting.	138
*SRE	NR1 numerical data (1)	Sets the service request enable register.	139
*SRE?		Reads the service request enable register.	139
*STB?		Reads the status byte register.	139
*TRG		Performs sampling once.	140
*TST?		Queries the result of the self-test.	140
*WAI		Waits until sampling is fully completed.	140

12.5.2 Commands Specific to the 3193

[ch]: channel no. / [No.]: number of items

Command	Data format ( ): number of data items	Explanation	Page
:AOUT :AOUT?	Character data	Sets D/A output items. Queries D/A output items.	141
:AVEraging:COEFficient :AVEraging:COEFficient?	NR1 numerical data	Sets the averaging or attenuation value. Queries the averaging or attenuation value.	142
:AVEraging:MODE :AVEraging:MODE?	TIM/LIN/EXP/OFF NR1 numerical data (1)	Select averaging mode. Queries averaging mode.	142
:AVEraging?		Queries averaging settings.	143
:BACKlight :BACKlight?	ON/OFF	Enables and disables back-light. Queries the back light auto off time.	143
:BACKlight:AUTO :BACKlight:AUTO?	NR1 numerical data (1)	Sets the back light auto off time. Queries the back light auto off time.	143 144
:BEEPer :BEEPer?	ON/OFF	Enables and disables beep sound. Enables and disables beep sound.	144
:CALCulate[ch]:DENominator :CALCulate[ch]:DENominator?	Character data (4)	Sets the items for the denominator in the specified efficiency formula. Queries the items for the denominator in the specified efficiency formula.	144 145
:CALCulate[ch]:NUMerator :CALCulate[ch]:NUMerator?	Character data (4)	Set items for the numerator in the specified efficiency formula. Queries items for the numerator in the specified efficiency formula.	145
:CALCulate[ch]?		Queries the settings for the efficiency formula.	146
:CLOCK :CLOCK?	NR1 numerical data (6)	Sets the system clock. Queries the system clock.	146
:COUPling[ch] :COUPling[ch]?	Character data (1)	Sets the coupling mode. Queries the coupling mode.	147
:CURRent[ch]:AUTO :CURRent[ch]:AUTO?	ON/OFF	Enables and disables the current auto ranging. Queries the setting of current auto ranging.	147
:CURRent[ch]:MEAN :CURRent[ch]:MEAN?	ON/OFF	Select the rectifier type (MEAN/ RMS). Queries the rectifier type	148
:CURRent[ch]:RANGe :CURRent[ch]:RANGe?	NR2 numerical data (1)	Sets the current range. Queries the current range.	148 149
:CURRent[ch]?		Queries the current settings.	149

[ch]: channel no. / [No.]: number of items

Command	Data format ( ): number of data items	Explanation	Page
:DATAout?		Queries the all setting items on FDD or printer	149
:DATAout:ITEM?		Queries the data output items.	150
:DATAout:ITEM:ALLClear		Clears default output settings.	150
:DATAout:ITEM:EFFiciency :DATAout:ITEM:EFFiciency?	NR1 numerical data (1)	Sets the output data of efficiency measurement value. Queries the output data of efficiency measurement value.	150 151
:DATAout:ITEM:EXTernalin :DATAout:ITEM:EXTernalin?	NR1 numerical data (1)	Sets the output data of external signal input. Queries the output data of external signal input.	151
:DATAout:ITEM:FREQuency :DATAout:ITEM:FREQuency?	NR1 numerical data (1)	Sets the frequency output data. Queries the frequency output data.	151 152
:DATAout:ITEM:INTEGrate :DATAout:ITEM:INTEGrate?	NR1 numerical data (10)	Sets the output data of integration value. Queries the output data of integration value.	152 152
:DATAout:ITEM:LOADfactor :DATAout:ITEM:LOADfactor?	NR1 numerical data (2)	Sets the output data of load factor measurement value. Queries the output data of load factor measurement value.	153
:DATAout:ITEM:NORMal :DATAout:ITEM:NORMal?	NR1 numerical data (8)	Sets the output data of normal measurement value. Queries the output data of normal measurement value.	154
:DATAout:ITEM:SUM :DATAout:ITEM:SUM?	NR1 numerical data (7)	Sets the output data of SUM value. Queries the output data of SUM value.	155
:DATAout:FD :DATAout:FD?	ON/OFF	Enables and disables saving data on a floppy disk. Queries the setting of saving data on a floppy disk.	155 156
:DATAout:PRINter :DATAout:PRINter?	ON/OFF	Enables and disables outputting on a printer. Queries the output of the printer.	156
:DEMAg	Character data (6)	Degauss current	156
:DISPlay:DETail[ch] :DISPlay:DETail[ch]?	Character data (30)	Set items to be displayed on the "Detail display" screen of the channel screen. Queries items to be displayed on the "Detail display" screen for the specified channel.	157
:DISPlay:EFFiciency		Displays the Efficiency screen.	158
:DISPlay:EXTernalin		Displays the External input screen.	158

[ch]: channel no. / [No.]: number of items

Command	Data format ( ): number of data	Explanation	Page
:DISPlay:INTEGrate[ch]		Displays the Integration screen for the specified channel.	158
:DISPlay:MAGnify[ch] :DISPlay:MAGnify[ch]?	Character data (4)	Sets items to be displayed on the enlarged screen for the specified channel Queries items to be displayed on the enlarged screen for the specified channel.	159
:DISPlay:SELect[No.] :DISPlay:SELect[No.]?	Character data (16)	Sets items to be displayed on the Selection screen. Queries items to be displayed on the Selection screen.	160
:DISPlay?		Queries the screen displays.	161
:EXTernalin[ch]:RANGe :EXTernalin[ch]:RANGe?	NR1 numerical data (1)	Sets the voltage range of the 9603. Queries the voltage range of the 9603.	161
:EXTernalin[ch]:SCALe :EXTernalin[ch]:SCALe?	NR2 numerical data (1)	Sets the scaling value of the 9603. Queries the scaling value of the 9603.	161 162
:EXTernalin[ch]:UNIT :EXTernalin[ch]:UNIT?	Character data (1)	Sets the units for channel of the 9603 Queries the units for channel of the 9603	162
:EXTernalinB:PULSe :EXTernalinB:PULSe?	ON/OFF	Sets the input type for channel B of the 9603. Queries the input type for channel B of the 9603.	162 163
:EXTernalin[ch]?		Queries the settings of the 9603.	163
:FD:MANual		Saves data on a floppy disk.	163
:FREQuency[ch]:AUTO :FREQuency[ch]:AUTO?	NR1 numerical data (1)	Sets the auto ranging of the frequency measurement. Queries the auto ranging of the frequency measurement.	163 164
:FREQuency[ch]:RANGe :FREQuency[ch]:RANGe?	NRf numerical data (1)	Sets the frequency range. Queries the frequency range.	164
:FREQuency[ch]:SOURce :FREQuency[ch]:SOURce?	Character data (1)	Sets the channel source of the frequency measurement. Queries the channel source of the frequency measurement.	165
:FREQuency[ch]?		Queries the settings for frequency	165
:HEADer :HEADer?	ON/OFF	Enables and disables headers. Queries the headers enablement.	166
:HOLD :HOLD?	ON/OFF	Enables or disables holding the screen displays. Queries the holding screen displays enablement.	166

[ch]: channel no. / [No.]: number of items

Command	Data format ( ): number of data items	Explanation	Page
:INTEGrate:RESEt		Resets the integration value.	167
:INTEGrate:STARt :INTEGrate:STOP	NR1 numerical data (6) NR1 numerical data (6)	Starts the integration. Stops integration.	167
:INTEGrate?		Queries the start channles currently operating integration.	168
:INTERval:CONTrol :INTERval:CONTrol?	ON/OFF	Enables and disables the interval time control. Queries the interval time control.	168
:INTERval:TIME :INTERval:TIME?	NR1 numerical data (3)	Sets the interval time. Queries the interval time.	168
:INTERval?		Queries the interval time control.	169
:KEYLock :KEYLock?	ON/OFF	Enables of disables key lock. Queries the current setting of key lock.	169
:LANGuage :LANGuase?	Character data	Sets the language to be displayed. Queries the language to be displayed.	169 170
:LPF[ch] :LPF[ch]?	NRf numerical data (1)	Sets the low-pass filter Queries the low-pass filter	170
:MATH :MATH?	NR1 numerical data (1)	Sets the calculation. Queries the calculation.	170 171
:MEASure:ITEM :MEASure:ITEM?	Character data (35)	Specify the default items to be transferred. Queries the data output items.	171
:MEASure:ITEM:ALLClear		Clears all default items to be transferred.	171
:MEASure:ITEM:EFFiciency :MEASure:ITEM:EFFiciency?	NR1 numerical data (1)	Sets the output data of efficiency measurement value. Queries the output data of efficiency measurement value.	172
:MEASure:ITEM:EXTernalin :MEASure:ITEM:EXTernalin?	NR1 numerical data (1)	Sets the output data of external signal input. Queries the output data of external signal input.	172 173
:MEASure:ITEM:FREQuency :MEASure:ITEM:FREQuency?	NR1 numerical data (1)	Sets the frequency output data. Queries the frequency output data.	173
:MEASure:ITEM:INTEGrate :MEASure:ITEM:INTEGrate?	NR1 numerical data (10)	Sets the output item for integration. Queries the output item for integration.	174
:MEASure:ITEM:LOADfactor :MEASure:ITEM:LOADfactor?	NR1 numerical data (2)	Sets the output item for the load factor. Queries the output item for the load factor?	175
:MEASure:ITEM:NORMal :MEASure:ITEM:NORMal?	NR1 numerical data (8)	Sets the output item for the normal measurement. Queries the output item for the normal measurement.	176
:MEASure:ITEM:SUM :MEASure:ITEM:SUM?	NR1 numerical data (7)	Sets the output item for the SUM value. Queries the output item for the SUM value.	177
:MEASure?	Character data (70)	Queries the specified data.	178

[ch]: channel no. / [No.]: number of items

Command	Data format ( ): number of data items	Explanation	Page
:MODE :MODE?	Character data (6)	Sets the connection mode. Queries the connection mode.	179
:PEAKhold :PEAKhold?	ON/OFF	Enables and disables the peak hold function. Queries the peak hold function.	179
:PHF[ch] :PHF[ch]?	ON/OFF	Sets the phase polarity discrimination filter. Queries the phase polarity discrimination filter.	180
:PRINt:FEED		Feeds printer paper.	180
:PRINt:HCOPy		Outputs the screen displays.	180
:PRINt:HELP		Prints settings in HELP mode.	180
:PRINt:MANual		Executes manual printing.	181
:RESPonse :RESPonse?	Character data (1)	Sets the response speed. Queries the response speed.	181
:RTC:COUNt :RTC:COUNt?	NR1 numerical data (1)	Sets the sampling count. Queries the sampling count.	181 182
:RS232c:ANSWer :RS232c:ANSWer?	ON/OFF	Sets whether or not the execution confirmation message. Queries whether or not the execution confirmation message are enabled	182
:RS232c:ERRor?		Queries whether or not the RS-232C communications error information are enabled.	183
:RS232c:HANDshake :RS232c:HANDshake?	Character data (1)	Sets the RS-232C communications handshake Queries the setting for the RS-232C communications handshake.	183 184
:RS232c?		Queries the setting for the RS-232C communications handshake.	184
:SCALe[ch]:CONTrol :SCALe[ch]:CONTrol?	ON/OFF	Enables and disables scaling function of PT, CT, SC ratios. Queries the setting of scaling function of PT, CT, SC ratios.	184 185
:SCALe[ch]:CT :SCALe[ch]:CT?	NR2 numerical value (1)	Sets the CT ratio. Queries the CT ratio.	185
:SCALe[ch]:PT :SCALe[ch]:PT?	NR2 numerical value (1)	Sets the PT ratio. Queries the PT ratio.	186
:SCALe[ch]:SC :SCALe[ch]:SC?	NR2 numerical value (1)	Sets the SC ratio. Queries the SC ratio.	186 187
:SCALe[ch]?		Queries the settings of the scaling	187
:STARt :STOP		Starts measurement Stops measurement	187 188

[ch]: channel no. / [No.]: number of items

Command	Data format ( ): number of data items	Explanation	Page
:STIMe:CONTrol :STIMe:CONTrol?	ON/OFF	Enables and disables the real time control. Queries the real time control.	188
:STIMe:STARTtime :STIMe:STARTtime?	NR1 numerical value (5)	Sets the start time of the real time control. Queries the start time of the real time control.	188 189
:STIMe:STOPTime :STIMe:STOPTime?	NR1 numerical value (5)	Sets the stop time of the real time control. Queries the stop time of the real time control.	189
:STIMe?		Queries the real time control.	189
:TIMER:CONTrol :TIMER:CONTrol?	ON/OFF	Enables and disables the timer control. Queries the timer control.	190
:TIMER:TIME :TIMER:TIME?	NR1 numerical value (2)	Sets the timer. Queries timer setting.	190
:TIMER?		Queries the timer control.	191
:TRANsmit:COLumn :TRANsmit:COLumn?	NR1 numerical value (1)	Sets the numerical data format. Queries the numerical data format.	191
:TRANsmit:SEParator :TRANsmit:SEParator?	NR1 numerical value (1)	Sets the message unit separator for response messages. Queries the message unit separator for response messages.	192
:TRANsmit:TERMinator :TRANsmit:TERMinator?	NR1 numerical value (1)	Sets the data terminator for response messages. Queries the data terminator for response messages.	193
:VOLTage[ch]:AUTO :VOLTage[ch]:AUTO?	ON/OFF	Enables and disables the voltage auto ranging. Queries whether or not voltage auto ranging is enabled.	193 194
:VOLTage[ch]:MEAN :VOLTage[ch]:MEAN?	ON/OFF	Sets the rectifier type of the voltage range. Queries the rectifier type of the voltage range.	194
:VOLTage[ch]:RANGe :VOLTage[ch]:RANGe?	NR1 numerical value (1)	Sets the voltage range. Queries the voltage range.	195
:VOLTage[ch]?		Queries the voltage range.	195
:WAVEpeak[ch] :WAVEpeak[ch]?	Character data (1)	Selects waveform peak value Queries the waveform peak value	196

12.5.3 Valid Command According to Condition (Standard Command)

Condition / Command	Integration reset			Integration start			Integration stop		
	HOLD		PEAK	HOLD		PEAK	HOLD		PEAK
	ON	OFF		ON	OFF		ON	OFF	
*CLS	●	●	●	●	●	●	●	●	●
*ESE	●	●	●	●	●	●	●	●	●
*ESE?	●	●	●	●	●	●	●	●	●
*ESE0	●	●	●	●	●	●	●	●	●
*ESE0?	●	●	●	●	●	●	●	●	●
*ESE1	●	●	●	●	●	●	●	●	●
*ESE1?	●	●	●	●	●	●	●	●	●
*ESE2	●	●	●	●	●	●	●	●	●
*ESE2?	●	●	●	●	●	●	●	●	●
*ESE[ch]	●	●	●	●	●	●	●	●	●
*ESE[ch]?	●	●	●	●	●	●	●	●	●
*ESEF	●	●	●	●	●	●	●	●	●
*ESEF?	●	●	●	●	●	●	●	●	●
*ESR?	●	●	●	●	●	●	●	●	●
*ESR0?	●	●	●	●	●	●	●	●	●
*ESR1?	●	●	●	●	●	●	●	●	●
*ESR2?	●	●	●	●	●	●	●	●	●
*ESRF?	●	●	●	●	●	●	●	●	●
*ESR[ch]	●	●	●	●	●	●	●	●	●
*ESR[ch]?	●	●	●	●	●	●	●	●	●
*IDN?	●	●	●	●	●	●	●	●	●
*OPC	●	●	●	●	●	●	●	●	●
*OPC?	●	●	●	●	●	●	●	●	●
*OPT?	●	●	●	●	●	●	●	●	●
*RST	●	●	●	●	●	●	●	●	●
*SRE	●	●	●	●	●	●	●	●	●
*SRE?	●	●	●	●	●	●	●	●	●
*STB?	●	●	●	●	●	●	●	●	●
*TRG	—	●	●	—	●	●	—	●	●
*TST?	●	—	—	—	—	—	—	—	—
*WAI	●	●	●	●	●	●	●	●	●

●: can be executed
—: cannot be executed.

Integration reset : Integration is stopped and integration time and value is reset
Integration start (INTEG): Integration is in progress
Integration stop (INTEG blue): Integration is stopped
HOLD(HOLD lit or flashing): Displays are held

12.5.4 Valid Command According to Condition (Specific Command)

[ch]: channel no. / [No.]: number of items

Command \ Condition	Integration reset			Integration start			Integration stop		
	HOLD		PEAK	HOLD		PEAK	HOLD		PEAK
	ON	OFF		ON	OFF		ON	OFF	
:AOUT	●	—	—	—	—	—	—	—	—
:AOUT?	●	●	●	●	●	●	●	●	●
:AVEraging:COEFficient	●	—	—	—	—	—	—	—	—
:AVEraging:COEFficient?	●	●	●	●	●	●	●	●	●
:AVEraging:MODE	●	—	—	—	—	—	—	—	—
:AVEraging:MODE?	●	●	●	●	●	●	●	●	●
:AVEraging?	●	●	●	●	●	●	●	●	●
:BACKlight	●	●	●	●	●	●	●	●	●
:BACKlight:AUTO	●	●	●	●	●	●	●	●	●
:BACKlight:AUTO?	●	●	●	●	●	●	●	●	●
:BACKligt?	●	●	●	●	●	●	●	●	●
:BEEPer	●	●	●	●	●	●	●	●	●
:BEEPer?	●	●	●	●	●	●	●	●	●
:CALCulate[ch]:DENominator	●	—	—	—	—	—	—	—	—
:CALCulate[ch]:DENominator?	●	●	●	●	●	●	●	●	●
:CALCulate[ch]:NUMerator	●	—	—	—	—	—	—	—	—
:CALCulate[ch]:NUMerator?	●	●	●	●	●	●	●	●	●
:CALCulate[ch]?	●	●	●	●	●	●	●	●	●
:CLOCK	●	—	—	—	—	—	—	—	—
:CLOCK?	●	●	●	●	●	●	●	●	●
:COUPling[ch]	●	—	—	—	—	—	—	—	—
:COUPling[ch]?	●	●	●	●	●	●	●	●	●
:CURRent[ch]:AUTO?	●	—	—	—	—	—	—	—	—
:CURRent[ch]:AUTO	●	●	●	●	●	●	●	●	●
:CURRent[ch]:MEAN	●	—	—	—	—	—	—	—	—
:CURRent[ch]:MEAN?	●	●	●	●	●	●	●	●	●
:CURRent[ch]:RANGe	●	—	—	—	—	—	—	—	—
:CURRent[ch]:RANGe?	●	●	●	●	●	●	●	●	●
:CURRent[ch]?	●	●	●	●	●	●	●	●	●

[ch]: channel no. / [No.]: number of items

Command \ Condition	Integration reset			Integration start			Integration stop		
	HOLD		PEAK	HOLD		PEAK	HOLD		PEAK
	ON	OFF		ON	OFF		ON	OFF	
:DATAout:ITEM:ALLClear	●	–	–	–	–	–	–	–	–
:DATAout:ITEM:EFFiciency	●	–	–	–	–	–	–	–	–
:DATAout:ITEM:EFFiciency?	●	●	●	●	●	●	●	●	●
:DATAout:ITEM:EXTernalin	●	–	–	–	–	–	–	–	–
:DATAout:ITEM:EXTernalin?	●	●	●	●	●	●	●	●	●
:DATAout:ITEM:FREQuency	●	–	–	–	–	–	–	–	–
:DATAout:ITEM:FREQuency?	●	●	●	●	●	●	●	●	●
:DATAout:ITEM:INTEGrate	●	–	–	–	–	–	–	–	–
:DATAout:ITEM:INTEGrate?	●	●	●	●	●	●	●	●	●
:DATAout:ITEM:LOADfactor	●	–	–	–	–	–	–	–	–
:DATAout:ITEM:LOADfactor?	●	●	●	●	●	●	●	●	●
:DATAout:ITEM:NORMal	●	–	–	–	–	–	–	–	–
:DATAout:ITEM:NORMal?	●	●	●	●	●	●	●	●	●
:DATAout:ITEM:SUM	●	–	–	–	–	–	–	–	–
:DATAout:ITEM:SUM?	●	●	●	●	●	●	●	●	●
:DATAout:ITEM?	●	●	●	●	●	●	●	●	●
:DATAout:FD	●	●	●	–	–	–	–	–	–
:DATAout:FD?	●	●	●	●	●	●	●	●	●
:DATAout:PRINter	●	●	●	–	–	–	–	–	–
:DATAout:PRINter?	●	●	●	●	●	●	●	●	●
:DATAout?	●	●	●	●	●	●	●	●	●
:DEMAg	●	–	–	–	–	–	–	–	–
:DISPlay:DETail[ch]	●	–	–	–	–	–	–	–	–
:DISPlay:DETail[ch]?	●	●	●	●	●	●	●	●	●
:DISPlay:EFFiciency	●	●	●	●	●	●	●	●	●
:DISPlay:EXTernalin	●	●	●	●	●	●	●	●	●
:DISPlay:INTEGrate[ch]	●	●	●	●	●	●	●	●	●
:DISPlay:MAGnify[ch]	●	–	–	–	–	–	–	–	–
:DISPlay:MAGnify[ch]?	●	●	●	●	●	●	●	●	●
:DISPlay:SELect[No.]	●	–	–	–	–	–	–	–	–
:DISPlay:SELect[No.]?	●	●	●	●	●	●	●	●	●
:DISPlay?	●	●	●	●	●	●	●	●	●

[ch]: channel no. / [No.]: number of items

Command \ Condition	Integration reset			Integration start			Integration stop		
	HOLD		PEAK	HOLD		PEAK	HOLD		PEAK
	ON	OFF		ON	OFF		ON	OFF	
:EXTernalin[ch]:RANGe	●	—	—	—	—	—	—	—	—
:EXTernalin[ch]:RANGe?	●	●	●	●	●	●	●	●	●
:EXTernalin[ch]:SCALe	●	—	—	—	—	—	—	—	—
:EXTernalin[ch]:SCALe?	●	●	●	●	●	●	●	●	●
:EXTernalin[ch]:UNIT	●	—	—	—	—	—	—	—	—
:EXTernalin[ch]:UNIT?	●	●	●	●	●	●	●	●	●
:EXTernalinB:PULSe	●	—	—	—	—	—	—	—	—
:EXTernalinB:PULSe?	●	●	●	●	●	●	●	●	●
:EXTernalin[ch]?	●	●	●	●	●	●	●	●	●
:FD:MANual	●	●	●	—	—	—	●	●	●
:FREQuency[ch]:AUTO	●	—	—	—	—	—	—	—	—
:FREQuency[ch]:AUTO?	●	●	●	●	●	●	●	●	●
:FREQuency[ch]:RANGe	●	—	—	—	—	—	—	—	—
:FREQuency[ch]:RANGe?	●	●	●	●	●	●	●	●	●
:FREQuency[ch]:SOURce	●	—	—	—	—	—	—	—	—
:FREQuency[ch]:SOURce?	●	●	●	●	●	●	●	●	●
:FREQuency[ch]?	●	●	●	●	●	●	●	●	●
:HEADer	●	—	—	—	—	—	—	—	—
:HEADer?	●	●	●	●	●	●	●	●	●
:HOLD	●	●	●	●	●	●	●	●	●
:HOLD?	●	●	●	●	●	●	●	●	●
:INTEGrate:RESEt	—	—	—	—	—	—	●	—	—
:INTEGrate:STARt	●	●	●	●	●	●	●	●	●
:INTEGrate:STOP	—	—	—	●	●	●	●	●	●
:INTEGrate?	●	●	●	●	●	●	●	●	●
:INTERval:CONTrol	●	—	—	—	—	—	—	—	—
:INTERval:CONTrol?	●	●	●	●	●	●	●	●	●
:INTERval:TIME	●	—	—	—	—	—	—	—	—
:INTERval:TIME?	●	●	●	●	●	●	●	●	●
:INTERval?	●	●	●	●	●	●	●	●	●
:KEYLock	●	●	●	●	●	●	●	●	●
:KEYLock?	●	●	●	●	●	●	●	●	●
:LANGuage	●	●	●	●	●	●	●	●	●
:LANGuage?	●	●	●	●	●	●	●	●	●
:LPF[ch]	●	—	—	—	—	—	—	—	—
:LPF[ch]?	●	●	●	●	●	●	●	●	●
:MATH	●	—	—	—	—	—	—	—	—
:MATH?	●	●	●	●	●	●	●	●	●

[ch]: channel no. / [No.]: number of items

Command \ Condition	Integration reset			Integration start			Integration stop		
	HOLD		PEAK	HOLD		PEAK	HOLD		PEAK
	ON	OFF		ON	OFF		ON	OFF	
:MEASure:ITEM	●	–	–	–	–	–	–	–	–
:MEASure:ITEM:ALLClear	●	–	–	–	–	–	–	–	–
:MEASure:ITEM:EFFiciency	●	–	–	–	–	–	–	–	–
:MEASure:ITEM:EFFiciency?	●	●	●	●	●	●	●	●	●
:MEASure:ITEM:EXTernalin	●	–	–	–	–	–	–	–	–
:MEASure:ITEM:EXTernalin?	●	●	●	●	●	●	●	●	●
:MEASure:ITEM:FREQuency	●	–	–	–	–	–	–	–	–
:MEASure:ITEM:FREQuency?	●	●	●	●	●	●	●	●	●
:MEASure:ITEM:INTEGrate	●	–	–	–	–	–	–	–	–
:MEASure:ITEM:INTEGrate?	●	●	●	●	●	●	●	●	●
:MEASure:ITEM:LOADfactor	●	–	–	–	–	–	–	–	–
:MEASure:ITEM:LOADfactor?	●	●	●	●	●	●	●	●	●
:MEASure:ITEM:NORMal	●	–	–	–	–	–	–	–	–
:MEASure:ITEM:NORMal?	●	●	●	●	●	●	●	●	●
:MEASure:ITEM:SUM	●	–	–	–	–	–	–	–	–
:MEASure:ITEM:SUM?	●	●	●	●	●	●	●	●	●
:MEASure:ITEM?	●	●	●	●	●	●	●	●	●
:MEASure?	●	●	●	●	●	●	●	●	●
:MODE	●	–	–	–	–	–	–	–	–
:MODE?	●	●	●	●	●	●	●	●	●
:PEAKhold	●	–	●	●	–	●	●	–	●
:PEAKhold?	●	●	●	●	●	●	●	●	●
:PHF[ch]	●	–	–	–	–	–	–	–	–
:PHF[ch]?	●	●	●	●	●	●	●	●	●
:PRINt:FEED	●	●	●	–	–	–	●	●	●
:PRINt:HCOPy	●	●	●	–	–	–	●	●	●
:PRINt:HELP	●	●	●	–	–	–	●	●	●
:PRINt:MANual	●	●	●	–	–	–	●	●	●
:RESPonse	●	–	–	–	–	–	–	–	–
:RESPonse?	●	●	●	●	●	●	●	●	●
:RTC:COUNt	●	–	–	–	–	–	–	–	–
:RTC:COUNt?	●	●	●	●	●	●	●	●	●
:RS232c:ANSWer	●	●	●	●	●	●	●	●	●
:RS232c:ANSWer?	●	●	●	●	●	●	●	●	●
:RS232c:ERRor?	●	●	●	●	●	●	●	●	●
:RS232c:HANDshake	●	●	●	●	●	●	●	●	●
:RS232c:HANDshake?	●	●	●	●	●	●	●	●	●
:RS232c?	●	●	●	●	●	●	●	●	●

[ch]: channel no. / [No.]: number of items

Command \ Condition	Integration reset			Integration start			Integration stop		
	HOLD		PEAK	HOLD		PEAK	HOLD		PEAK
	ON	OFF		ON	OFF		ON	OFF	
:SCALe[ch]:CONTrol	●	—	—	—	—	—	—	—	—
:SCALe[ch]:CONTrol?	●	●	●	●	●	●	●	●	●
:SCALe[ch]:CT	●	—	—	—	—	—	—	—	—
:SCALe[ch]:CT?	●	●	●	●	●	●	●	●	●
:SCALe[ch]:PT	●	—	—	—	—	—	—	—	—
:SCALe[ch]:PT?	●	●	●	●	●	●	●	●	●
:SCALe[ch]:SC	●	—	—	—	—	—	—	—	—
:SCALe[ch]:SC?	●	●	●	●	●	●	●	●	●
:SCALe[ch]?	●	●	●	●	●	●	●	●	●
:STARt	●	●	●	—	—	—	●	●	●
:STOP	—	—	—	●	●	●	—	—	—
:STIMe:CONTrol	●	—	—	—	—	—	—	—	—
:STIMe:CONTrol?	●	●	●	●	●	●	●	●	●
:STIMe:STARTtime	●	—	—	—	—	—	—	—	—
:STIMe:STARTtime ?	●	●	●	●	●	●	●	●	●
:STIMe:STOPTime	●	—	—	—	—	—	—	—	—
:STIMe:STOPTime?	●	●	●	●	●	●	●	●	●
:STIMe?	●	●	●	●	●	●	●	●	●
:TIMER:CONTrol	●	—	—	—	—	—	—	—	—
:TIMER:CONTrol?	●	●	●	●	●	●	●	●	●
:TIMER:TIME	●	—	—	—	—	—	—	—	—
:TIMER:TIME?	●	●	●	●	●	●	●	●	●
:TIMER?	●	●	●	●	●	●	●	●	●
:TRANsmit:COLumn	●	●	●	●	●	●	●	●	●
:TRANsmit:COLumn?	●	●	●	●	●	●	●	●	●
:TRANsmit:SEParator	●	●	●	●	●	●	●	●	●
:TRANsmit:SEParator?	●	●	●	●	●	●	●	●	●
:TRANsmit:TERMinator	●	●	●	●	●	●	●	●	●
:TRANsmit:TERMinator?	●	●	●	●	●	●	●	●	●
:VOLTage[ch]:AUTO	●	—	—	—	—	—	—	—	—
:VOLTage[ch]:AUTO?	●	●	●	●	●	●	●	●	●
:VOLTage[ch]:MEAN	●	—	—	—	—	—	—	—	—
:VOLTage[ch]:MEAN ?	●	●	●	●	●	●	●	●	●
:VOLTage[ch]:RANGe	●	—	—	—	—	—	—	—	—
:VOLTage[ch]:RANGe?	●	●	●	●	●	●	●	●	●
:VOLTage[ch]?	●	●	●	●	●	●	●	●	●
:WAVEpeak[ch]	●	—	—	—	—	—	—	—	—
:WAVEpeak[ch]?	●	●	●	●	●	●	●	●	●

12.5.5 Execution Time of GP-IB Interface Command

Execution time
Displays the analysis and dealing time of long form command.
However for commands with parameter data, the time is that for the case determined by the data format specified by the data item, and for queries the time is that with headers enabled.

NOTE

- With the exception of the following, all this unit commands and queries are of the overlap type.

*OPC	*OPC?
*RST	*WAI
*TST?	*TRG
:STARt	:STOP
:INTEGrate:STARt	:INTEGrate:STOP
:INTEGrate:RESEt	:HOLD
:PEAKhold	

- When communicates with controller, it is necessary to add the data transfer time. However, the transfer time of GP-IB differs according to controller type.
  The transfer time of the data for RS-232C is as follows, when the data length is set to 8, parity is Even, stop bit is 1 (total number of the data is 10).

  9600 bit/second ---------- 960 character/second
  2400 bit/second ---------- 240 character/second

- Commands for setting needs some waiting time until stabilizing measurement after changing them.

Commands	Executing time
*RST	Within 1 s
:MEASure? (when 16 data)	Within 20 ms
:DEMAg? (for 1 channel)	Within 7 s
:MODE	Within 500 ms
:COUPling(ch) :CURRent(ch):RANGe :CURRent(ch):MEAN :EXTernal(ch):RANGe :FREQuency(ch):RANGe :LPF(ch) :PHF(ch) :RESPonse :VOLTage(ch):RANGe :VOLTage(ch):MEAN :WAVEpeak(ch)	Within 30 ms
*TST?	10 s
Commands other than in the table above	Within 20 ms

12.5.6 Initialization

The following table shows which items are initialized and which not, under various conditions.

Item \ Initialize method	Power on	*RST command	Device clear	*CLS command
GP-IB device address	—	—	—	—
RS-232C setting	—	—	—	—
Device specific functions (ranges etc.)	—	●	—	—
Output queue	●	—	●	—
Input buffer	●	—	●	—
Status byte register	●	—	— *1	● *2
Event registers	● *3	—	—	●
Enable registers	●	—	—	—
Current path	●	—	●	—
Headers on/off	●	●	—	—
Terminator for response messages	●	—	—	—
Separator for response messages	●	●	—	—

*1 Only the MAV bit (bit 4) is cleared.
*2 All bits except the MAV bit are cleared.
*3 Except the PON bit (bit 7).

12.5.7 Specific Command Tree

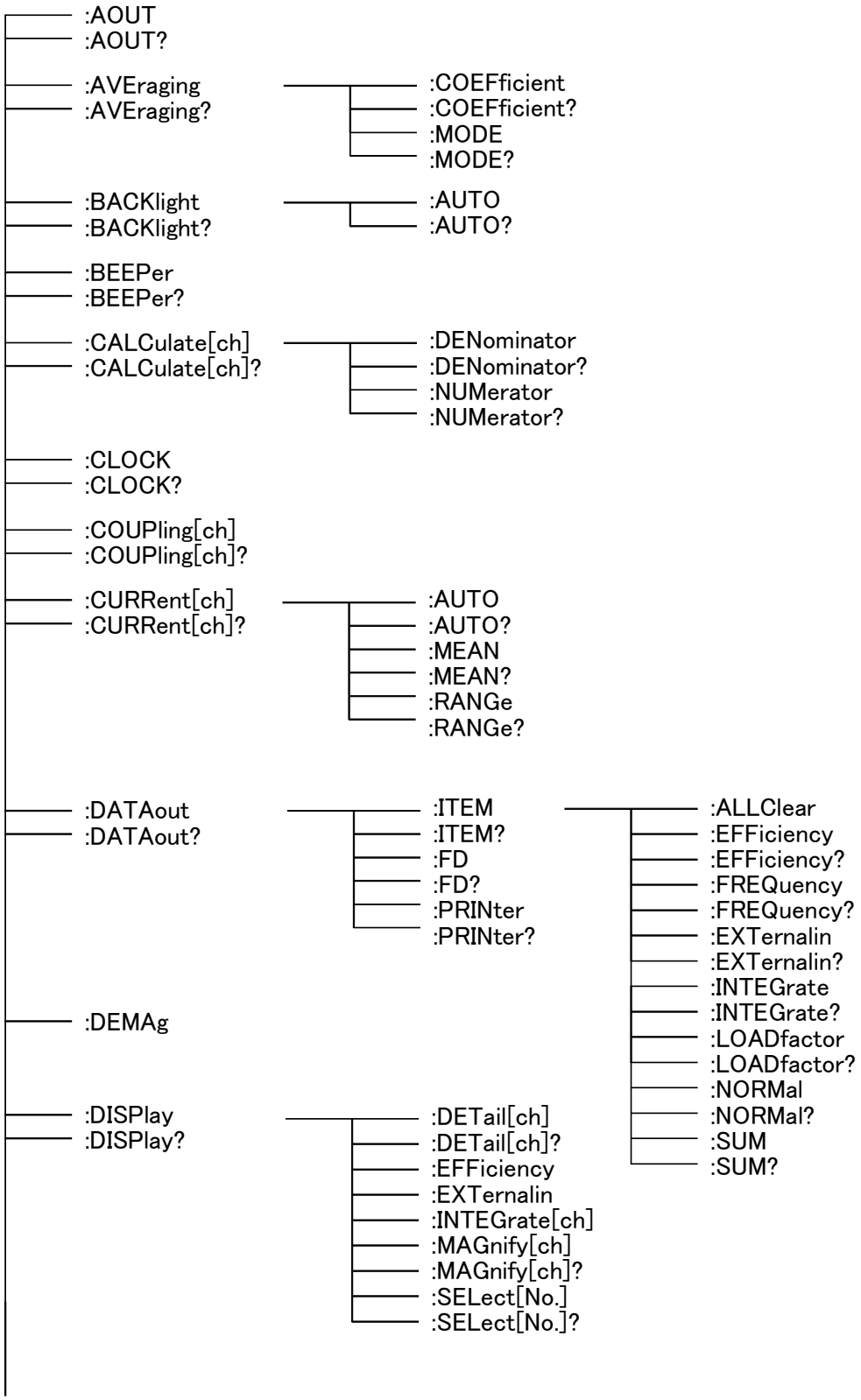

- :EXTernalin[ch]
- :EXTernalin[ch]?
  - :RANGe
  - :RANGe?
  - :SCALe
  - :SCALe?
  - :UNIT
  - :UNIT?
  - :PULSe
  - :PULSe?
- :FD
  - :MANual
- :FREQuency[ch]
- :FREQuency[ch]?
  - :AUTO
  - :AUTO?
  - :RANGe
  - :RANGe?
  - :SOURce
  - :SOURce?
- :HEADer
- :HEADer?
- :HOLD
- :HOLD?
- :INTEGrate
- :INTEGrate?
  - :RESEt
  - :STARt
  - :STOP
- :INTERval
- :INTERval?
  - :CONTrol
  - :CONTrol?
  - :TIME
  - :TIME?
- :KEYLock
- :KEYLock?
- :LANGuage
- :LANGuage?
- :LPF[ch]
- :LPF[ch]?
- :MATH
- :MATH?
- :MEASure
- :MEASure?
  - :ITEM
  - :ITEM?
    - :ALLClear
    - :EFFiciency
    - :EFFiciency?
    - :FREQuency
    - :FREQuency?
    - :EXTernalin
    - :EXTernalin?
    - :INTEGrate
    - :INTEGrate?
    - :LOADfactor
    - :LOADfactor?
    - :NORMal
    - :NORMal?
    - :SUM
    - :SUM?
- :MODE
- :MODE?
- :PEAKhold
- :PEAKhold?
- :PHF[ch]
- :PHF[ch]?
- :PRINt
  - :FEED
  - :HCOPy
  - :HELP
  - :MANual

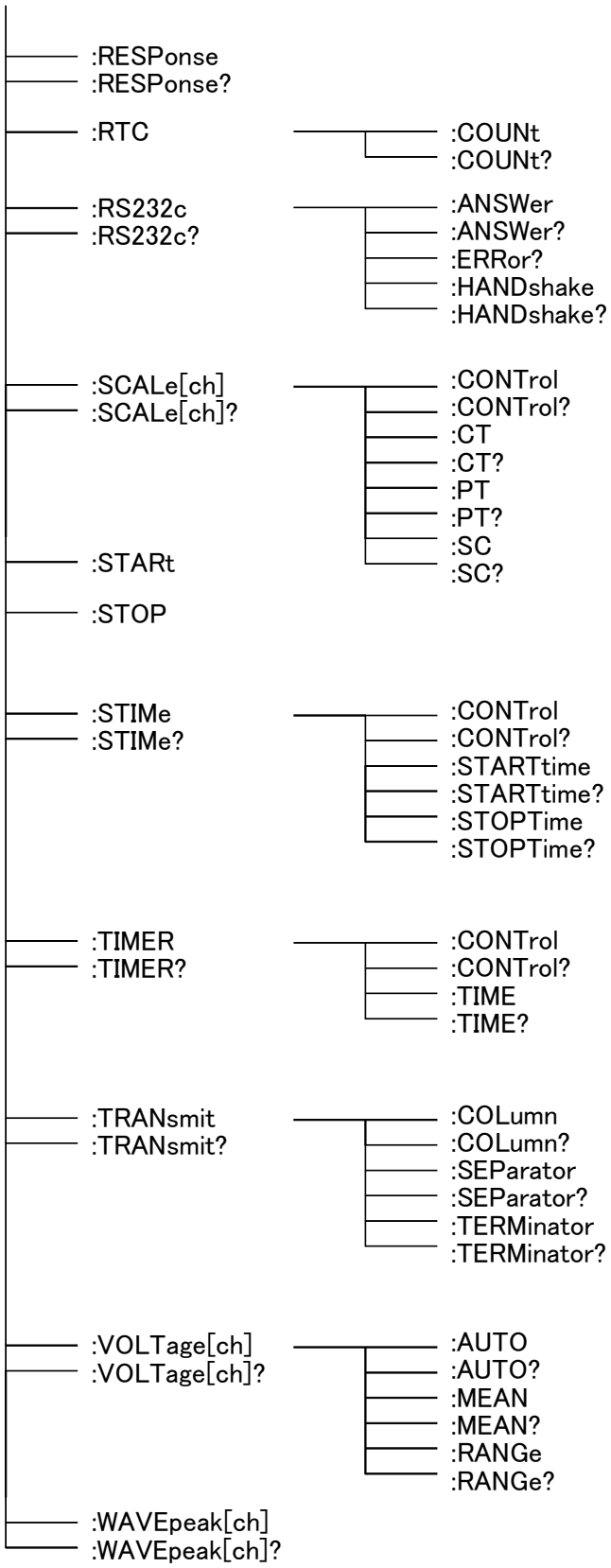
:RESPonse
:RESPonse?
:RTC
:COUNt
:COUNt?
:RS232c
:RS232c?
:ANSWer
:ANSWer?
:ERRor?
:HANDshake
:HANDshake?
:SCALe[ch]
:SCALe[ch]?
:CONTrol
:CONTrol?
:CT
:CT?
:PT
:PT?
:SC
:SC?
:STARt
:STOP
:STIMe
:STIMe?
:CONTrol
:CONTrol?
:STARTtime
:STARTtime?
:STOPTime
:STOPTime?
:TIMER
:TIMER?
:CONTrol
:CONTrol?
:TIME
:TIME?
:TRANsmit
:TRANsmit?
:COLumn
:COLumn?
:SEParator
:SEParator?
:TERMinator
:TERMinator?
:VOLTage[ch]
:VOLTage[ch]?
:AUTO
:AUTO?
:MEAN
:MEAN?
:RANGe
:RANGe?
:WAVEpeak[ch]
:WAVEpeak[ch]?

12.6 Sample Programs

As examples of interface, shows sample programs.
The contents of programs: Setting of range, scaling and rectifier type and displaying to get integrate elapsed time and integrate value at regular intervals (a minute at this point).
The sample programs of GP-IB and RS-232C are the same contents.
The sample programs of GP-IB are written in HP-BASIC (by Hewlett Packard) and of RS-232C are written in Quick BASIC (by Microsoft).

Setting condition

Voltage	150 V range	Rectifier type	RMS
Current	10 A range	Integration time	1 hour
PT ratio	3	Integration item	Active power
CT ratio	2	Data output interval	1 minute

12.6.1 GP-IB

Program list

```
10  DIM A$[100]
20  CLEAR 701
30  OUTPUT 701;"*RST"
40  OUTPUT 701;":TRAN:TERM 1"
50  OUTPUT 701;":VOLT1:RANG 150;AUTO OFF;MEAN OFF"
60  OUTPUT 701;":CURR1:RANG 10;AUTO OFF;MEAN OFF"
70  OUTPUT 701;":SCAL1:PT 3;CT 2;CONT ON,ON,OFF"
80  OUTPUT 701;":TIMER:TIME 1,0;CONTROL ON"
90  OUTPUT 701;":INTER:TIME 0,1,0;CONTROL ON"
100 OUTPUT 701;"*ESE 0;*ESE0 4;*SRE 0"
110 OUTPUT 701;":HEAD ON"
120 OUTPUT 701;"*CLS"
130 OUTPUT 701;":INTEG:START"
140 OUTPUT 701;"*STB?"
150 ENTER 701;A$
160 IF A$<>"*STB 1" THEN GOTO 140
170 OUTPUT 701;":MEAS? TIME,WP1,PWP1,MWP1"
180 ENTER 701;A$
190 PRINT A$
200 OUTPUT 701;":INTEG?"
210 ENTER 701;A$
220 IF A$=":INTEGRATE 0" THEN GOTO 250
230 OUTPUT 701;"*CLS"
240 GOTO 140
250 OUTPUT 701;":INTEG:RESET"
260 END
```

Program comments

10 Declare character arrays
20 Initialize the interface
30 Initialize
40 Set delimiter to "CR+LF"
50 Set ranges to 150 V
60 Set ranges to 10 A
70 Set PT ratio to 3, CT ratio to 2
80 Set timer
90 Set interval time
100 Set ESE, ESE0
110 Enable header
120 Clear event status registers
130 Start integration
140 Query contents of status byte
150 Get contents of status byte
160 Branches to line 140 when STB is not 1
170 Query integration value and time
180 Get integration value and time
190 Display integration value
200 Query integration condition
210 Get integration condition
220 Branches to line 250 when integration stops
230 Clear event status registers
240 Branches to line 140
250 Reset integration value
260 End of program

Execution results

```
TIME 00000,00,00;WP1 +0.00000kWh;PWP1 +0.00000kWh;MWP1 -0.00000kWh
TIME 00000,01,00;WP1 +0.06000kWh;PWP1 +0.06000kWh;MWP1 -0.00000kWh
TIME 00000,02,00;WP1 +0.12000kWh;PWP1 +0.12000kWh;MWP1 -0.00000kWh
TIME 00000,03,00;WP1 +0.18000kWh;PWP1 +0.18000kWh;MWP1 -0.00000kWh
TIME 00000,04,00;WP1 +0.24000kWh;PWP1 +0.24000kWh;MWP1 -0.00000kWh
TIME 00000,05,00;WP1 +0.30000kWh;PWP1 +0.30000kWh;MWP1 -0.00000kWh
TIME 00000,06,00;WP1 +0.36000kWh;PWP1 +0.36000kWh;MWP1 -0.00000kWh
```

```
TIME 00000,56,00;WP1 +3.36000kWh;PWP1 +3.36000kWh;MWP1 -0.00000kWh
TIME 00000,57,00;WP1 +3.42000kWh;PWP1 +3.42000kWh;MWP1 -0.00000kWh
TIME 00000,58,00;WP1 +3.48000kWh;PWP1 +3.48000kWh;MWP1 -0.00000kWh
TIME 00000,59,00;WP1 +3.54000kWh;PWP1 +3.54000kWh;MWP1 -0.00000kWh
TIME 00001,00,00;WPI +3.60000kWh;PWP1 +3.60000kWh;MWP1 -0.00000kWh
```

12.6.2 RS-232C

Program list

```
10  '
20  OPEN "COM1:9600,N,8,1,LF" FOR RANDOM AS #1
30  PRINT #1,"*RST"
40  PRINT #1,":TRAN:TERM 1"
50  PRINT #1,":VOLT1:RANG 150;AUTO OFF;MEAN OFF"
60  PRINT #1,":CURR1:RANG 10;AUTO OFF;MEAN OFF"
70  PRINT #1,":SCAL1:PT 3;CT 2;CONT ON,ON,OFF"
80  PRINT #1,":TIMER:TIME 1,0;CONTROL ON"
90  PRINT #1,":INTER:TIME 0,1,0;CONTROL ON"
100 PRINT #1,"*ESE 0;*ESE0 4;*SRE 0"
110 PRINT #1,":HEAD ON"
120 PRINT #1,"*CLS"
130 PRINT #1,":INTEG:START"
140 PRINT #1,"*STB?"
150 LINE INPUT #1,A$
160 IF INSTR(A$,"*STB 1")=0 THEN GOTO 140
170 PRINT #1,":MEAS? TIME,WP1,PWP1,MWP1"
180 LINE INPUT #1,A$
190 PRINT A$
200 PRINT #1,":INTEG?"
210 LINE INPUT #1,A$
220 IF INSTR(A$, ":INTEGRATE 0")<>0 THEN GOTO 250
230 PRINT #1,"*CLS"
240 GOTO 140
250 PRINT #1,":INTEG:RESET"
260 CLOSE #1
270 END
```

Program comments

10
20 Open the RS-232C circuit file
30 Initialize
40 Set delimiter to "CR+LF"
50 Set voltage range to 150 V
60 Set current range to 10 A
70 Set PT ratio to 3, CT ratio to 2
80 Set timer
90 Set interval time
100 Set ESE, ESE0
110 Enable header
120 Clear event status registers
130 Start integration
140 Query contents of status byte
150 Get contents of status byte
160 Branches to line 140 when STB is not 1
170 Query integration value and time
180 Get integration value and time
190 Display integration value
200 Query integration condition
210 Get integration condition
220 Branches to line 250 when integration stops
230 Clear event status registers
240 Branches to line 140
250 Reset integration value
260 Close the RS-232C circuit file
270 End of program

Execution results

```
TIME 00000,00,00;WP1 +0.00000kWh;PWP1 +0.00000kWh;MWP1 -0.00000kWh
TIME 00000,01,00;WP1 +0.06000kWh;PWP1 +0.06000kWh;MWP1 -0.00000kWh
TIME 00000,02,00;WP1 +0.12000kWh;PWP1 +0.12000kWh;MWP1 -0.00000kWh
TIME 00000,03,00;WP1 +0.18000kWh;PWP1 +0.18000kWh;MWP1 -0.00000kWh
TIME 00000,04,00;WP1 +0.24000kWh;PWP1 +0.24000kWh;MWP1 -0.00000kWh
TIME 00000,05,00;WP1 +0.30000kWh;PWP1 +0.30000kWh;MWP1 -0.00000kWh
TIME 00000,06,00;WP1 +0.36000kWh;PWP1 +0.36000kWh;MWP1 -0.00000kWh
```

```
TIME 00000,56,00;WP1 +3.36000kWh;PWP1 +3.36000kWh;MWP1 -0.00000kWh
TIME 00000,57,00;WP1 +3.42000kWh;PWP1 +3.42000kWh;MWP1 -0.00000kWh
TIME 00000,58,00;WP1 +3.48000kWh;PWP1 +3.48000kWh;MWP1 -0.00000kWh
TIME 00000,59,00;WP1 +3.54000kWh;PWP1 +3.54000kWh;MWP1 -0.00000kWh
TIME 00001,00,00;WPI +3.60000kWh;PWP1 +3.60000kWh;MWP1 -0.00000kWh
```

12.7 Device Compliance Statement

(1) IEEE 488.1 interface functions

These are detailed in Section 12.2.1, "GP-IB Interface."

(2) Operation with a device address other than 0 through 30

Address is unable to set other than 0 through 30.

(3) Timing of changed device address recognition

A change of address is recognized when moving to MEAS screen after changing address of interface on "SYSTEM" page on STATUS screen.

(4) Device settings at power on.

The status information is cleared, and all other items are preserved. However, the header on/off setting, and response message unit separator and terminator are all reinitialized.

(5) List of message exchange options

① Input buffer capacity and operation:
These are detailed in Section 12.3.9 "Input Buffer."

② Queries to which multiple response message units are returned:

:AVEraging?	2	:BACKlight?	2
:CALCulate(ch)	2	:CURRent(ch)	3
:DATAout:ITEM?	7	:DATAout?	9
:EXTernalin(ch)	4	:FREQuency(ch)	3
:INTERval?	2	:MEAS:ITEM?	7
:RS232c?	2	:SCALe(ch)	4
:STIMe?	3	:TIMER?	2
:VOLTage(ch)	3	:MEAS?	1 to 70

③ Queries producing responses as syntax checking is performed:
On this unit , all queries produce responses when syntax checking is performed.

④ Whether any queries produce responses when read:
There are no queries which produce response messages at the instant they are read in by the controller.

⑤ Whether any commands are coupled:
There are no relevant commands.

(6) Summary of functional elements for use when constructing device specific commands:

- Program message
- Program message terminator
- Program message unit
- Program message unit separator
- Command message unit
- Query message unit
- Command program header
- Query program header
- Program data
- Character program data
- Decimal program data
- Compound commands and program headers can be used.

(7) Buffer capacity limitations for block data

Block data is not used.

(8) Summary of program data elements used in expressions, and deepest nesting level allowable in sub-expressions, including syntax restrictions imposed by the device.

Sub-expressions are not used. Character data and decimal data are the only program data elements used.

(9) Response syntax for queries

Response syntax is detailed in "Command Reference".

(10) Transmission congestion relating to device-to-device messages which do not conform to the general principles for basic response messages

No messages which do not conform to the general principles

(11) Response capacity for block data

Block data does not appear in responses.

(12) Summary of standard commands and queries used

This appears in Section 12.5, "Command Summary."

(13) Device state after a calibration query has been completed without any problem

The *CAL? command is not used.

(14) Whether any *DDT commands are used:

The *DDT command is not used.

(15) Whether any macro commands are used:

Macros are not used.

(16) For queries related to identification, explanation of the response to the *IDN? query

This is detailed in "Command Reference".

(17) Capacity of the user data storage area reserved for when the *PUD command and the *PUD? query are being executed

The *PUD command and the *PUD? query are not used. Further, there is no user data storage area.

(18) Resources when the *RDT command and the *RDT? query are being used

The *RDT command and the *RDT? query are not used.

(19) Conditions which are influenced when *RST, *LRN?, *RCL?, and *SAV are used

*LRN?, *RCL?, and *SAV are not used. The *RST command returns this unit to its initial state. (Refer to "Standard Commands", and "Initialization").

(20) Scope of the self-testing executed as a result of the *TST? query

This is detailed in "Standard Commands".

(21) Additional organization of the status data used in a device status report

This is detailed in "Event Registers".

(22) Whether commands are overlap or sequential type

See Section 12.5.5.

(23) Criterion relating to the functions required at the instant that the termination message is produced, as a response to each command

Termination occurs when the command has been parsed. The *TRG command terminates the moment that measured data has been obtained.

12.8 Notes on Interface

12.8.1 GP-IB Troubleshooting

If the GP-IB appears to be malfunctioning, refer to the information below before calling for servicing.

Symptom	Cause / Treatment
The GP-IB has stopped working completely.	Are the cables properly connected?
	Is the device address for this unit set correctly?
	Does some other device have the same device address?
	Are all the devices powered on?
	Is the STATUS screen or the FDD screen on?
After transmission on the GP-IB bus, the keys on this unit freeze up and have no effect.	Press the LOCAL key on the front panel of this unit to release the remote state.
	Has a LLO (Local Lock-Out) command been transmitted? Transmit a GTL command to put this unit into the local state.
When attempting to read data using a HP-Basic ENTER statement, the GP-IB bus hangs.	Be sure to transmit one query before each Basic ENTER statement.
	Have any of these transmitted queries resulted in an error?
Although a command has been transmitted, nothing has happened.	Using the *ESR? query, inspect the standard event status register, and check what type of error has occurred.
Sending several queries, produces only one response.	Has an error occurred?
	Send the queries one at a time, and read the responses individually. When you want to read them in all at once, try doing so by putting them all on one line separated by the message separator character.
	Have you used the *IDN? query?
Sometimes service requests are not generated.	Have the service request enable register and the various event status enable registers been correctly set?
	Clear all the event registers at the end of SRQ processing subroutines by using the *CLS command. If an event bit is not cleared, no service request will be generated for that event.
The response message to a query differs from the display on the front panel of this unit.	Due to the response message being produced at the instant that this unit receives the query, there is a possibility that it may not agree with the display at the instant that the controller reads it in.

12.8.2 RS-232C Troubleshooting

Symptom	Cause / Treatment
The RS-232C has stopped working completely.	Are the cables properly connected?
	Are all the devices powered on?
	Are the cables properly connected?
	Is the STATUS screen or the FDD screen on?
Transmission on the RS-232C is not taking place properly.	Is the controller message terminator set correctly? (TRAN:TERM command) (Refer to "Message Terminators")
	Is RS-232C (band rate, data length, parity, stop bits) set the same?
After transmission on the RS-232C, the keys on this unit freeze up and have no effect.	Press the LOCAL key on the front panel of this unit to release the remote state.
When attempting to read data using a Basic INPUT statement, the RS-232C hangs.	Be sure to transmit one query before each Basic INPUT statement.
	Have any of these transmitted queries resulted in an error?
Although a command has been transmitted, nothing has happened.	Using the *ESR? query, inspect the standard event status register, and check what type of error has occurred.
Sending several queries, produces only one response.	Has an error occurred?
	Send the queries one at a time, and read the responses individually. When you want to read them in all at once, try doing so by putting them all on one line separated by the message separator character.
	Have you used the *IDN? query?
The response message to a query differs from the display on the front panel of this unit.	Due to the response message being produced at the instant that this unit receives the query, there is a possibility that it may not agree with the display at the instant that the controller reads it in.

Chapter 13
Using the Printer (Option)

13.1 Overview

This unit can be used with internal thermal printer as option. The measured data and setting data can be easily printed out.

⚠ **CAUTION**

- Using the printer in a high-temperature or high-humidity environment should be avoided at all costs. This can seriously reduce the printer life.
- For long-term storage, ensure that the recording head is in the up position. Otherwise the rollers can be deformed, leading to uneven printing.
- The printer is a thermal printer. The recording paper has characteristics finely tuned for use with the printer. Using recording paper of a different specification may not only result in impaired printing quality, but even prevent the printer from operating. Always use the HIOKI specified product.
- Color printing is not possible.
- The printing is not affected by the English/Japanese setting for the display.
- Store the thermal paper at not more than 40℃ and 90%RH. If light reaches the paper over a long period, the paper will discolor. Do not unwrap rolls of paper until you are ready to use them.
- To keep definitive data, make photocopies of the recordings.
- If the thermal paper absorbs an organic solvent such as alcohols or ketones, it may no longer develop properly, and recorded information may fade. Soft PVC film and transparent contact adhesive tape contain such solvents, so avoid using them with recordings.
- Avoid interleaving the thermal recordings with damp diazo copies.
- The amount of recording possible on a new roll of paper (10 m) depends on the coupling mode, the automatic output, and other conditions. For long-term output under the same conditions, calculate the length required by carrying out a test printing.

13.2 Specifications

Printing method	Thermosensitive line dot-matrix
Printing digits	33 digits/line
Printing speed	8 lines/s
Printing width	72 mm
Recording paper	Black thermosensitive recording paper Width: 74 mm×10 m Core inner diameter: 12 mm Maximum outer diameter: 33 mm End of paper: Red marking for 0.5 m
Functions	Measurement item printing Screen hard copy Unit configuration printing (HELP) Auto-print by time controls (interval time, timer, real-time control) Printing by external control signal Printing synchronized to integration Printing stop triggered by paper out or head up detection Printing time of a power failure, and time power restored Starting printing after recovery from a power failure

13.3 Operating Procedure

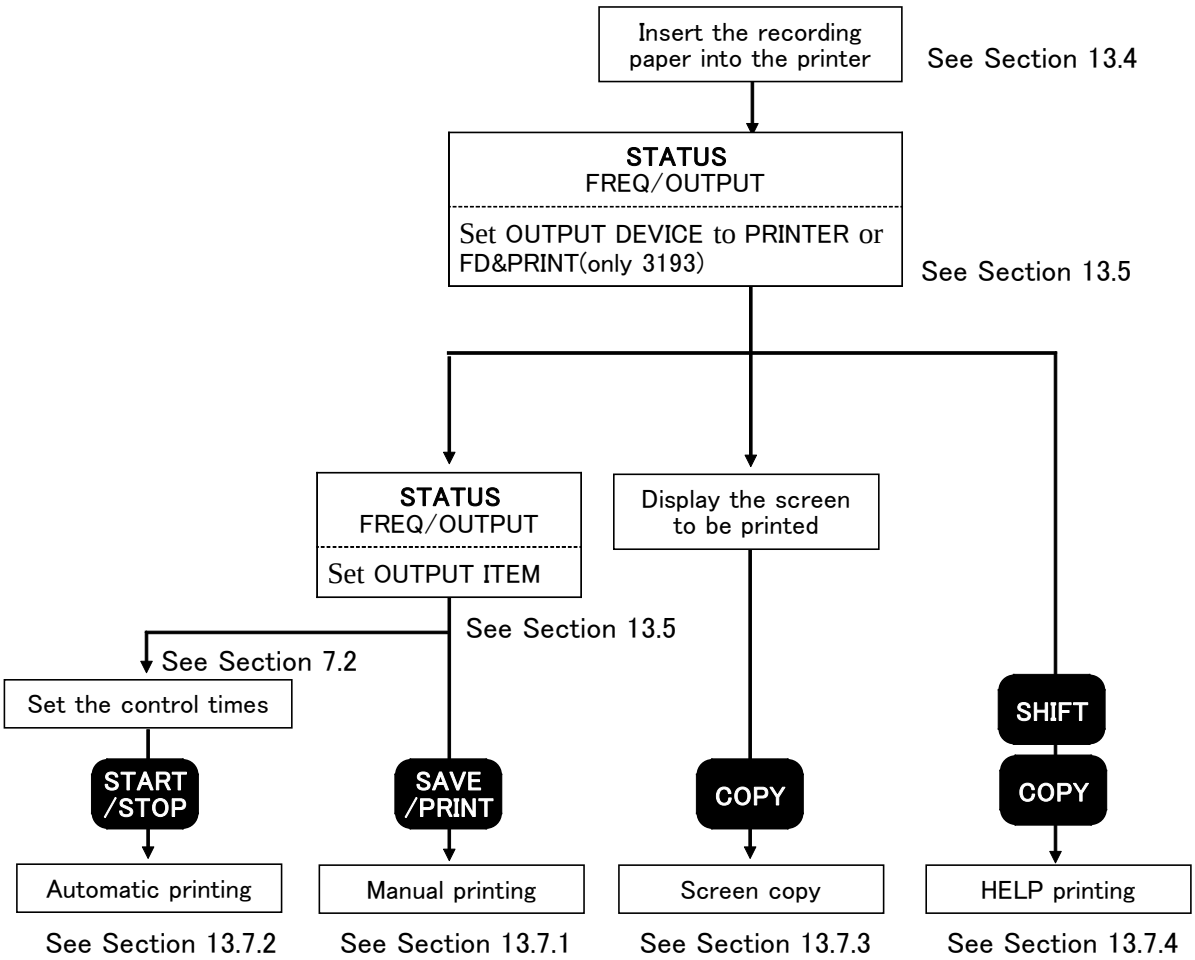

Printer output indication

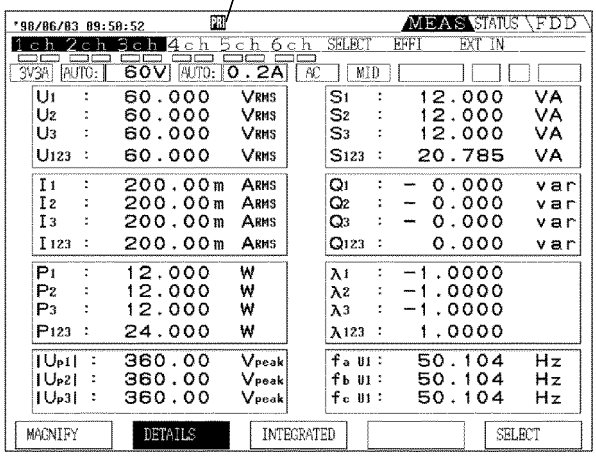

13

13.4 Loading Recording Paper

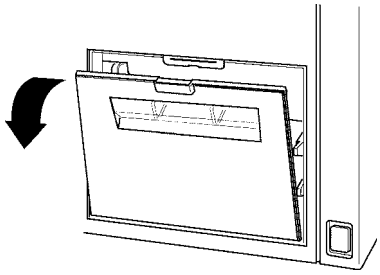

1. Open the printer cover.

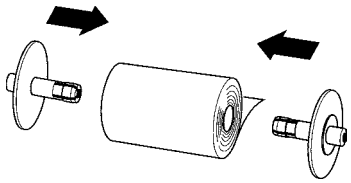

2. Insert the attachment into the roll of recoding paper.

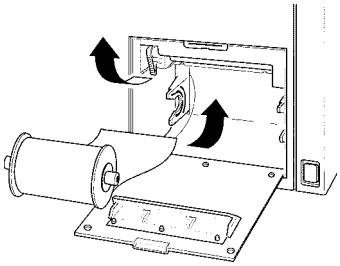

3. Put down the head up/down lever.

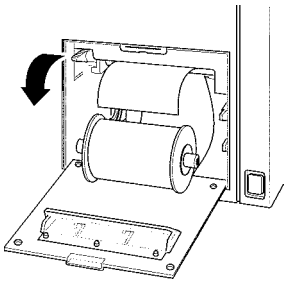

4. Insert the end of the recording paper and pull it out to the other side.
   Raise the head up/down lever.

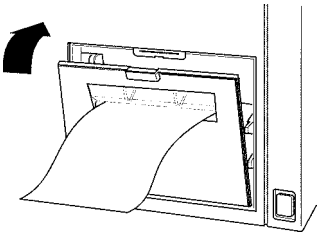

5. Close the printer cover and pull the paper to the outside through the printer exit slot.

13.5 Switching the FDD/Printer (Only 3193)

The 3193 has a built-in floppy disk drive (FDD). A printer option is also available. Both of these can be used for data output as required.
Output can also be controlled by the various time functions.

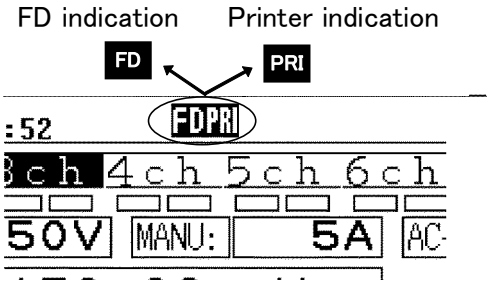

NOTE

- For details on using the floppy disk, see Chapter 11, "Using the Floppy Disk Drive".
- For details on using the printer, see Chapter 13, "Using the Printer".

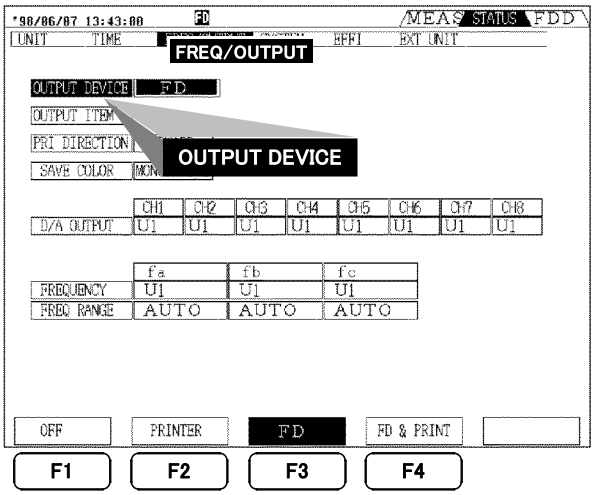

■ Selecting the output destination

1. Press the **STATUS** key, then use the **PAGE** (◀▶) keys to display the "FREQ/OUTPUT" page.
2. Using the **CURSOR** keys, move the cursor to the "OUTPUT DEVICE" item.
3. Select from F1 (OFF), F2 (PRINTER), F3 (FD), F4 (FD&PRINT).

NOTE

When "FD&PRINT" is selected, after outputting to the printer, the same data is written to the floppy disk.

13

13.6 Setting the Measurement Items to Print

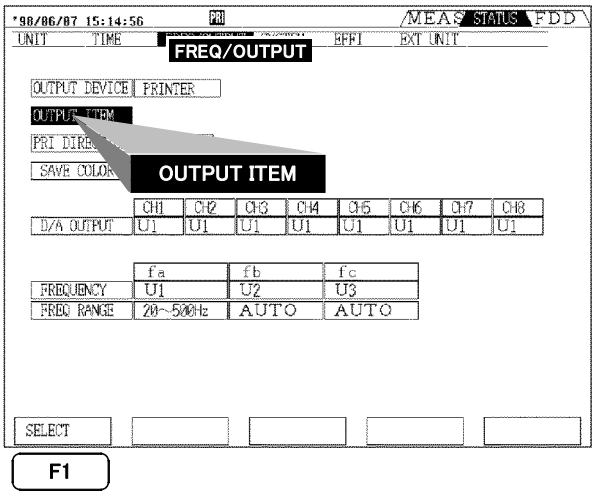

1. Press the **STATUS** key and then use the **PAGE** key to display the "FREQ/OUTPUT" page.
2. Using the **CURSOR** keys, move the cursor to the "OUTPUT ITEM" item.
3. Press function key F1 (SELECT), to display the screen for output item selection. In this screen, "ON" indicates the selected items, and items not marked are not saved.

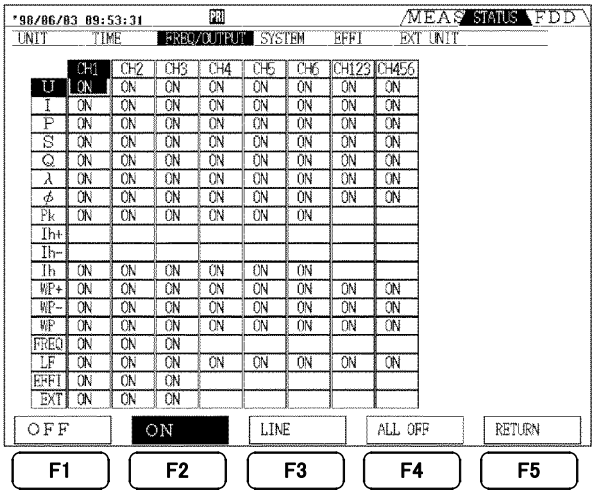

4. Move the cursor to the item to be saved.
5. Press the F2 (ON) key to make a setting.
   To delete the item which has been set, press F1 (OFF) key.
6. Pressing the F3 (LINE) key sets the items on the specified line to on or off.
7. When the settings are completed, press the F5 (RETURN) key.

NOTE

The items to be printed out are same as FDD.
For the setting of measurement data in Harmonic /Flicker analysis function, see the 9605 Instruction manual.
Each item of a channel corresponds to an efficiency or 9603 data as shown below.
EFFI/CH1: efficiency η 1
EFFI/CH2: efficiency η 2
EFFI/CH3: efficiency η 3
EXT /CH1: 9603 CHA
EXT /CH2: 9603 CHB
EXT /CH3: 9603 PM(This cannot be set unless the motor power is calculated.)

13.7 Printing Out

Whatever method the printout is started by, after the printout no paper feed occurs. If, therefore, outputting to the paper cutter, it is necessary to feed the paper. After the printout, hold down the **SHIFT** key and press the **SAVE/PRINT** key(*) to feed the last line of printing to the paper cutter.

13.7.1 Manual Printing

```
MANUAL.        '98-05-17 17:06:49

CH1  :  1P2W
  U1    :   6.0000 Vrms
  I1    :   2.0000 Arms
  P1    :   12.000 W
  PF1   :   1.0000
  PEAK1 :   36.000 Vpeak

WP1  :
  INTERVAL (+):    0.00000 Wh
           (-):  - 0.00000 Wh
              :    0.00000 Wh
  INTEGRATE(+):    0.00000 Wh
           (-):  - 0.00000 Wh
              :    0.00000 Wh
```

The data can be printed out at any time by pressing the **SAVE/PRINT** key(*).
To stop printing, press the **SHIFT** key and **SAVE/PRINT** key(*) again.

NOTE

During automatic output, the **SAVE/PRINT** key(*) is invalid.

(*: SAVE/PRINT key is the PRINT key in the HIOKI 3193-10)

13.7.2 Automatic Printing by Time Settings

```
START.         '98-05-17 17:07:24
00000:00:00

CH1  :  1P2W
  U1    :   6.0000 Vrms
  I1    :   2.0000 Arms
  P1    :   12.000 W
  PF1   :   1.0000
  PEAK1 :   36.000 Vpeak

WP1  :
  INTERVAL (+):    0.00000 Wh
           (-):  - 0.00000 Wh
              :    0.00000 Wh
  INTEGRATE(+):    0.00005 Wh
           (-):  - 0.00000 Wh
              :    0.00005 Wh

               '98-05-17 17:07:54
00000:00:30

CH1  :  1P2W
  U1    :   6.0000 Vrms
  I1    :   2.0000 Arms
  P1    :   12.000 W
  PF1   :   1.0000
  PEAK1 :   36.000 Vpeak

WP1  :
  INTERVAL (+):    0.10005 Wh
           (-):  - 0.00000 Wh
              :    0.10005 Wh
  INTEGRATE(+):    0.10005 Wh
           (-):  - 0.00000 Wh
              :    0.10005 Wh

END.           '98-05-17 17:08:24
00000:01:00
```

By combination with the interval, timer, or real-time control time, automatic printing is possible.

1. Set the item to print out.
2. On the "TIME" page on STATUS screen, set the time and return to the MEAS screen.
3. Press the **START/STOP** key to start printing according to the time setting.
4. To stop printing, press **START/STOP** key again.

13

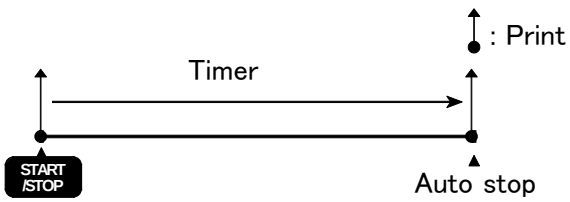

① Timer

Printing occurs when **START/STOP** key is pressed and then stops automatically.

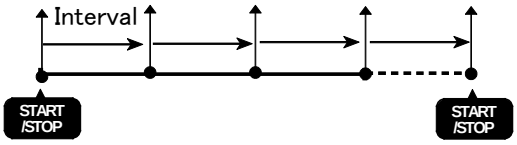

② Interval time

Printing occurs when the **START/STOP** key is pressed, for each interval elapsed, and then stops when the **START/STOP** key is pressed or 10000 hours elapsed.

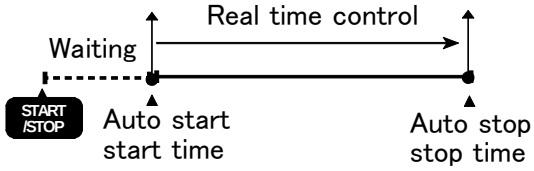

③ Real time control

"stand-by" is displayed until start time is reached and printing occurs automatically at the start time and stop time, and then stops automatically.

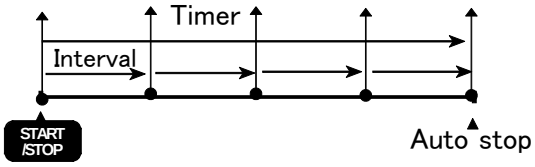

④ Timer + Interval time

Printing occurs when the **START/STOP** key is pressed, for each interval elapsed, and then stops automatically.
For integration, the integration values for each interval are printed, and then the total values at the stop time.

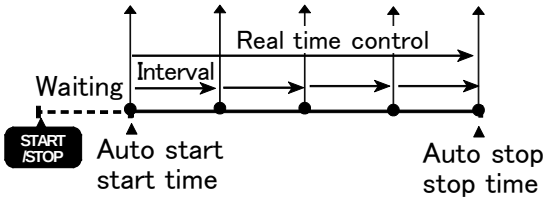

⑤ Real time control + interval time

Printing occurs at the start time, for each interval elapsed, and at the stop time, then stops.
For integration, the integration values for each interval are printed, and then the total values at the stop time.

NOTE

- If the panel **SAVE/PRINT** key is pressed, then manual printing is carried out, and the automatic printing does not start.
- During automatic output by each time control, the **SAVE/PRINT** key is invalid.
- If the timer end timing does not coincide with the interval timer timing, then the unit stops with the timer end timing, and the last interval timing is ignored.
- If the real-time control end timing does not coincide with the interval timer timing, then the unit stops with the real-time control end timing, and the last interval timing is ignored.
- When combined with time averaging or integration, during operation it is not possible to change the settings, and the setting data is therefore saved at the start time only.
- When combined with integration or time averaging, the operations are synchronized.
- When controlled by the **START/STOP** key, integration always operates. Therefore, if after repeated start/stop operations the total time reaches 10,000 hours, the **START/STOP** key is no longer accepted.

13.7.3 Screen Hard Copy

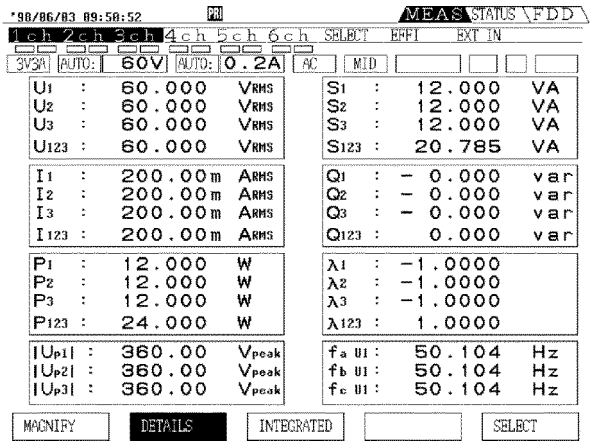

By pressing the panel **COPY** key, a copy of the screen display can be printed.

NOTE

- During automatic output to the printer or floppy disk drive, the **COPY** key is invalid.
- The printout is a reduced copy of the screen image, and therefore depending on character sizes and other factors, parts may be hard to read.

13.7.4 Help Printing Mode

```
HELP.          '98-05-17 17:15:54
HIOKI   3193    Ver1.00

HOLD          : OFF
MATH          : TYPE1
AVERAGING     : OFF
RESPONSE      : MID
FREQUENCY     :
           fa :  AUTO (U1)
           fb :  AUTO (U2)
           fc :  AUTO (U3)
INTERFACE     : GP-IB
  ADDRESS     :  1
D/A OUT       :
 ch1:U1      ch2:U1      ch3:U1
 ch4:U1      ch5:U1      ch6:U1
 ch7:U1      ch8:U1
WAVE PEAK     :
 ch1:Upeak   ch2:Upeak   ch3:Upeak
 ch4:Upeak   ch5:Upeak   ch6:Upeak
EFFICIENCY    :
            P1 +    +    +
  EFFI1 : ---------------------
            P1 +    +    +

            P1 +    +    +
  EFFI2 : ---------------------
            P1 +    +    +

            P1 +    +    +
  EFFI3 : ---------------------
            P1 +    +    +
TIMER    TIME: OFF
INTERVAL TIME: OFF
REAL TIME CONTROL: OFF
CH1   :
     MODE     : 1P2W
     COUPLING: AC
     U-RANGE :  60 Vrms (AUTO)
     I-RANGE :   2 Arms (AUTO)
     SC       : OFF
     PT       : OFF
     CT       : OFF
     LPF      : OFF
     PHF      : OFF
```

The settings for the unit can be printed out by pressing the **SHIFT** key and **COPY** key.

NOTE

- During automatic output to the printer or floppy disk drive, this mode is invalid.
- When a CT6862 is identified on a channel, regardless of any CT ratio setting, one of the internal ranges selected from 0.5 A, 1 A, 2 A, 5 A, 10 A or 20 A will be printed out for the channel by the help printing mode.

13.7.5 External Control Printing

Using the external control connector on the rear panel of the 3193, a printout can be started by external control. For timing and other details, see Section 9.3.2, "FDD/PRINTER. START Terminal."

NOTE

During automatic output to the printer or floppy disk drive, the external control is invalid. The screen hard copy is not possible.

13.8 Setting the Printing Direction

You can select the printing direction.

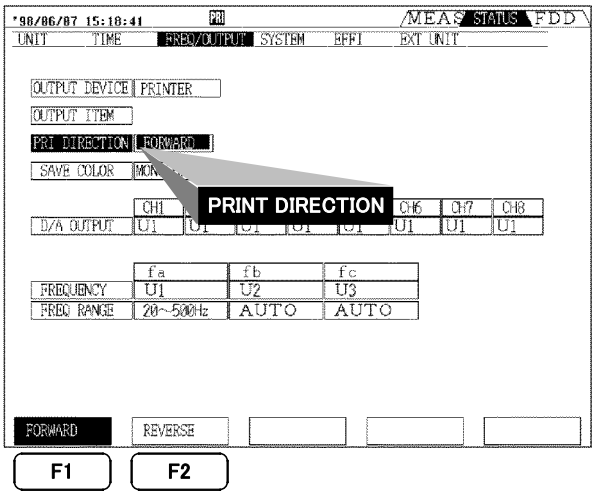

1. Press the **STATUS** key and then use the **PAGE** key to display the "FREQ/OUTPUT" page.
2. Using the **CURSOR** keys, move the cursor to the "PRINT DIRECTION" item, and press F1 (Forward) or F2 (Reverse).

Printing direction
↓

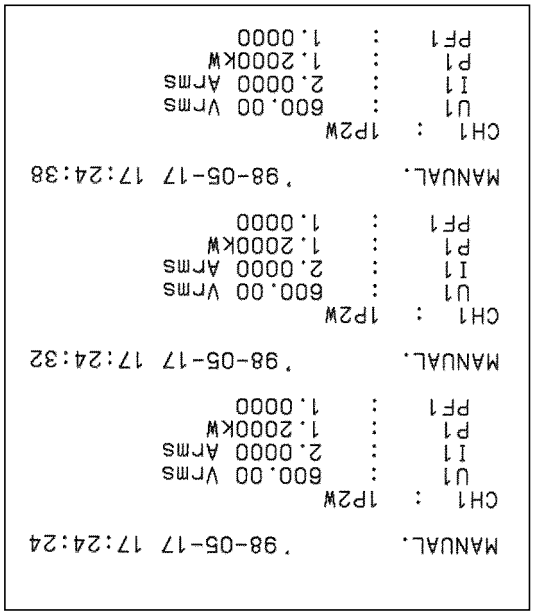

Forward

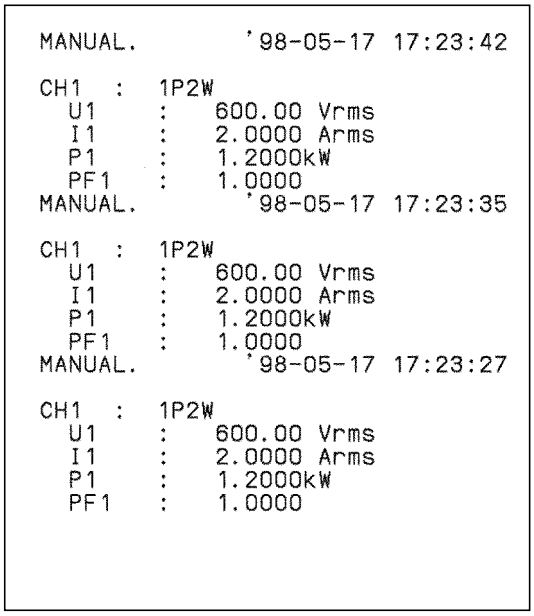

Reverse

13.9 Error and Overflow Displays

Error displays

When an error occurs, PRI is displayed in red.

Error display	Meaning
"No paper loaded"	Attempt to print when no paper loaded.
"Printer head up"	Printer head is up.
"Printer: head is up."	Outside temperature range of specification.
"Printer: motor drive voltage error."	A fault has occurred.

Overflow displays

The following table shows the relationship among the display indications and printed forms for measurement overflow and so on.

Overflow display	Print example	Meaning
o.r	o.r	Measurement out of range
-----	-----	Calculation out of range
-----	-----	During frequency auto range operation
Value in red	>100.00	Out of range during time averaging
Value in red	>10.00000	Out of range during integration

Chapter 14
9600 AC/DC DIRECT INPUT UNIT (Option)

14.1 Overview

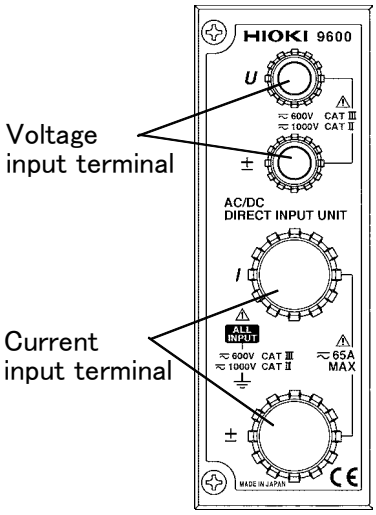

The 9600 AC/DC direct connection input unit enables power measurement over a wide frequency range, including DC, and from 0.5 Hz to 1 MHz.
It also has wide measurement ranges: from 6 V to 1000 V and from 0.2 A to 50 A.

⚠ DANGER

Do not exceed the maximum input voltage and current. Doing so can damage the unit or cause a serious accident.

⚠ WARNING

Be sure to connect the voltage input terminals, current input terminals correctly. Measurement which is attempted with the wiring connected incorrectly may cause damage to the unit or a short-circuit.

⚠ CAUTION

When the power of the 3193 is turned off, do not apply voltage or current to the voltage input terminal or current input terminal. Doing so may damage the unit.

14.2 Notes on Use

- The 9600 is a factory-fitted option. It therefore requires the 3193 unit for calibration or repair.
- For accurate measurement, allow one hour for warming up before use.
- It may not be possible to obtain accurate measurements close to a transformer or conductor carrying a large high-frequency current, or close to any device such as a radio transmitter generating a strong magnetic field.
- The 9600 uses the DC-CT method for measuring current, and therefore after measuring a large current, there may be a very small residual offset voltage. The offset voltage produces the largest error effect in the minimum ranges; in this case, shut off the current input, and carry out degaussing (DMAG).
- The 9600 active power measurement unit operates with an auto-zero circuit at 2.442 kHz. For this reason, an input signal with a frequency of 2.442 kHz will result in a periodically fluctuating display indication.
- When measuring a high frequency voltage to earth (for example the secondary side of an inverter), errors may occur in the measurement values.
- Limits are specified for the range in which voltage and current level accuracies are guaranteed, depending on the input frequency.
- The guaranteed accuracy ranges of frequency depend on the response, coupling mode, and low-pass filter settings.
- Depending on the response setting, display may not stabilize during measurement of low frequencies. If this occurs, use averaging.

14.3 Specifications (using with the 3193)

		Voltage (*U*)	Current (*I*)		Active power (*P*)	
Input type		Resistor voltage divider + isolation amplifier, for isolated input	Isolated input, using DC-CT method		————	
Measurement type		Analog processing: ・True effective value measurement ・Mean value rectification effective value measurement ・DC measurement	Analog processing: ・True effective value measurement ・Mean value rectification effective value measurement ・DC measurement		Analog processing: Active power measurement	
Input resistance		2 MΩ±100 kΩ(±5%)	1 mΩ or less		————	
Measurement range		6.0000/15.000/30.000 60.000/150.00/300.00 600.00 V /1.0000 kV	200.00/500.00 mA 1.0000/2.0000/5.0000 10.000/20.000/50.000 A		Depending on combination of voltage and current values.	
Effective input range		5% to 110% (up to 100% for 1 kV range) or within the range accuracy assurance range for the signal frequency specified elsewhere Display range: 0.2% to 130% (AC/AC+DC, 200 mA range), 0.2% to 130% (others), 0.3% to 130% (1000 V range)				
Maximum input voltage Maximum input current (55 Hz)		1000 Vrms 1500 Vpeak value	65 Arms 100 Apeak max.		————	
Crest factor		(Measurement range×6) / measurement value or Maximum input peak value/ measurement value			————	
Accuracy (Note 1) 23℃±5℃ (73°F±9°F) 80%RH max. Power factor=1 1 hour warm-up Input sine wave Voltage to earth 0 V Guaranteed accuracy period: six months After degaussing	DC	±0.1% rdg.±0.2%f.s.	±0.1% rdg.±0.2%f.s.		±0.1% rdg.±0.2%f.s.	
	0.5 – 1 Hz	±0.5% rdg.±0.5%f.s	±0.5% rdg.±0.5%f.s.		±0.5% rdg.±0.5%f.s.	
	1 – 10 Hz	±0.2% rdg.±0.2%f.s.	±0.2% rdg.±0.2%f.s.		±0.2% rdg.±0.2%f.s.	
	10 – 45 Hz	±0.1% rdg.±0.2%f.s.	±0.1% rdg.±0.2%f.s.		±0.1% rdg.±0.2%f.s.	
	45 – 66 Hz	±0.1% rdg.±0.1%f.s.	±0.1% rdg.±0.1%f.s.		±0.1% rdg.±0.1%f.s.	
	66 Hz – 10 kHz	±0.1% rdg.±0.2%f.s.	±0.1% rdg.±0.2%f.s.		±0.1% rdg.±0.2%f.s.	
	10 k – 50 kHz	±0.3% rdg.±0.3%f.s	±0.3% rdg.±0.3%f.s.		±0.3% rdg.±0.3%f.s.	
	50 k – 100 kHz	±0.5% rdg.±0.5%f.s.	5 A or less	5 A or more	5 A or less	5 A or more
			±0.5% rdg. ±0.5%f.s.	±2.5%f.s.	±0.5% rdg. ±0.5%f.s.	±5%f.s.
	100 k – 300 kHz	±0.5% rdg.±0.5%f.s.	±0.5% rdg. ±0.5%f.s.	±5.0%f.s.	±1.0% rdg. ±1.5%f.s.	±10%f.s.
	300 k – 400 kHz	±1.5% rdg.±0.5%f.s.	±2.0% rdg. ±0.5%f.s.	——	±2.0% rdg. ±1.5%f.s.	——
	400 k – 500 kHz	±2.0% rdg.±1.0%f.s.	±2.0% rdg. ±1.0%f.s.		±2.0% rdg. ±2.5%f.s.	
	500 k – 700 kHz	±10.0%f.s.	±10.0%f.s.		±15.0%f.s.	
	700 k – 1 MHz	±15.0%f.s.	±15.0%f.s.		±30%f.s.	

14

	Voltage (*U*)	Current (*I*)	Active power (*P*)
Note 1: There are limited ranges for the levels at which the accuracy is specified, depending on the input signal frequency. Note 2: The accuracy specified range varies depending on switching response, coupling mode, and LPF. See each column on the next page. Note 3: When a voltage more than 600 V, 2 kHz is input, 0.2%f.s. is added to the accuracy more than 2 kHz in 0.2 A range. Note 4: Depending on the response, the display may be not stable at low frequency measurement. In this case, carry out averaging.			
Power factor influence (55Hz)	———————	———————	±0.15%f.s. (power factor=0)
Effect of magnetization (after input 100 ADC)	———————	±20 mA max.	
Accuracy of waveform peak measurement (when continuous input sine wave)	±1%f.s. (at 0.5 Hz to 1 kHz) ±2%f.s. (at 1 kHz to 10 kHz) ±10%f.s. (at 10 kHz to 100 kHz) Effective input range: rms value of sine wave is in the effective input range.		
Response (analog output response time)	FAST (0.1 s): Specification is met for DC and 50 Hz and above. MID (0.8 s): Specification is met for DC and 10 Hz and above. SLOW (5.0 s): Specification is met for DC and 0.5 Hz and above. The analog output response time is the time such that for an input change from 0% to 90% and 100% to 10% of the nominal range value, the value is within ±1% of the final stabilized value.		
Coupling mode switching	AC mode (Specification is met for 10 Hz and above.) AC+DC mode DC mode (Specification is met for only DC.)		
LPF switching	OFF/500 Hz/5 kHz/300 kHz (-3dB) The accuracy specification is met as follows 500 Hz: 60 Hz or less, 5 kHz: 100 Hz or less, 300 kHz: 50 kHz		
phF switching	OFF/200 Hz (Stabilization filter for *U* and *I* polarity determination.) There is no effect on the *U*, *I*, or *P* accuracy.		
Temperature coefficient (0–18, 28–40℃)	±0.03%f.s./℃ or less		
Analog output (*U*/*I*/*P*) (When input DC, sine wave, range full scale)	±5 V DC f.s. (1000 V range: DC±3.333 V f.s.) Display accuracy: ±0.2%f.s		
Monitor output (*U*/*I*) (When input DC, sine wave, range full scale)	1 Vrms f.s. (1000 V range: 0.667 Vrms f.s.) Display accuracy (100 kHz or less): ±0.2%f.s (100 kHz to 1 MHz): ±3dB		
Maximum rated voltage to earth	1000 V		
Influence of maximum rated voltage to earth (1000 Vrms, at 50/60 Hz)	±0.05%f.s. max (When applying between input terminals and case)		
Dielectric strength (50/60 Hz)	5.55 kV AC (1 mA) for 1 minute Between *U*/*I* input terminals and case, between *U*/*I* input terminals and power plug		
Insulation resistance	When using with the 3193 100 MΩ or more at 500 V DC Between *U*/*I* input terminals and case, between *U*/*I* input terminals and power plug		

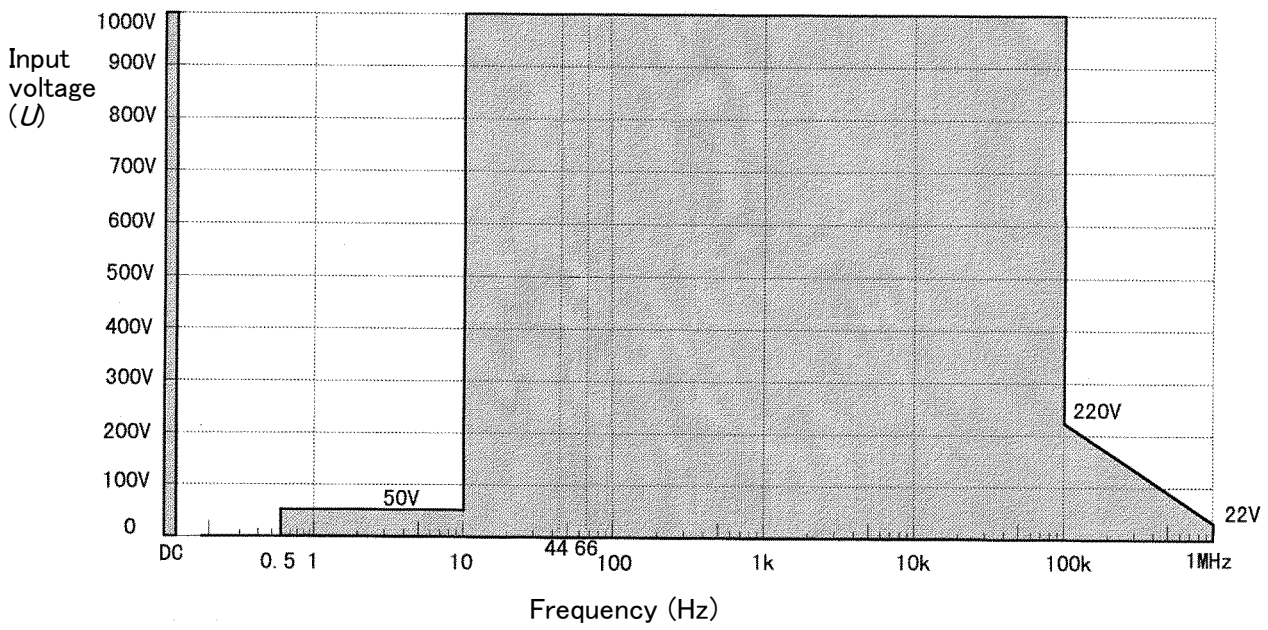

9600 Voltage Accuracy Assurance Range

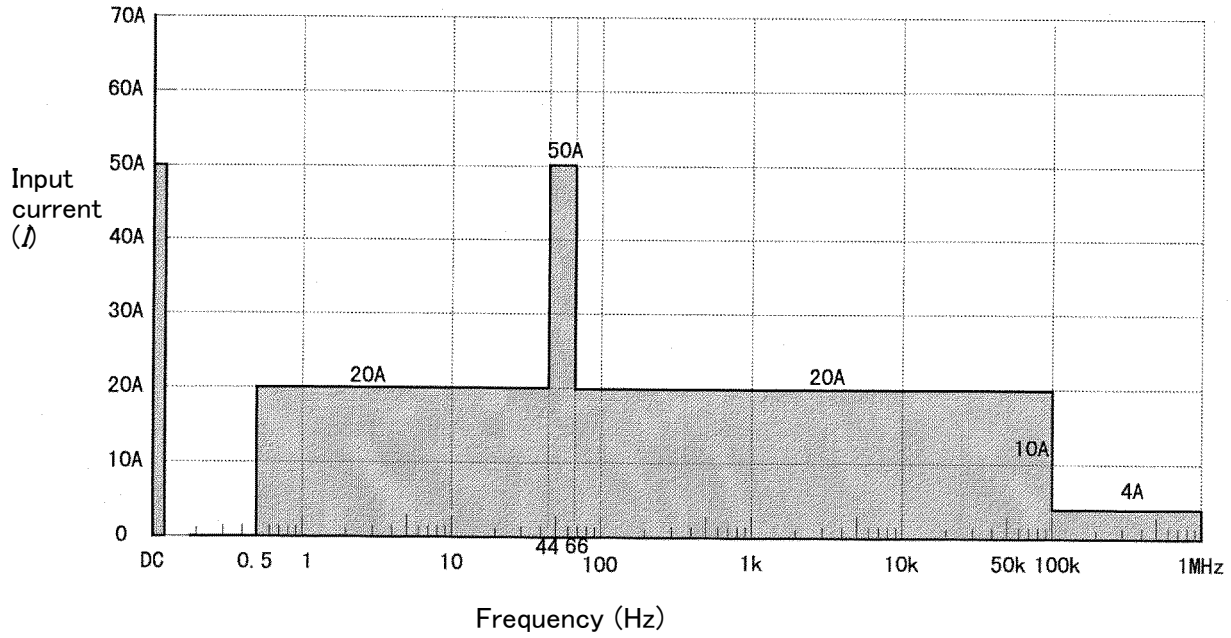

9600 Current Accuracy Assurance Range

14.4 Internal Block Diagram

The voltage value is converted by attenuator and range circuits to a voltage signal waveform proportional to the measured voltage, then isolated by an isolating amplifier.
The current input is isolated in a DC-CT, and converted in a range circuit to a voltage signal waveform proportional to the measurement current.

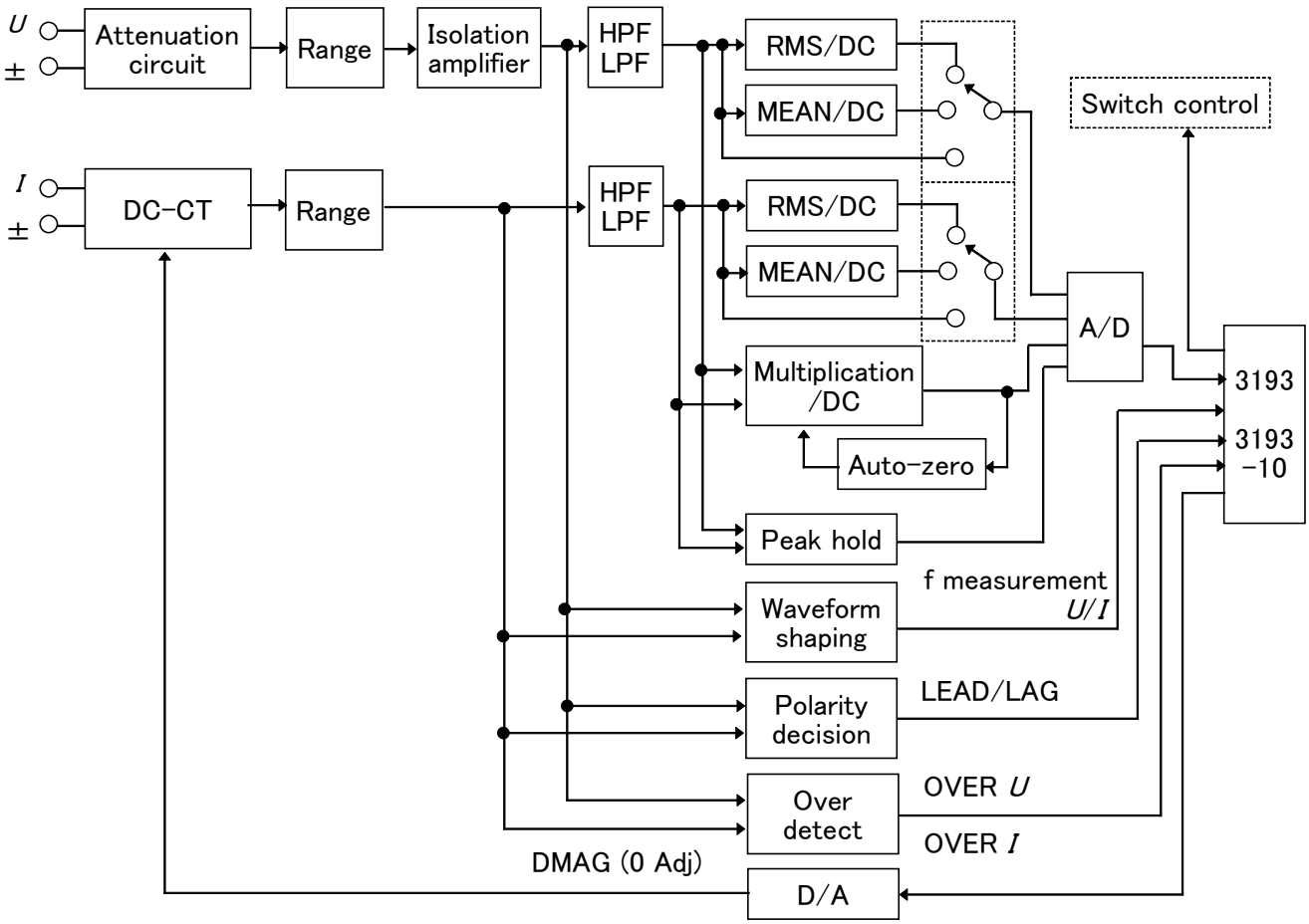

14.4.1 RMS Value (root-mean-square value)

Using a dedicated RMS-DC conversion IC, processing is carried out equivalent to the theoretical expression for effective value.

For rms values, the input signal waveform is converted to a DC voltage by a special-purpose analog rms-DC converter IC. Since this is an analog process, all signals within the frequency range of the specification are converted precisely.

$$\text{RMS value} = \sqrt{\frac{1}{T}\int_0^T e^2 \mathrm{dt}}$$

e : Input signal waveform
T : A period of input signal

14.4.2 MEAN Value (MEAN rectification effective value for display)

For MEAN values, the input signal waveform is converted to a DC voltage by an absolute value detecting circuit and a smoothing circuit Since this is an analog process, all signals within the frequency range of the specification are converted precisely.
This is found using an absolute value detecting circuit and a smoothing circuit. The theoretical expression used here for the MEAN value is as follows:

$$\text{Averaging value} = \frac{1}{T}\int_0^T |e|\,\mathrm{d}t$$

However, using this expression as it is for a sine wave of amplitude *A* and period 2 π, results in RMS and average values as follows:

$$\text{RMS value} = A/\sqrt{2}$$

$$\text{Averaging value} = 2A/\pi$$

$$\frac{\text{RMS value}}{\text{Averaging value}} = \frac{\pi}{2\sqrt{2}} \cong 1.1107$$

And thus for the same measured sine wave the figures do not agree. For this reason, to make the figures agree when a sine wave signal is input, the average value defined above is multiplied by a coefficient to give the MEAN value (mean rectification effective value for display).

$$\text{MEAN value} = \frac{\pi}{2\sqrt{2}} \times \text{Averaging value}$$

14.4.3 Active Power

If the sine wave voltage and sine wave current are e and i respectively, then this can be expressed as follows:

$$e = \sqrt{2}\,E\cos\omega t$$

$$i = \sqrt{2}\,I\cos(\omega t + \theta)$$

E	RMS value of voltage
I	RMS value of current
ω	angular frequency
t	time
θ	phase difference between voltage waveform and current waveform

The instantaneous power *p* is the product of *e* and *i*, as follows:

$$p = e \cdot i$$
$$= 2EI\cos\omega t \cdot \cos(\omega t + \theta)$$
$$= EI\cos(2\omega t + \theta) + EI\cos\theta$$

The DC component in this expression is the active power *P*:

$$P = EI\cos\theta$$

In the internal circuit, the instantaneous power *p* is computed by a multiplier IC, and the active power *P* is obtained by smoothing to give a DC voltage proportional to the active power *P*.

14.4.4 Waveform Peak Value Measurement Circuit

The waveform peak value is obtained by passing the signal waveform after absolute value detection through an analog peak hold circuit.

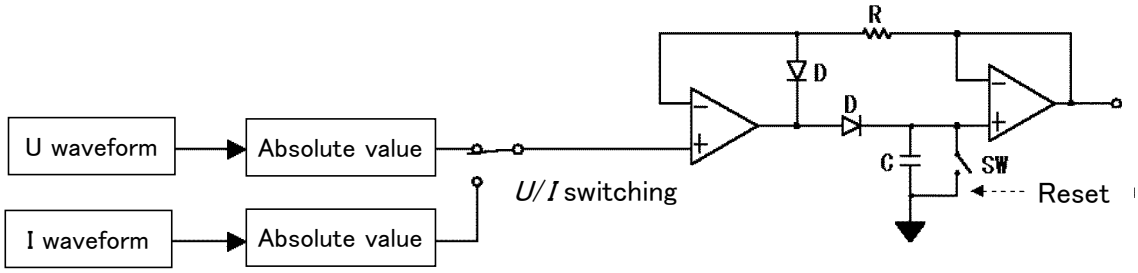

14.4.5 Crest Factor

The crest factor indicated the magnitude of the dynamic range of the tester, and is given by the following expression:

$$\text{Crest factor} = \frac{\text{Peak value}}{\text{RMS value}}$$

For example, when measuring a highly distorted waveform with a small effective value but a large peak value, if the measurement range is set to match the effective value the peak value of the distorted waveform will exceed the operating limits of the circuit, and produce a large measurement error. Therefore, for accurate measurement, it is important to know the magnitude of the peak value of the measured signal.
For the 9600 the crest factor is stipulated as not more than 6 (but without exceeding the maximum input voltage and current).
For example, in the 150 V range, the error is increased if the voltage waveform has a peak value exceeding 150 V× 6 = 900 V.

Chapter 15
9601 AC DIRECT INPUT UNIT (Option)

15.1 Overview

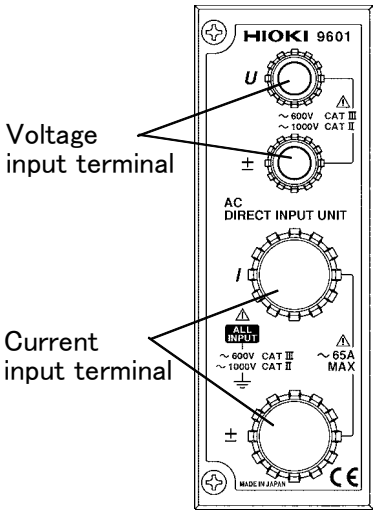

The 9601 AC direct connection input unit is a direct connection input unit for AC only.
It allows measurement of currents over a wide range, with nominal ranges from 0.2 A to 50 A.

⚠ DANGER

Do not exceed the maximum input voltage and current. Doing so can damage the unit or cause a serious accident.

⚠ WARNING

Be sure to connect the voltage input terminals, current input terminals correctly. Measurement which is attempted with the wiring connected incorrectly may cause damage to the unit or a short-circuit.

⚠ CAUTION

When the power of the 3193 is turned off, do not apply voltage or current to the voltage input terminal or current input terminal. Doing so may damage the unit.

15

15.2 Notes on Use

- The 9601 is a factory-fitted option. It therefore requires the 3193 unit for calibration or repair.
- For accurate measurement, allow one hour for warming up before use.
- It may not be possible to obtain accurate measurements close to a transformer or conductor carrying a large high-frequency current, or close to any device such as a radio transmitter generating a strong magnetic field.
- The 9601 active power measurement unit operates with an auto-zero circuit at 2.442 kHz. For this reason, an input signal with a frequency of 2.442 kHz will result in a periodically fluctuating display indication.
- When measuring a high frequency voltage to earth (for example the secondary side of an inverter), errors may occur in the measurement values.
- Limits are specified for the range in which voltage and current level accuracies are guaranteed, depending on the input frequency.
- The guaranteed accuracy ranges of frequency depend on the response, coupling mode, and low-pass filter settings.
- Depending on the response setting, display may not stabilize during measurement of low frequencies. If this occurs, use averaging.

15.3 Specifications (using with the HIOKI 3193)

		Voltage (*U*)	Current (*I*)	Active power (*P*)
Input type		Resistor voltage divider + isolation amplifier, for isolated input	Isolated input, using CT method	————
Measurement type		Analog processing: ・True effective value measurement ・Mean value rectification effective value measurement	Analog processing: ・True effective value measurement ・Mean value rectification effective value measurement	Analog processing: Active power measurement
Input resistance		2 MΩ±100 kΩ(±5%)	1 mΩ or less	————
Measurement range		6.0000/15.000/30.000 60.000/150.00/300.00 600.00 V/1.0000 kV	200.00/500.00 mA 1.0000/2.0000/5.0000 10.000/20.000/50.000 A	Depending on combination of voltage and current values.
Effective input range		5% to 110% (up to 100% for 1 kV range) or within the range accuracy assurance range for the signal frequency specified elsewhere (display range 0.1% to 130%(200 mA range), 0.2% to 130%(Others), 0.3% to 130%(1000V range))		
Maximum input voltage Maximum input current (55 Hz)		1000 Vrms 1500 Vpeak value	65 Arms 100 Apeak max.	————
Crest factor		(Measurement range×6) /measurement value or Maximum input voltage peak value/ measurement value	(Measurement range×6) /measurement value or Maximum input current peak value/ measurement value	————
Accuracy (Note 1) 23℃±5℃ (73°F±9°F) 80%RH max. Power factor=1 1 hour warm-up Input sine wave Voltage to earth 0 V Guaranteed accuracy period: six months	5-10 Hz	±2.5%f.s	±2.5%f.s	±2.5%f.s
	10 - 20 Hz	±1.0%f.s	±1.0%f.s	±1.0%f.s
	20 - 45 Hz	±0.1% rdg.±0.2%f.s.	±0.1% rdg.±0.2%f.s.	±0.1% rdg.±0.2%f.s.
	45 - 66 Hz	±0.1% rdg.±0.1%f.s.	±0.1% rdg.±0.1%f.s.	±0.1% rdg.±0.1%f.s.
	66 Hz - 5 kHz	±0.1% rdg.±0.2%f.s.	±0.1% rdg.±0.2%f.s.	±0.1% rdg.±0.2%f.s.
	5 k - 10 kHz	±0.2% rdg.±0.4%f.s	±0.2% rdg.±0.4%f.s.	±0.2% rdg.±0.4%f.s.
	10 k - 20 kHz	±1.0%f.s.	±1.0%f.s.	±1.0%f.s.
	20 k - 50 kHz	±2.5%f.s.	±2.5%f.s.	±2.5%f.s.
	50 k - 100 kHz	±10.0%f.s.	±10.0%f.s.	±10.0%f.s.

Note 1: There are limited ranges for the levels at which the accuracy is specified, depending on the input signal frequency.
Note 2: The accuracy specified range varies depending on switching response, coupling mode, and LPF. See each column on the next page.

	Voltage (*U*)	Current (*I*)	Active power (*P*)
Power factor influence (55Hz)	———	———	±0.15%f.s. (power factor=0)
Accuracy of waveform peak measurement (voltage or current)	±1%f.s. (5 Hz to 1 kHz), ±2%f.s. (1 kHz to 10 kHz), ±10%f.s. (10 kHz to 100 kHz) Effective input range: rms value of sine wave is in the effective input range.		
Response (analog output response time)	FAST (0.1 s): Specification is met for 50 Hz and above. MID (0.8 s): Specification is met for 10 Hz and above. SLOW (5.0 s): Specification is met The analog output response time is the time such that for an input change from 0% to 90% and 100% to 10% of the nominal range value, the value is within ±1% of the final stabilized value.		
LPF switching	OFF/500 Hz (-3dB) The accuracy specification is met at 60 Hz or less.		
phF switching	OFF/200 Hz (-3dB) (Stabilization filter for *U* and *I* polarity determination.) There is no effect on the *U*, *I*, or *P* accuracy.		
Temperature coefficient (0–18, 28–40℃)	±0.03%f.s./℃ or less		
Analog output (*U*/*I*/*P*) (When input DC, sine wave, range full scale)	DC±5 Vf.s. (1000 V range: DC±3.333 V f.s.) Display accuracy: ±0.2%f.s		
Monitor output (*U*/*I*) (When input DC, sine wave, range full scale)	1 Vrms f.s. (1000 V range: 0.6667 Vrms f.s.) Display accuracy: ±0.2%f.s		
Maximum rated voltage to earth	1000 V		
Influence of maximum input voltage to earth (1000 Vrms, 50/60 Hz)	±0.05%f.s. max (When applying between input terminal and case)		
Dielectric strength (50/60 Hz)	5.55 kV AC (1 mA) for 1 minute (When using with the 3193) Between *U*/*I* input terminals and case, between *U*/*I* input terminals and power plug		
Insulation resistance	100 MΩ or more at 500 V DC (When using with the 3193) Between *U*/*I* input terminals and case, between *U*/*I* input terminals and power plug		

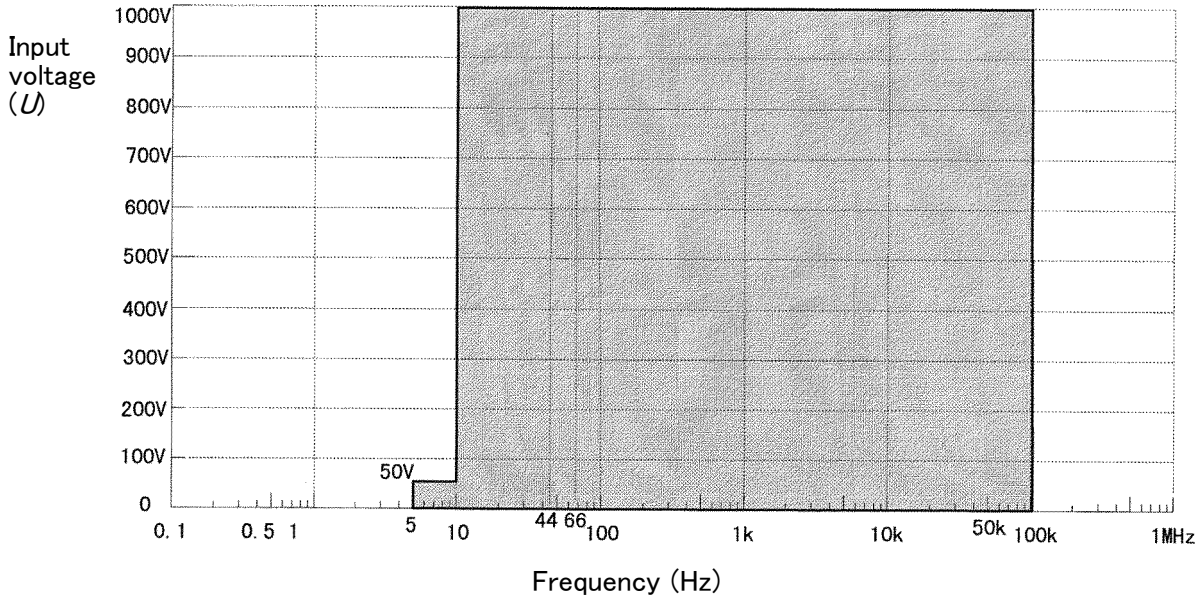

9601 Voltage Accuracy Assurance Range

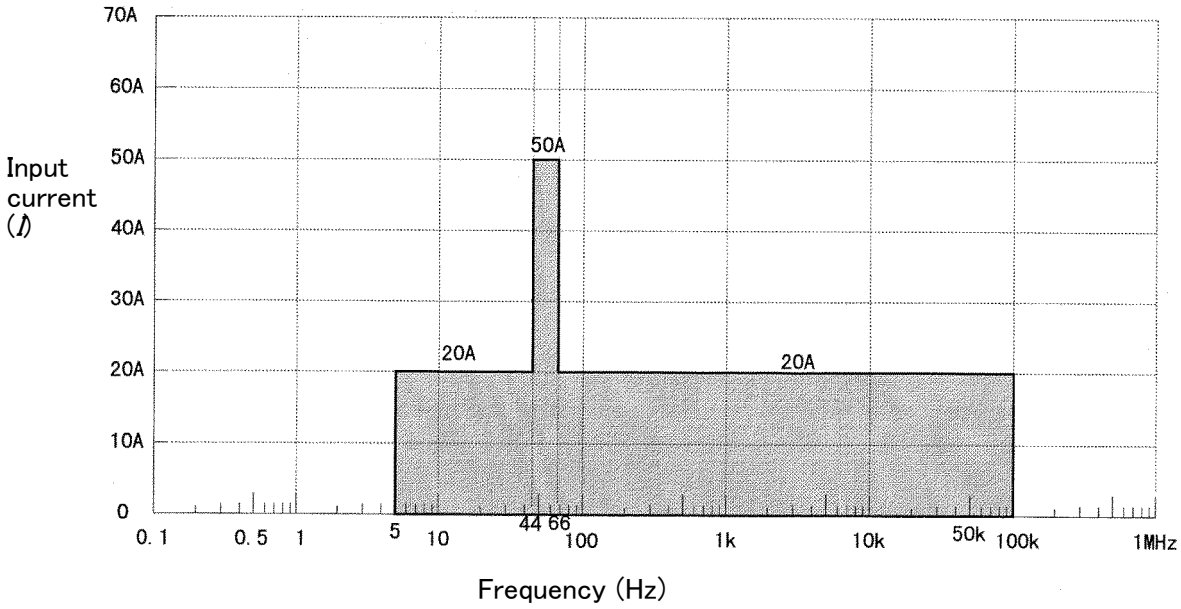

9601 Current Accuracy Assurance Range

15.4 Internal Block Diagram

The voltage value is converted by attenuator and range circuits to a voltage signal waveform proportional to the measured voltage, then isolated by an isolating amplifier.
The sensor input is converted in a range circuit to a voltage signal waveform proportional to the measurement current.

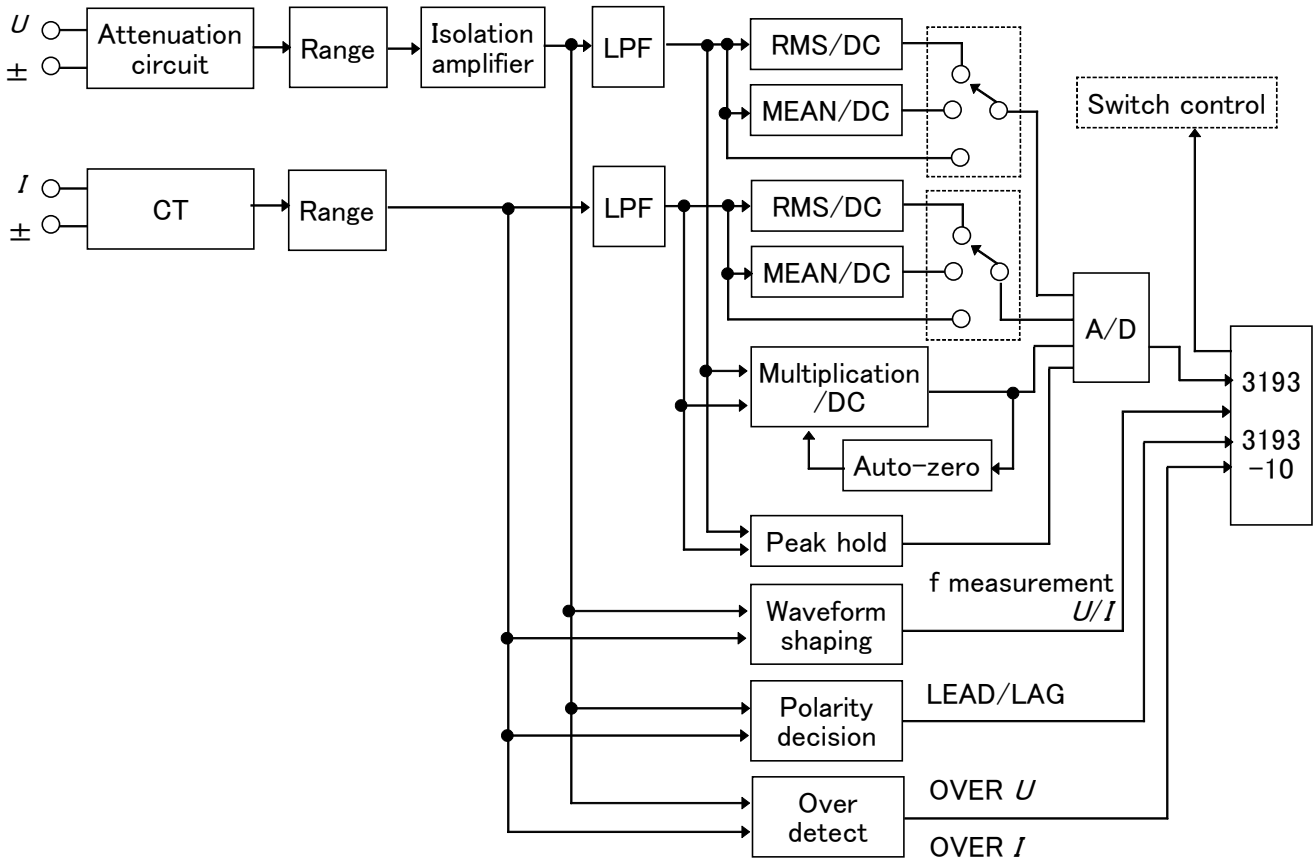

Chapter 16
9602 AC/DC CLAMP INPUT UNIT (Option)

16.1 Overview

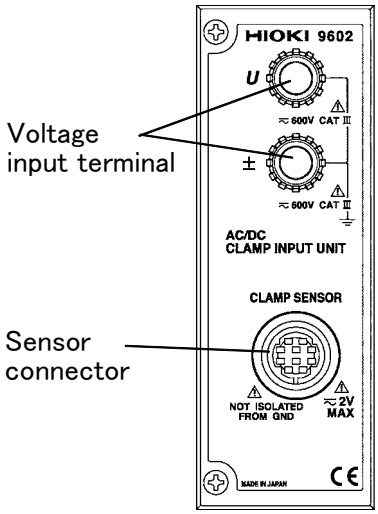

The 9602 AC/DC CLAMP INPUT UNIT enables power measurement over a wide frequency range, including DC, and from 0.5 Hz to 200 kHz.
Since an external clamp sensor is used, it is not necessary to disconnect the line being measured.

⚠ DANGER

Do not exceed the maximum input voltage and current. Doing so can damage the unit or cause a serious accident.

⚠ WARNING

Be sure to connect the voltage input terminals, current input terminals correctly. Measurement which is attempted with the wiring connected incorrectly may cause damage to the unit or a short-circuit.

⚠ CAUTION

- When the power of the 3193 is turned off, do not apply voltage or current to the voltage input terminal or external current sensor. Doing so may damage the unit.
- Before connecting the current sensor to the 3193, always turn off the power for the 3193. If not, it could result in damage to the unit or current sensor.

16.2 Notes on Use

- The 9602 is a factory-fitted option. It therefore requires the 3193 unit for calibration or repair.
- For accurate measurement, allow one hour for warming up before use.
- It may not be possible to obtain accurate measurements close to a transformer or conductor carrying a large high-frequency current, or close to any device such as a radio transmitter generating a strong magnetic field.
- The 9602 active power measurement unit operates with an auto-zero circuit at 2.442 kHz. For this reason, an input signal with a frequency of 2.442 kHz will result in a periodically fluctuating display indication.
- When measuring a high frequency voltage to earth (for example the secondary side of an inverter), errors may occur in the measurement values.
- Limits are specified for the range in which voltage and current level accuracies are guaranteed, depending on the input frequency.
- The guaranteed accuracy ranges of frequency depend on the response, coupling mode, and low-pass filter settings.
- When the 9602 is used with an AC-only current sensor, the 9602 functions only as an AC power meter. In this case, AC coupling is automatically used for the voltage measurement, and a DC voltage cannot be measured.
- The current sensor which can be combined with the 9602

AC sensor	9270 CLAMP ON SENSOR (20 AAC)
	9271 CLAMP ON SENSOR (200 AAC)
	9272 CLAMP ON SENSOR (20/200 AAC)
	9272-10 CLAMP ON SENSOR (20/200 AAC)
AC/DC sensor	9277 UNIVERSAL CLAMP ON CT (20 A AC/DC)
	9278 UNIVERSAL CLAMP ON CT (200 A AC/DC)
	9279 UNIVERSAL CLAMP ON CT (500 A AC/DC)
	CT6862 AC/DC CURRENT SENSOR (50 A AC/DC)
	CT6863 AC/DC CURRENT SENSOR (200 A AC/DC)
	9709 AC/DC CURRENT SENSOR (500 A AC/DC)
	CT6865 AC/DC CURRENT SENSOR (1000 A AC/DC)

- Set the low-pass filter (LPF) to 300 kHz.
- Depending on the response setting, display may not stabilize during measurement of low frequencies. If this occurs, use averaging.

16.3 Specifications (using with the HIOKI 3193)

	Voltage (*U*)	Current (*I*)	Active power (*P*)
Input type	Resistor voltage divider + isolation amplifier, for isolated input	Isolated input, using current sensor	————
Measurement type	Analog processing: ・True effective value measurement ・Mean value rectification effective value measurement ・DC measurement	Analog processing: ・True effective value measurement ・Mean value rectification effective value measurement ・DC measurement	Analog processing: Active power measurement
Input resistance	2 MΩ±100 kΩ(±5%)	200 kΩ±10 kΩ(±5%)	————
Measurement range	6.0000/15.000/30.000 60.000/150.00/300.00 600.00 V	When using 20 A rated sensor: 500.00 mA/ 1.0000/ 2.0000/ 5.0000 10.000/ 20.000 A When using 50 A rated sensor: 1.2500/ 2.5000/ 5.0000/ 12.500/ 25.000/ 50.000A When using 200 A rated sensor: 5.0000/ 10.000/ 20.000/ 50.000/ 100.00/ 200.00 A When using 500 A rated sensor: 10.000/ 20.000/ 50.000/ 100.00/ 200.00/ 500.00 A When using 1000 A rated sensor:20.000/40.000/ 100.00/200.00/400.00/ 1000.0 A (CT ratio = 2, the internal operation range and display range are the same as the 500A sensor.)	Depending on combination of voltage and current values.
Effective input range	5% to 110% (up to 100% for 600 V range) or within the range accuracy assurance range for the signal frequency specified elsewhere Display range: 1% to 130% (when minimum range on current side, AC/ AC+DC) 0.2% to 130% (for others)		
Maximum input voltage Maximum input current (55 Hz)	600 Vrms 850 Vpeak	Input range up to the maximum input current of the current sensor	————
Crest factor	(Measurement range×6) /measurement value or Maximum input voltage peak value/ measurement value	Lower of (measurement range×6)/(measurement value) and (input peak value up to maximum input current of the current sensor)/ (measurement value)	————

		Voltage (*U*)	Current (*I*)	Active power (*P*)
Accuracy (Note 1) 23℃±5℃ (73°F±9°F) 80%RH max. Power factor=1 1 hour warm-up Input sine wave Voltage to earth 0 V LPF=300kHz Guaranteed accuracy period: six months	DC	±0.1% rdg.±0.2%f.s.	±0.1% rdg.±0.2%f.s.	±0.1% rdg.±0.2%f.s.
	0.5 – 1 Hz	±0.5% rdg.±0.5%f.s	±0.5% rdg.±0.5%f.s.	±0.5% rdg.±0.5%f.s.
	1 – 10 Hz	±0.2% rdg.±0.2%f.s.	±0.2% rdg.±0.2%f.s.	±0.2% rdg.±0.2%f.s.
	10 – 45 Hz	±0.1% rdg.±0.2%f.s.	±0.1% rdg.±0.2%f.s.	±0.1% rdg.±0.2%f.s.
	45 – 66 Hz	±0.1% rdg.±0.1%f.s.	±0.1% rdg.±0.1%f.s.	±0.1% rdg.±0.1%f.s.
	66 Hz – 10 kHz	±0.1% rdg.±0.2%f.s.	±0.1% rdg.±0.2%f.s.	±0.1% rdg.±0.2%f.s.
	10 k – 50 kHz	±0.5% rdg.±0.5%f.s.	±0.5% rdg.±0.5%f.s.	±0.5% rdg.±0.5%f.s.
	50 k – 100 kHz			±2.0% rdg.±1.0%f.s.
	100 k – 200 kHz	±15%f.s.	±15%f.s.	±30%f.s.

Note 1: There are limited ranges for the levels at which the accuracy is specified, depending on the input signal frequency.
Note 2: The accuracy specified range varies depending on switching response and coupling mode. See each column on the next page.
Note 3: When using the AC sensor, the coupling mode is automatically set to AC mode.
Note 4: When used with a sensor, the specification is valid only within the frequency range of the sensor.
Note 5: For the accuracy of current and power when using with the sensor, the accuracy of sensor and frequency characteristic are added.
Note 6: Use a 300 kHz low-pass filter for noise elimination on the sensor.

Effect of power factor (55Hz)	—————	—————	±0.15%f.s. (power factor=0)
Accuracy of waveform peak measurement (voltage or current)	±1%f.s. (5 Hz to 1 kHz), ±2%f.s. (1 kHz to 10 kHz), ±10%f.s. (10 kHz to 100 kHz) Effective input range: rms value of sine wave is in the effective input range.		
Response (analog output response time)	FAST (0.1 s): Specification is met for DC and 50 Hz and above. MID (0.8 s): Specification is met for DC and 10 Hz and above. SLOW (5.0 s): Specification is met for DC and 0.5 Hz and above. The analog output response time is the time such that for an input change from 0% to 90% and 100% to 10% of the nominal range value, the value is within ±1% of the final stabilized value.		
Coupling mode switching	AC mode (Specification is met for 10 Hz and above.) AC+DC mode DC mode (Specification is met for only DC.)		
LPF switching	OFF/500 Hz/5 kHz/300 kHz (-3dB) The accuracy specification is met as follows 500 Hz: 60 Hz or less, 5 kHz: 100 Hz or less, 300 kHz: accuracy specification		
phF switching	OFF/200 Hz (Stabilization filter for *U* and *I* polarity determination.) There is no effect on the *U*, *I*, or *P* accuracy.		
Temperature coefficient (0–18, 28–40℃)	±0.03%f.s./℃ or less		
Analog output (*U*/*I*/*P*) (When input DC, sine wave, range full scale)	±5 Vf.s. Display accuracy: ±0.2%f.s		
Monitor output (*U*/*I*) (When input DC, sine wave, range full scale)	1 Vrms f.s. Display accuracy (100 kHz or less): ±0.2%f.s (100 kHz to 200 kHz): ±3dB		
Maximum rated voltage to earth	600 V		

	Voltage (*U*)	Current (*I*)	Active power (*P*)
Influence of maximum rated voltage to earth (600 Vrms at 50/60 Hz)	±0.05%f.s. max (When applying between voltage input terminal and case)		
Dielectric strength (50/60 Hz)	5.55 kV AC (1 mA) for 1 minute (When using with the 3193) Between *U* input terminals and case, between *U* input terminals and power plug, between *U* input terminals and sensor input terminal		
Insulation resistance	100 MΩ or more at 500 V DC (When using with the 3193) Between *U* input terminals and sensor input terminal, between *U* input terminals and case, between *U* input terminals and power plug		

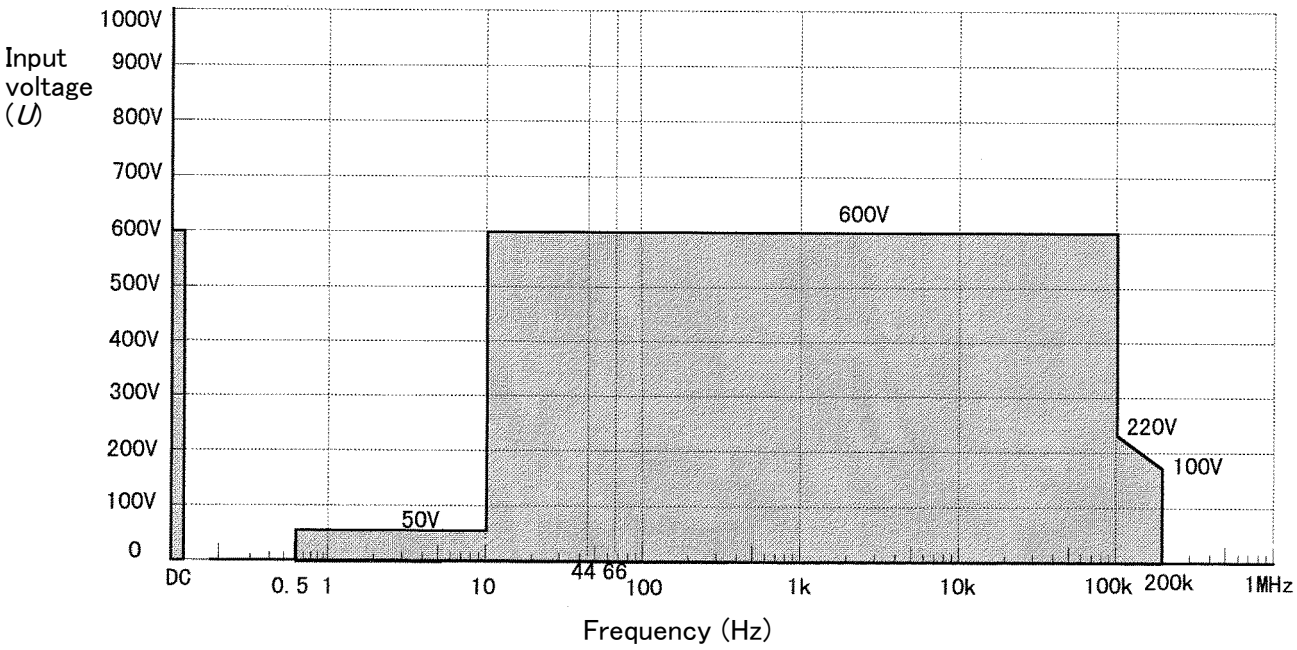

9602 Voltage Accuracy Assurance Range

16.4 Internal Block Diagram

The voltage value is converted by attenuator and range circuits to a voltage signal waveform proportional to the measured voltage, then isolated by an isolating amplifier.
The sensor input is converted in a range circuit to a voltage signal waveform proportional to the measurement current.

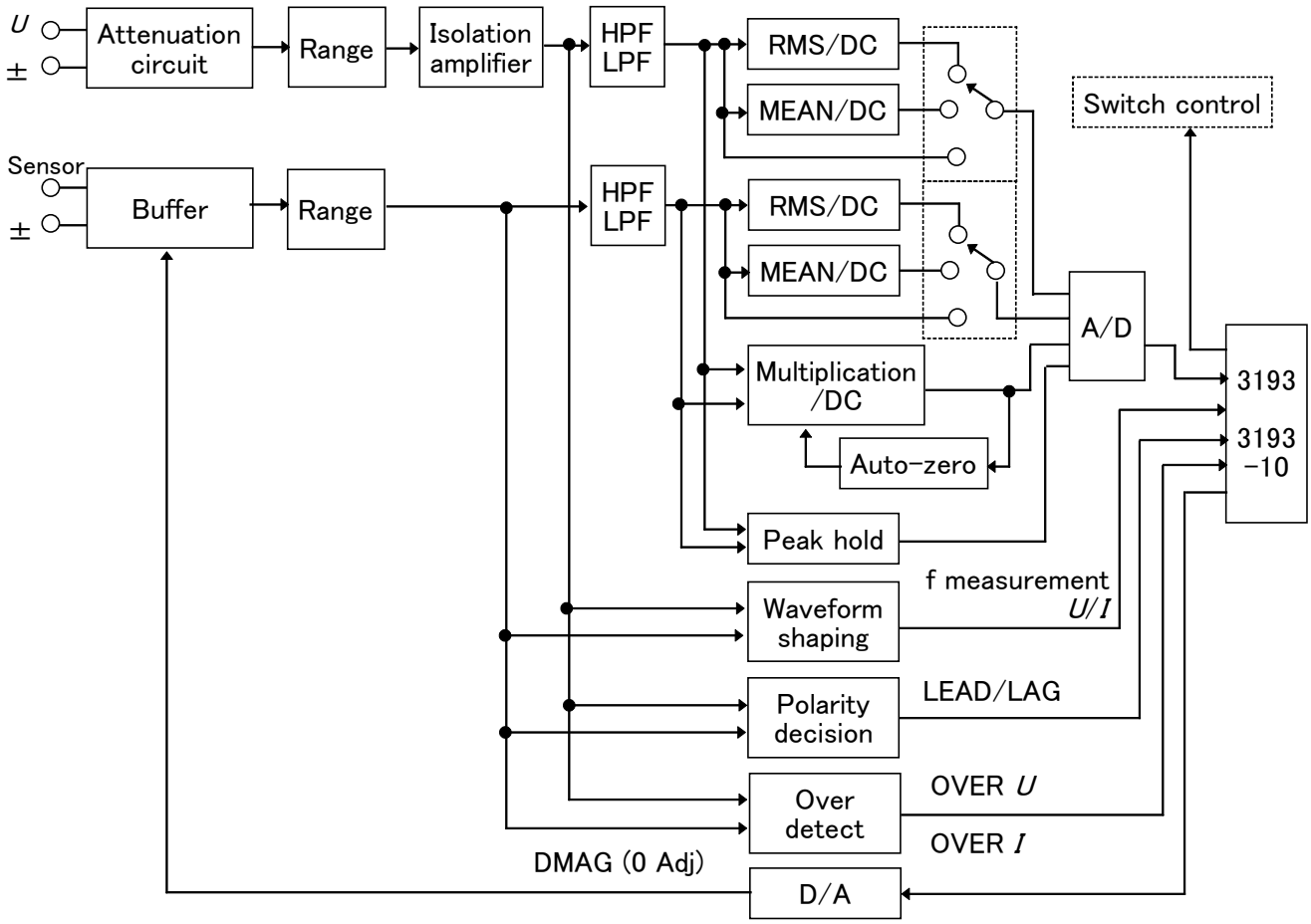

For details on RMS value, MEAN value, active power, waveform peak value measurement circuit, peakover detect circuit, see Chapter 14.

Chapter 17
9603 EXTERNAL SIGNAL INPUT UNIT (Option)

17.1 Overview

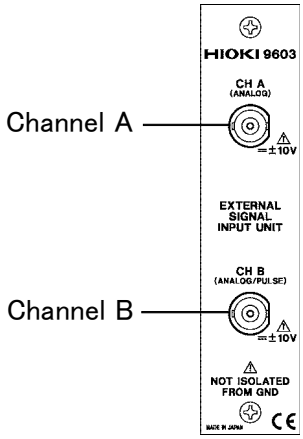

The 9603 EXTERNAL SIGNAL INPUT UNIT, when installed in the 3193, allows an analog signal output by another device to be input and combined with other measurements. In particular, combination with a motor torque gauge or rotation counter allows the 3193 to compute and display the motor power and efficiency.

⚠ DANGER

Do not exceed the maximum input voltage and current. Doing so can damage the unit or cause a serious accident.

⚠ CAUTION

The measurement input terminal (BNC) and chassis of the 3193 are not isolated from each other.

NOTE

- The 9603 is a factory-fitted option. It therefore requires the 3193 unit for calibration or repair.
- For accurate measurement, allow one hour for warming up before use.
- It is not possible to measure torque or rotation speed with the 9603 alone. It must be combined with a torque gauge or rotation counter with an analog output.
- It may not be possible to obtain accurate measurements close to a transformer or conductor carrying a large high-frequency current, or close to any device such as a radio transmitter generating a strong magnetic field.
- When no signal is input, cover the BNC connector with the supplied cap.

17.2 Display Screen

There are two display screens: showing two measurement channels and showing the motor power. Either can be selected from the 9603 display within the STATUS screen.

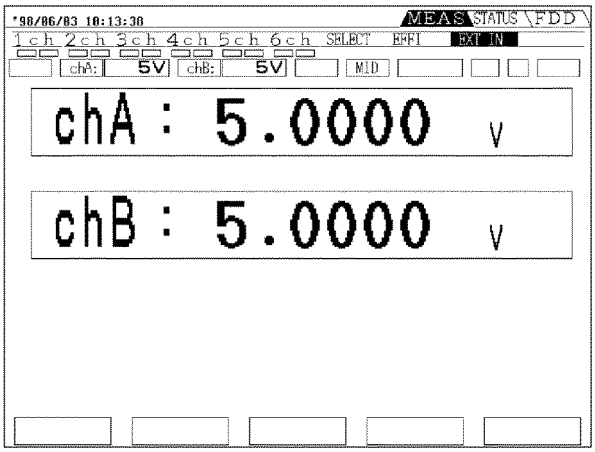

Two measurement channels

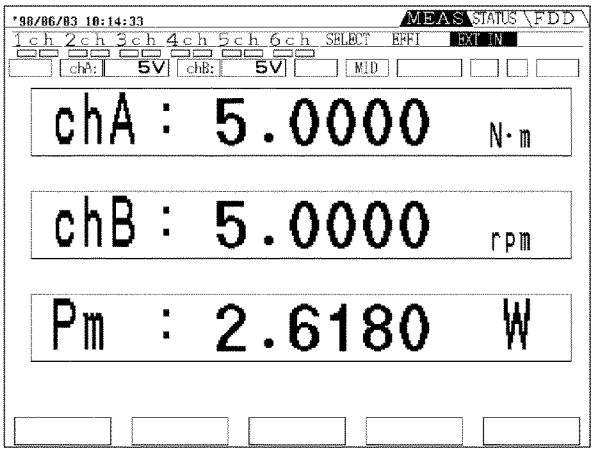

Motor power

17.3 Setting Method

17.3.1 Changing the Voltage

Both channels A and B have three ranges, of ±1 V, ±5 V, and ±10 V.

Changing on the MEAS screen

1. Display the "EXT UNIT" page on the MEAS screen.
2. Select range using the panel keys.
   The range for channel A corresponds to the voltage range switching key, and the range for channel B corresponds to the current range switching key.

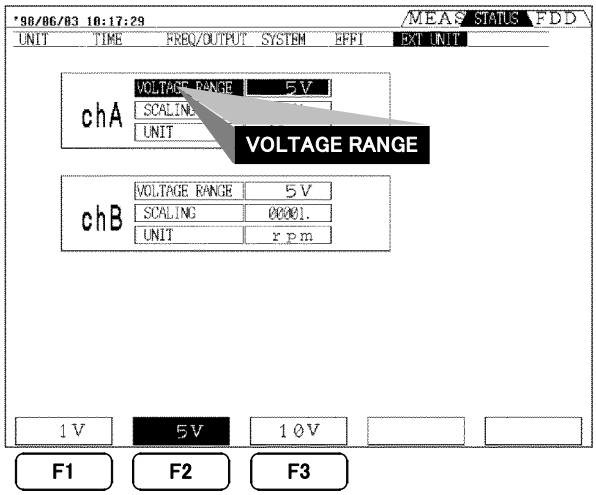

Changing on the STATUS screen

1. Display the "EXT UNIT" page on the STATUS screen.
2. With the **CURSOR** keys, move the cursor to the "VOLTAGE RANGE" to be changed, and select the voltage range with function keys F1 (1 V), F2 (5 V), or F3 (10 V).

17.3.2 Setting the Scaling

Input DC voltage values can be scaled by an arbitrary factor to display converted units.

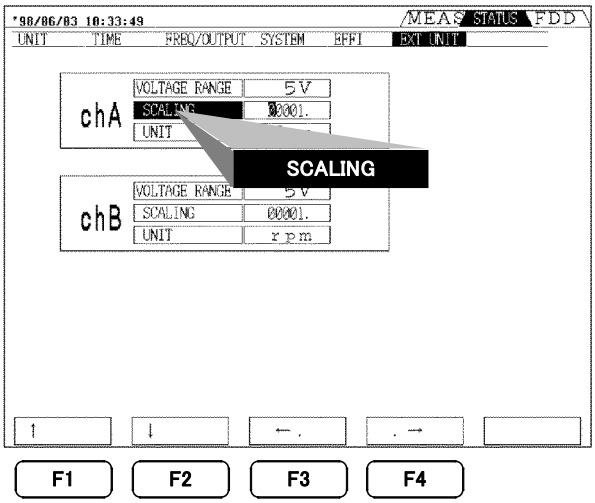

When the scaling value for channel A is set to 100;

1. Display the "EXT UNIT" page on the STATUS screen.
2. Using the **CURSOR** keys, move the cursor to the scaling for channel A.
3. Using the F1 (↑) and F2 (↓), move the cursor to the desired digit and press F3 (←.) and F4 (.→) to input the numerical value (0 to 9).

NOTE

- The scaling setting range is 0.0001 to 99999.
- When the voltage range for channel B is set to the pulse input, the range is 1 to 99999.
- When the unit for channel B is set to Hz, the scaling value is 1.

17.3.3 Setting the Units

Input DC voltage values can be displayed together with a unit designation.

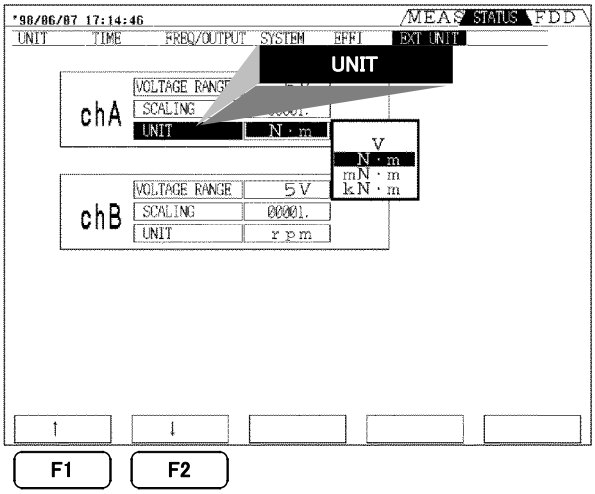

1. Display the "EXT UNIT" page on the STATUS screen.
2. Using the **CURSOR** keys, move the cursor to"UNIT" and press F1 (↑) or F2 (↓) to set the units.

   Unit for channel A

   (space)⇔ **V** ⇔ **N·m** ⇔ **mN·m** ⇔ **kN·m** ⇔ **kgf·m** ⇔ **kgf·cm**

   Unit for channel B

   (space)⇔ **V** ⇔ **rpm** ⇔ **N·m** ⇔ **mN·m** ⇔ **kN·m** ⇔ **kgf·m** ⇔ **kgf·cm**

   When the voltage range for channel B is set to PULSE

   Hz ⇔ **rpm**

17.3.4 Setting the Pulse

By selecting a pulse input to channel B, the 3193 frequency measurement function can be used to measure a frequency. By setting the unit designation to "rpm" this can be used to directly display the rotation speed of a motor or other device.

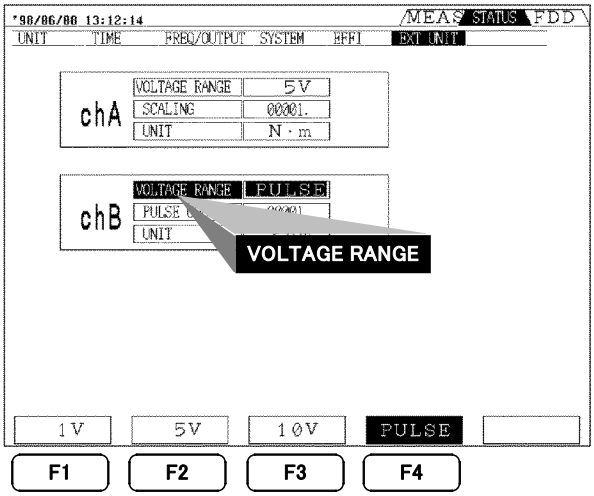

1. Display the "EXT UNIT" page on the STATUS screen.
2. Using the **CURSOR** keys, move the cursor to"VOLTAGE RANGE" for channel B, and press F4 (PULSE)

   If the unit designation is set to "rpm", it is necessary to set the number of pulses input per rotation. In this case, set the Scaling item to the number of pulses for each rotation of the motor.

$$\text{Display value (rpm)} = \frac{\text{Measurement frequency} \times 60}{\text{Number of pulses for each rotation of the motor}}$$

NOTE

- Setting a pulse input signal to channel B unconditionally assigns the frequency measurement function of the 3193 to fc. This ends any previous source set for fc.
- The frequency range of fc is set to auto-ranging. To fix the frequency range, set the range on "FREQ/OUTPUT" page on STATUS screen.

17.3.5 Calculating Motor Power (*P*m)

When the units for channel A are set to torque (N·m, mN·m, kN·m, kgf·m, kgf·cm) and the units for channel B are set to rotation rate (rpm), then the following expression is automatically evaluated and displayed.

Unit for channel A	Motor power calculation
N·m	$\text{Display value for channel A} \times \frac{2 \times \pi \times \text{display value for channel B}}{60}$ (W)
mN·m	$\text{Display value for channel A} \times \frac{2 \times \pi \times \text{display value for channel B}}{60 \times 1000}$ (W)
kN·m	$\text{Display value for channel A} \times \frac{2 \times \pi \times \text{display value for channel B} \times 1000}{60}$ (W)
kgf·m	$\text{Display value for channel A} \times \frac{2 \times \pi \times \text{display value for channel B} \times 9.80665}{60}$ (W)
kgf·cm	$\text{Display value for channel A} \times \frac{2 \times \pi \times \text{display value for channel B} \times 9.80665}{60 \times 100}$ (W)

NOTE

The calculation expression depends on the torque units, and care should therefore be taken when setting the units.

17.4 Specifications

(Using with the HIOKI 3193)

Number of input channels	2 channels (BNC) channel A and B
Input type	Differential input
Input resistance	200 kΩ±10 kΩ(±5%)
Measurement range	±1.0000/ ±5.0000/ ±10.000 V
Effective input range	5% to 110% (display range 0.1% to 130%)
Maximum input voltage	±20 V
DC measurement accuracy (23℃±5℃ (73°F±9°F), 80%RH or less)	±0.1% rdg.±0.1%f.s. Guaranteed accuracy period six months
Response (Analog output response time)	FAST (0.1 s)/ MID (0.8 s)/SLOW (5.0 s) (The analog output response time is the time such that for an input change from 0% to 90% and 100% to 10% of the nominal range value, the value is within ±1% of the final stabilized value.)
Analog output	±5 Vf.s. Display accuracy: ±0.2%f.s
Frequency measurement at pulse input (chB only)	1 Hz to 100 kHz (pulse width: 5 μs or more) (for measurement accuracy and range, specifications of the frequency measurement)

17.5 Internal Block Diagram

The DC voltage input through the BNC connector is converted, in differential and range circuits, to a voltage proportional to the input voltage, and transferred to the 3193 proper by an A/D converter.
When measuring a rotation rate by counting pulses, channel B can be switched so that pulses are counted by the frequency measurement function in the 3193 proper.

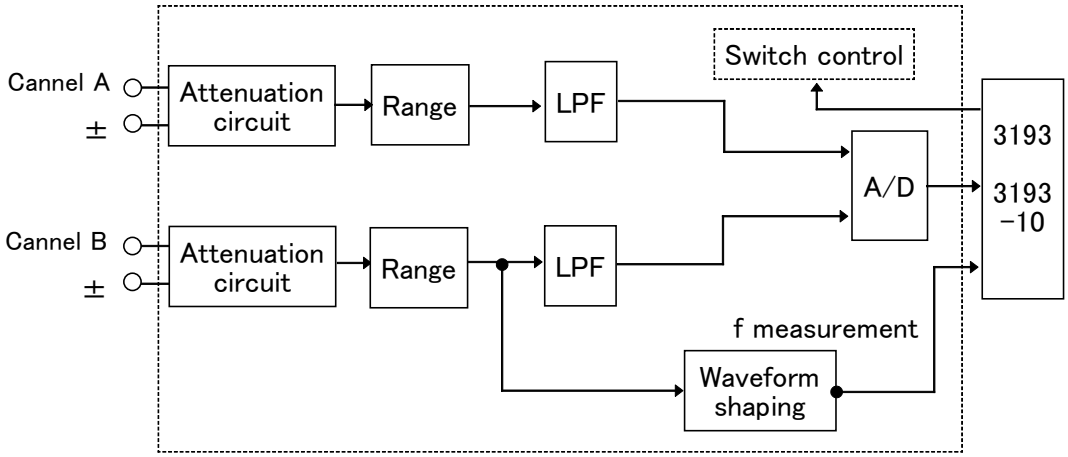

Chapter 18
Maintenance and Service

18.1 Cautions

⚠ WARNING

- **Do not attempt to adjust or repair the unit with the case open and with voltage being input. Such adjustments or repairs should only be made by a technician who fully understands the dangers involved.**
- **If any of the power meter's protective functions are damaged, either dispose of it so that it cannot be used, or else label it clearly so that no one will use it unknowingly.**

⚠ CAUTION

- Gently wipe dirt from the surface of the unit with a soft cloth moistened with a small amount of water or mild detergent. Do not try to clean the unit using cleaners containing organic solvents such as benzine, alcohol, acetone, ether, ketones, thinners, or gasoline. They may cause discoloration or damage.
- If a problem is found, contact your dealer or HIOKI representative. Pack the unit carefully so that it will not be damaged during transport, and write a detailed description of the problem. HIOKI cannot bear any responsibility for damage that occurs during shipment.

Fuses

This unit uses a switched power supply and is equipped with an internal fuse. This fuse cannot be replaced externally.

Exchangeable parts and lifespan

Parts	Lifespan	Remarks
Electrolytic capacitor	about 10 years	The lifespan of the electrolytic capacitor varies greatly depending on the usage environment. It will deteriorate by approximately four years if used in a harsh environment (surrounding temperature of 40 degrees), or when the ventilation holes are blocked. When the electrolytic capacitor deteriorates, the HIOKI 3193 may malfunction. Replace it regularly.
Lithium battery	about 10 years	The HIOKI 3193 includes a back-up lithium battery. The lifespan of the back-up battery is approximately ten years. If there is a big delay with the date or the time when the device is switched on, it is time to replace the battery. Contact the nearest HIOKI representative for details.
LCD back light (Brightness is halved)	about 50.000 hours	Regular replacement is necessary.

18.2 Disposing of the Unit

This unit uses a lithium battery for memory backup. Remove the lithium battery before disposing of the power meter, and follow the prescribed method when disposing of the unit.

⚠ WARNING

- **To avoid electric shock when removing the battery, disconnect the input cable, clamp on sensor and power cord.**
- **Do not short-circuit used batteries, disassemble them, or throw them in a fire. Doing so may cause the batteries to explode.**
- **Keep used batteries out of the reach of children. Dispose of used batteries according to their type in the prescribed manner and in the proper location.**

(1) Tools required for disassembly

The following tools are required in order to disassemble this unit:
・One Phillips screwdriver
・One pair of wire cutters

(2) Disassembly

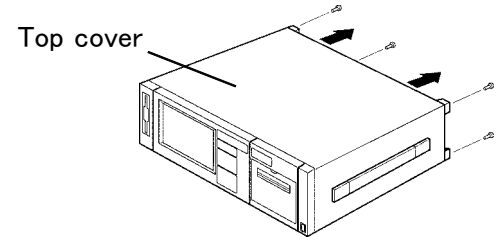

1. As shown in the figure left, remove the supporting foot at the rear, and slide off the top cover.

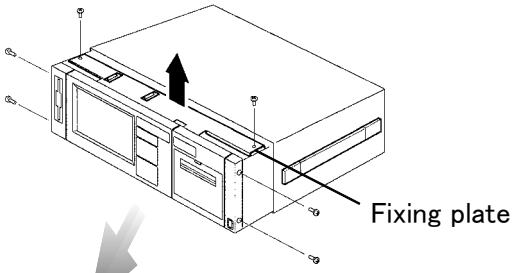

2. Remove the fixing plate.

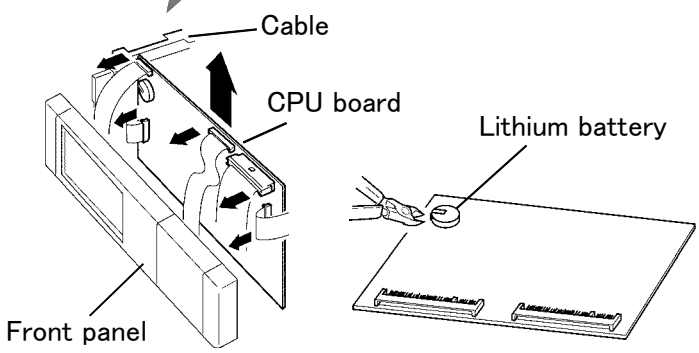

3. Remove the front panel and cable, and then remove the CPU board.
4. As shown in the figure on the left, the lithium battery is on the board; cut the two leads with nippers, and remove from the board.

CALIFORNIA, USA ONLY
This product contains a CR Coin Lithium Battery which contains Perchlorate Material - special handling may apply.
See www.dtsc.ca.gov/hazardouswaste/perchlorate

Chapter 19
Rack Mounting

19.1 Rack Mounting Fittings

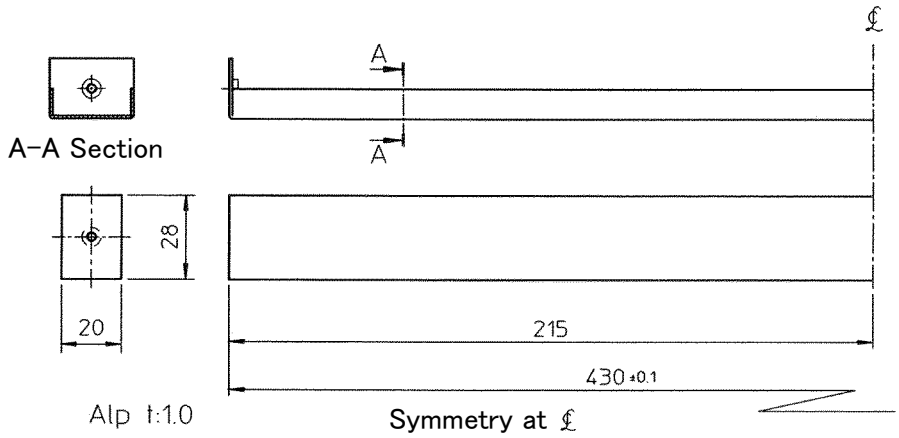

Fittings for EIA (19-inch) standard rack mounting

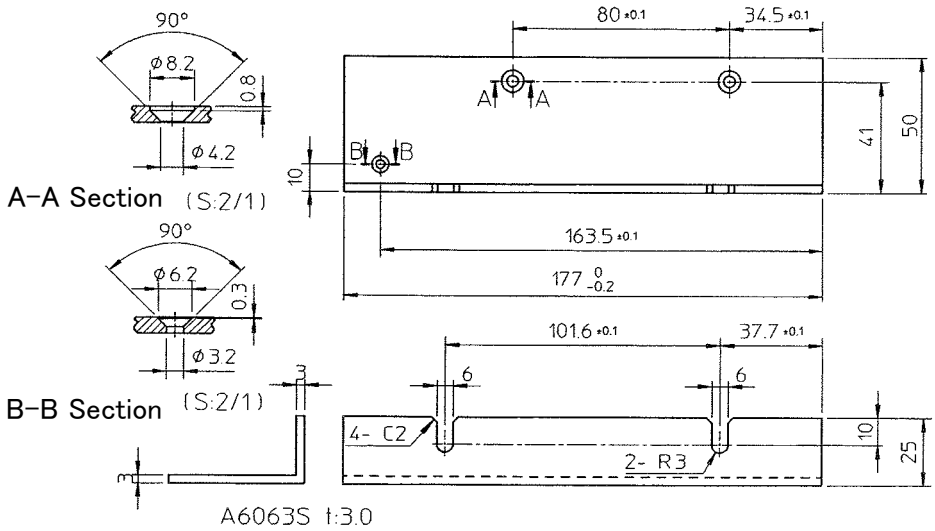

Fittings for EIA (19-inch) standard rack mounting on the right side

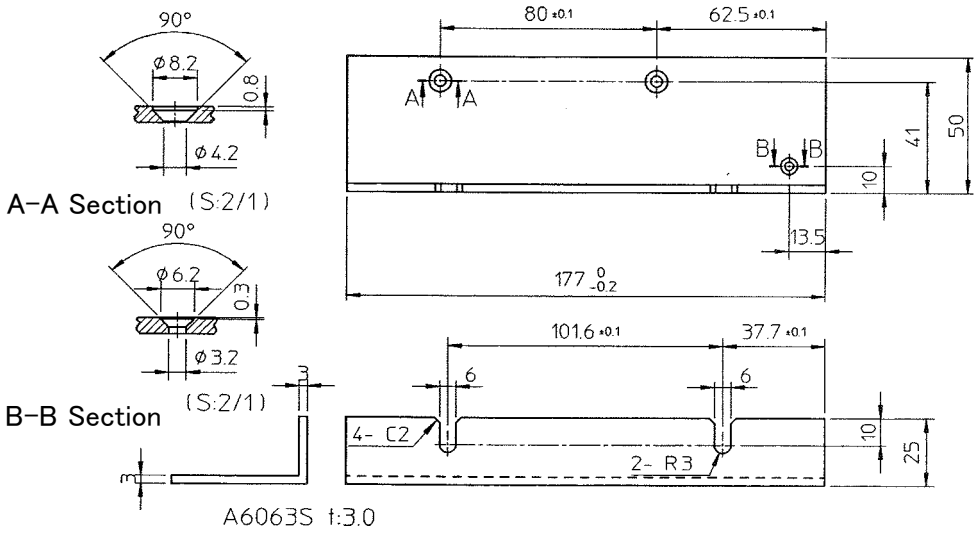

Fittings for EIA (19-inch) standard rack mounting on the left side

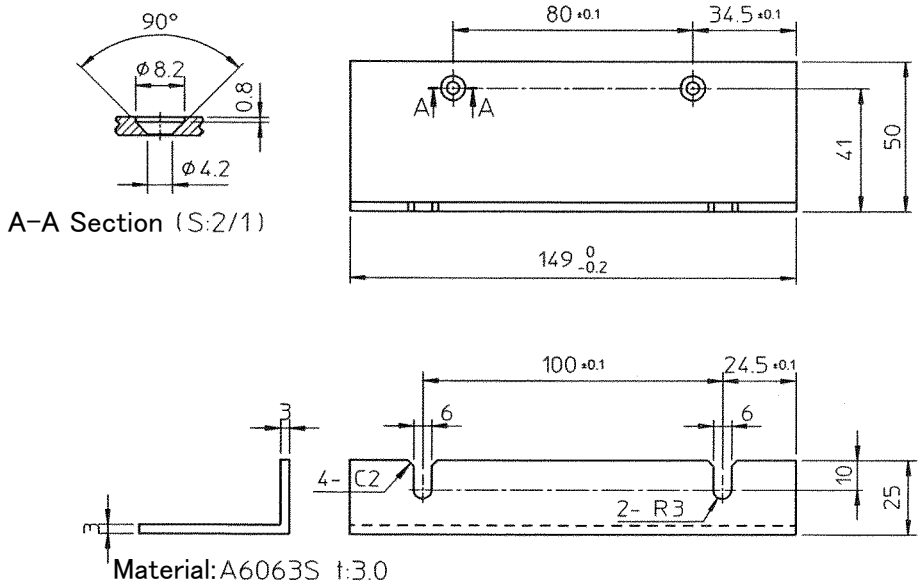

Fittings for JIS standard rack mounting

19.2 Installation Procedures

⚠ WARNING

When installing the unit into the rack, or when installing handle or stand removed, use the specified screws. Using screws that are longer than specified will cause internal short circuits, resulting in destruction of the equipment and a possible electrocution hazard.

NOTE

To maintain the measurement accuracy of the unit, bear the following cooling measures in mind:
Do not obstruct the ventilation holes
Keep away from sources of heat
If rack mounted, install a cooling fan

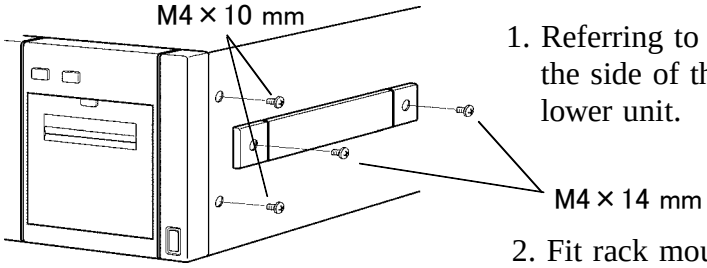

1. Referring to the illustration, remove the screws on the side of the unit, handle and support foot on the lower unit.

2. Fit rack mounting fixtures, using the appropriate rack mounting fixtures for the type of rack being used.

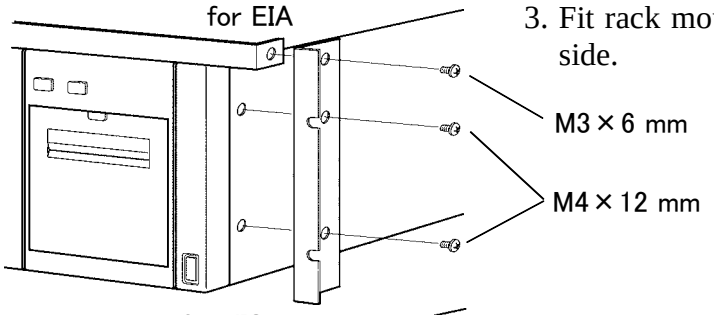

3. Fit rack mounting fixtures similarly on the other side.

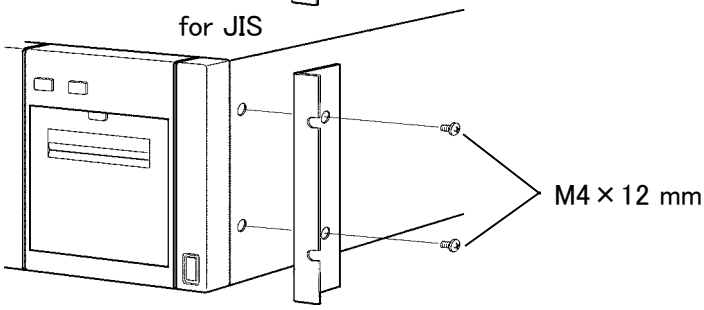

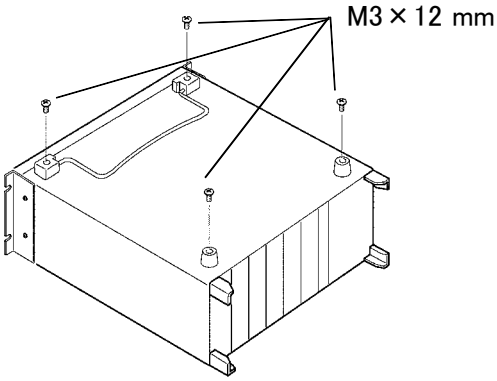

4. When using rack mounting, reinforce the rack with commercial available support angles

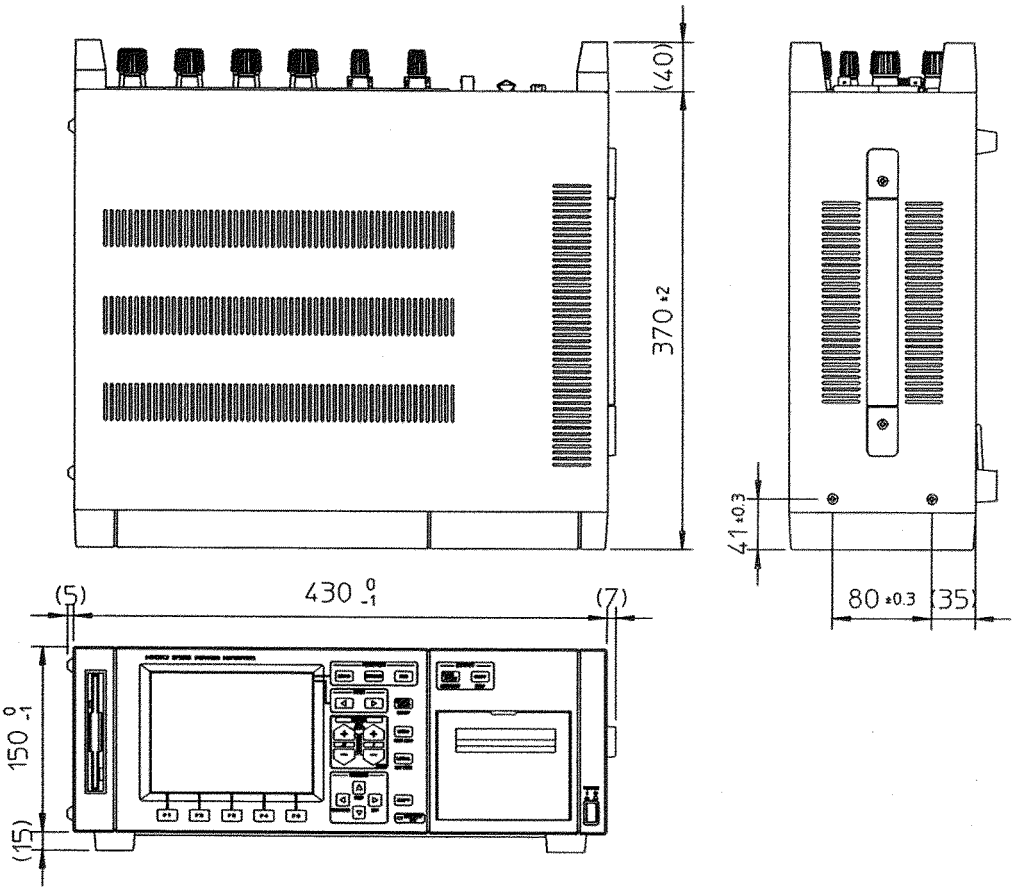

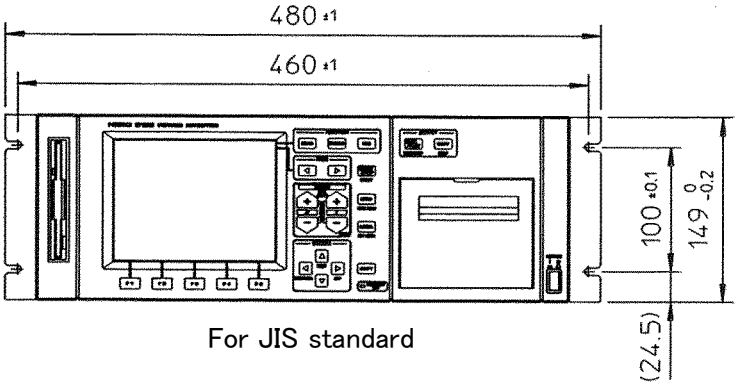

For JIS standard

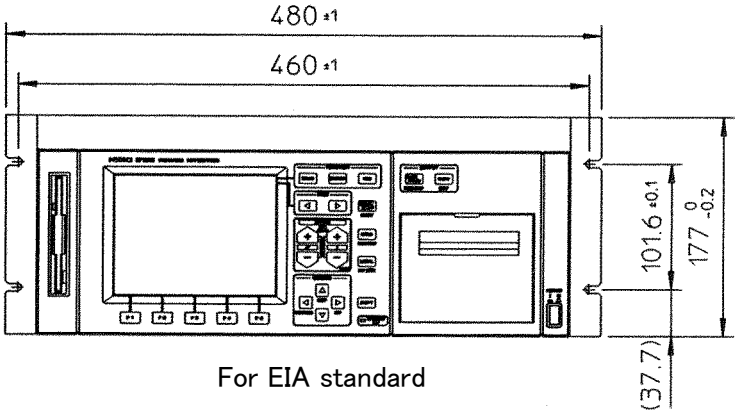

For EIA standard

External Dimensions

Chapter 20
Specifications (unit only)

⚠ **CAUTION** When including options, refer to the separate specifications of the options.

20.1 General Specifications

Location for use	Indoors, pollution level 2, altitude up to 2000 m (6562 feet)
Storage temperature and humidity range	-10°C to 50°C (-50 °F to 122 °F) 80% RH or less (no condensation)
Operating temperature and humidity range	Unit only: 0°C to 40°C (32 °F to 104 °F), 80% RH or less (no condensation) Using with FDD/printer: 5°C to 40°C (41 °F to 104 °F), 80% RH or less (no condensation)
Number of input units	6 channels maximum and external signal input unit 1 channel (two inputs)
Measurement lines	Single-phase, two-wire (1P2W) Single-phase, three-wire (1P3W) Three-phase, three-wire (3V3A, 3P3W) Three-phase, four-wire (3P4W) During installing same type input units for all channels:

<table>
<tr><th></th><th>1ch</th><th>2ch</th><th>3ch</th><th>4ch</th><th>5ch</th><th>6ch</th></tr>
<tr><td>①</td><td>1P2W</td><td>1P2W</td><td>1P2W</td><td>1P2W</td><td>1P2W</td><td>1P2W</td></tr>
<tr><td>②</td><td colspan="2">1P3W/3P3W</td><td>1P2W</td><td>1P2W</td><td>1P2W</td><td>1P2W</td></tr>
<tr><td>③</td><td colspan="2">1P3W/3P3W</td><td colspan="2">1P3W/3P3W</td><td>1P2W</td><td>1P2W</td></tr>
<tr><td>④</td><td colspan="2">1P3W/3P3W</td><td colspan="2">1P3W/3P3W</td><td colspan="2">1P3W/3P3W</td></tr>
<tr><td>⑤</td><td colspan="3">3V3A/3P4W</td><td>1P2W</td><td>1P2W</td><td>1P2W</td></tr>
<tr><td>⑥</td><td colspan="3">3V3A/3P4W</td><td colspan="2">1P3W/3P3W</td><td>1P2W</td></tr>
<tr><td>⑦</td><td colspan="3">3V3A/3P4W</td><td colspan="3">3V3A/3P4W</td></tr>
</table>

Measurement items	When using the optional units; 9600, 9601, 9602: Voltage (*U*), current (*I*), active power (*P*), apparent power (*S*), reactive power (*Q*), power factor (λ), phase angle (ϕ), frequency (*f*), current integration (*Ih*), power integration (*WP*), efficiency (η), load factor (*LF*) When using the optional unit; 9603: (input the analog output from the external device and set the scaling and units) Voltage (V), torque (N・m,mN・m,kN・m,kgf・m,kgf・cm), number of rotating (rpm), frequency (Hz), motor power (*P*m,*W*) When using the optional unit; 9605: Harmonic waveform (*U*,*I*,*P*), waveform (*U*,*I*), Voltage fluctuation/ flicker measurement function
Screen display	6.4-inch TFT color LCD (640×480 dots)
Display resolution	99999 counts (excluding integration) (0.0000p to 99999T) 9999999 counts (integration) (0 to 9999999T)
Display range	Depends on the specifications of the input unit combined
Display update rate	8 times/s max (when using the 9605, depends on the specifications of the 9605)
Analog output	*U*, *I*, *P* and *V*a, *V*b from each units (20 items max)
Monitor output	*U*, *I* from each units (12 items max)
External control	External A/D trigger (for display update during holding displays) Integration start and stop Integration reset For FDD/printer control (start) Control signal for the 9605
Control signal	Controlled by 0/5 V logic signal or open/short circuit
Real-time clock accuracy	±25 ppm ±1 second (25°C)
Dielectric strength	Using with the 9600 and 9601: 5.55 kV AC for 1 minute (sensitive current 1 mA) (between *U* and *I* input terminals and case, between *U* and *I* input terminals and power plug) Using with the 9602: 5.55 kV AC for 1 minute (sensitive current 1 mA) (between *U* input terminal and sensor input terminal, between *U* input terminal and case, between *U* input terminal and power plug)
Maximum rated voltage to earth	Using with the 9600 and 9601 Voltage input terminal, Current input terminal 600 V measurement category III (expected transient overvoltage: 6000 V) 1000 V measurement category II (expected transient overvoltage: 6000 V) Using with the 9602 Voltage input terminal 600 V measurement category III (expected transient overvoltage: 6000 V)
Rated supply voltage	100 V/ 120 V/ 200 V/ 230 V (auto-switching, account to 10%), 50/60 Hz (Voltage fluctuations of ±10% from the rated supply voltage are taken into account.) (anticipated transient overvoltage 2500 V)
Rated power	150 VA max
External dimensions	Approx.430W×150H×370D mm, 16.93"W×5.91"H×14.57"D (excluding protrusions)
Product warranty period	3 years
Mass	Approx.13 kg, 458.6 oz. (during installing the 9600 (6 channels), 9603, and 9604)
Accessories	Instruction manual Power cord Connector

Applicable standards		
	Safety	EN61010
	EMC	EN61326 ClassA Effect of radiated radio-frequency electromagnetic field: at 10 V/m within 50 mA (using with the 9600,9601 and 9602+9277) at 10 V/m within 1.7 A(using with the 9602+9278) Effect of conducted radio-frequency disturbances: at 3 V within 50 mA (using with the 9600,9601) EN61000-3-2 EN61000-3-3

20.2 Function Specifications

When using the 9605, see the specifications of the 9605.

1. Voltage, current, active power measurements (*U, I, P*) (when using the 9600, 9601, 9602)

Measurement type	Analog computation within the input unit of *U*, *I*, and *P* for each channel For 1P3W and above, the SUM value of *U*, *I*, and *P* is computed digitally in the main unit.
Accuracy	For SUM value, with respect to value computed measurement values (*U*, *I*, and *P* channels): *U*, *I* :±1dgt., *P:* ±3dgt. max.
Range	The range of the SUM value of *U* and *I* more than 1P3W is same as the range for each channels (for *P*, see elsewhere)

2. Waveform peak measurement (|*Up*|, |*Ip*|) (when using the 9600, 9601, 9602)

Measurement type	Analog peak hold circuit in the input unit (maximum of absolute value) (for each input unit, either voltage or current can be selected)
Accuracy	Determined by specification of each input unit

3. Apparent power, reactive power measurement (*S, Q*) (when using the 9600, 9601, 9602)

Measurement type	Digital computation from measurement values (*U*, *I*, and *P*) for each channels. Computation expression selectable from three variants (type1, type2, and type3). (See elsewhere)
Accuracy	±1dgt with respect to value computed measurement values (*U*, *I*, and *P* channels) SUM: maximum of ±3 dgt
Range	Same as active power (units: VA, var)
Effective input range	When the measurement values (*U*, *I*, and *P*) of the channels are within the valid input ranges
Polarity display	Apparent power: no polarity Reactive power: when the current leads voltage: "-", when the current lags voltage: unsigned For calculation (type 2, 3): no polarity

4. Power factor measurement (λ) (when using the 9600, 9601, 9602)

Measurement type	Calculated from the measured value (*U*, *I*, *P*) for each channel Formula is shown elsewhere. The accuracy in this case is a maximum of ±3 dgt. with respect to the value computed from the measurement values (*U*, *I*, and *P*).
Display range	0.0000 to ±1.0000
Polarity display	When the current leads the voltage: "-", when the current lags the voltage: unsigned For calculation (type 2, 3): no polarity

5. Phase angle measurement (∅) (when using the 9600, 9601, 9602)

Measurement type	Digital calculation from the measured value (*U*, *I*, *P*) for each channel For calculation (type 2, 3): no polarity see elsewhere
Accuracy	Maximum of ±3 dgt. with respect to the value computed from the measurement values (*U*, *I*, and *P*).
Display range	180.00 ° to -180.00 °
Polarity display	When the current leads the voltage: "-", when the current lags the voltage: unsigned For calculation (type 2, 3): no polarity

6. Input function of analog output from external unit (when using the 9603)

① DC voltage measurement	
Measurement type	The DC voltage value measured on the 9603 is subjected to scaling, and displayed with the unit indication added. chA, chB (when analog setting)
Accuracy	According to the specifications of the 9603
Display range	0.1 to 130% of voltage range of the 9603, no polarity
Scaling value	0.0001 to 99999
Unit setting	Voltage: V Torque: N・m, mN・m, kN・m, kgf・m Rotation speed: rpm
② Pulse measurement	
Measurement type	Pulses input to channel B of the 9603 (when the pulse setting is selected) are counted by the 3193 frequency measurement function (channel fc) and displayed.
Accuracy	Same as accuracy of frequency measurement function of the 3193
Display range	Same as display range of frequency measurement function of the 3193
Unit setting	Frequency: Hz Rotation speed: rpm
Pulse	1 to 99999 (unit: rpm) (Number of output pulses per rotation of the motor)
Calculation	When unit is rpm: $\text{Number of rotation} = \dfrac{60 \times \text{measurement frequency}}{\text{Number of pulse}}$

③ Motor power (*P*m measurement)	
Measurement type	Digital computation from the measured voltage or pulse signal. In the case that the 9603 channel A unit is torque and channel B unit is rotation count/rate.
Accuracy	±1dgt. with respect to the value computed from the measurement values
Display range	0.1 to 130% of setting voltage range when both channel A and B is set to DC voltage measurement 0 to 100% of using frequency measurement range when channel B is set to pulse measurement.
Unit indication	W
Calculation	The calculation is carried out as follows, depending on the torque units set for channel A.

Unit of chA	Motor power calculations (W)
N·m	$(\text{Display value of chA}) \times \dfrac{2 \times \pi \times (\text{display value of chB})}{60}$
mN·m	$(\text{Display value of chA}) \times \dfrac{2 \times \pi \times (\text{display value of chB})}{60 \times 100}$
kN·m	$(\text{Display value of chA}) \times \dfrac{2 \times \pi \times (\text{display value of chB}) \times 1000}{60}$
kgf·m	$(\text{Display value of chA}) \times \dfrac{2 \times \pi \times (\text{display value of chB}) \times 9.80665}{60}$
kgf·cm	$(\text{Display value of chA}) \times \dfrac{2 \times \pi \times (\text{display value of chB}) \times 9.80665}{60 \times 100}$

7. Frequency measurement (*f*a, *f*b, *f*c) (when using the 9600, 9601, 9602)

Measurement type	Reciprocal calculation from frequency of input waveform
Number of measurement channel	3 channels
Display range	AUTO/ 50 Hz/ 500 Hz/ 5 kHz/ 50 kHz/ 2 MHz
Resolution	99999 counts
Measurement range	500.00 mHz to 50.000 Hz/ 20.000 Hz to 500.00 Hz/ 200.00 Hz to 5.0000 kHz/ 2.0000 kHz to 50.000 kHz/ 20.000 kHz to 2.0000 MHz
Measurement accuracy	±0.1% rdg.±1dgt. With a sine wave input from 10% to 130% of the *U*/*I* ranges, when the frequency characteristics of the input unit forming the source are within the specified range
Function	Switching *U*/*I* source (Simultaneous *U*/*I* input from a single input unit is not possible.) Filter switching linked to range (high-pass or low-pass filter) Pulse measurement when 9603 is used When the 9303 is set to pulse measurement, fc is forced to pulse measurement of channel B.

8. Integration measurement (current integration *Ih*, power integration *WP*)

Measurement type	Digital calculation from the measured value of *I*, *P*
Accuracy	±1dgt. with respect to the value computed from the measurement value for each channel (*I*, *P*)
Number of measurement	64 times/s
Measurement item	Integration of current and active power for all channels is possible The following items depends on settings 1P2W, DC mode: *+Ih*, *-Ih*, *Ih*, *+WP*, *-WP*, *WP* 1P2W, excluding above: *Ih*, *+WP*, *-WP*, *WP* 1P3W or more: Ih for each channels, *+WP*, *-WP*, *WP* of SUM value for active power
Measurement range	0 to ±9999999TAh/TWh (when integration time is within 10,000 hours)
Effective input range	Same as effective input range of each input units
Integration time accuracy	±25ppm±1dgt. (0°C to 40°C)
Function	Separate integration for each polarity (positive, negative, and total) Integration for various control times Automatic output to FDD/printer Display of integration elapsed time Cumulative integration by repeated start/stop operations Start/stop/reset by external control (Simultaneous control of selected channels; independent control not possible) Back-up of the integration value and integration elapsed time during power failure Restart of integration after restoring power failure

9. Load factor measurement function (*LF*)

Calculation	Digital calculation from the positive integration value of active power (only when the interval time is set)
Accuracy	Same as integration measurement
Number of calculation	Same as integration measurement
Measurement range	0.00 to 100.00%
Calculation	$\text{Load factor } (LF) = \frac{Wav}{Wmax} \times 100\%$ *W*av : Total averaging *W*max : Maximum value of averaging for interval $Wav = \frac{\text{Total integration value (+)}}{\text{Timer time or real-time control time}}$ $Wmax = \frac{\text{Maximum value of integration value for interval}}{\text{Interval time}}$

10. Efficiency calculation function（η1/η2/η3）

Calculation item	Active power (*P*) for each input units or motor power (*P*m) when using with the 9603
Calculation	
Calculation accuracy	For computed values of measurement values with items replaced, maximum ±7 dgt.
Number of calculation	3 max
Calculation	Specified format: $\eta = \frac{(\ ) + (\ ) + (\ ) + (\ )}{(\ ) + (\ ) + (\ ) + (\ )} \times 100$

11. D/A output (standard installation)

Configuration	12 bits D/A convertor (polarity +11 bits), 8 channels
Output accuracy	Measurement accuracy±0.2%f.s. (Guaranteed accuracy period: six months)
Temperature coefficiency	±0.05%f.s./°C
Output update rate	16 times/s
Output voltage	±5 V DC f.s.
Outputs	8 items which is selected arbitrary (excluding measurement items of the 9605)
Output resistance	100 Ω±5%

12. FDD (only 3193)

Supported media	3.5-inch 2HD (1.2 MB/1.44MB)
Format	MS-DOS ("MS-DOS" is a trademark of Microsoft Corporation).
Saving function	Saves the settings and selected items of the unit
Loading function	Loads the list of file name on the floppy disk and settings of the unit
Data file name	Up to eight alphanumeric characters (normal width)
Other functions	Auto-save by time settings Formats a floppy disk Saving by external trigger Supported version-up of the function of the unit

13. External interface

GP-IB	IEEE-488.1 1987 compliance, IEEE-488.2 1987 reference SH1,AH1,T6,L4,SR1,RL1,PP0,DC1,DT1,C0 address (00 to 30)
RS-232C	Start-stop synchronization Baud rate: 2400, 9600bit/s Data length: 7, 8 Parity checking: Even, odd, off Stop bit length: 1, 2 Flow control: None, XON/XOFF, hard flow

14. Other functions

Coupling mode switching	DC/ AC+DC/ AC DC or AC+DC mode cannot be used when using the 9601 or when using the 9602 with the AC current sensor
Rectifier type switching	RMS/ MEAN In DC coupling mode, switching is not possible
Response switching	FAST/MID/SLOW
LPF switching	OFF/ 500 Hz/ 5 kHz/ 300 kHz (for the specifications, according to each unit) For the 9601, OFF/500 Hz selection
Polarization detection stabilization filter	OFF/ 200 Hz It is effective when the calculation (type1) is selected.
Scaling	Displays (PT ratio, CT ratio, SC constant)×measurement value Constant value: ".0001" to "10000"
Hold function	Pressing the HOLD key stops updating the all measurement value display Updates by pressing the key Operation by time setting Display update by external control
Peak hold function	In the peak hold state, the maximum value is updated from that point
Time settings	Interval time (10 seconds to 100 hours) 10 second step When using with the FDD or printer, depending on the number of output times, minimum interval time is automatically changed. Timer control (1 minute to 10000 hours) 1 minute step Real time control 1 minute
Averaging	Time averaging (averaged by interval time, timer, real time control which has been set) Moving averaging (number of sampling: 8/16/32/64) Exponential averaging (Attenuation constant 8/16/32/64)
Real time display	Displays year/month/day/hours (24-hour)/ minutes/seconds accuracy: ±25 ppm±1 second (25°C)
Battery back-up	Backup the settings and integration data When the power failure occurs during averaging, integration, or printing, restarts after restoring power failure. Battery life 10 years or more (at 25°C reference value)

20.3 Calculations

1. Voltage (U), Current (I), Active power (P)

		Voltage (U)	Current (I)	Active power (P)
1P2W		$U_{(i)}$	$I_{(i)}$	$P_{(i)}$
SUM	1P3W	$U_{(i)(i+1)} = \frac{U_{(i)}+U_{(i+1)}}{2}$	$I_{(i)(i+1)} = \frac{I_{(i)}+I_{(i+1)}}{2}$	$P_{(i)(i+1)} = P_{(i)}+P_{(i+1)}$
	3P3W	$U_{(i)(i+1)} = \frac{U_{(i)}+U_{(i+1)}}{2}$	$I_{(i)(i+1)} = \frac{I_{(i)}+I_{(i+1)}}{2}$	$P_{(i)(i+1)} = P_{(i)}+P_{(i+1)}$
	3V3A	$U_{(i)(i+1)(i+2)} = \frac{U_{(i)}+U_{(i+1)}+U_{(i+2)}}{3}$	$I_{(i)(i+1)(i+2)} = \frac{I_{(i)}+I_{(i+1)}+I_{(i+2)}}{3}$	$P_{(i)(i+1)(i+2)} = P_{(i)}+P_{(i+1)}$
	3P4W	$U_{(i)(i+1)(1+2)} = \frac{U_{(i)}+U_{(i+1)}+U_{(i+2)}}{3}$	$I_{(i)(i+1)(i+2)} = \frac{I_{(i)}+I_{(i+1)}+I_{(i+2)}}{3}$	$P_{(i)(i+1)(i+2)} = P_{(i)}+P_{(i+1)}+P_{(i+2)}$

2. Power factor (λ), Phase angle (ϕ)

		Power factor (λ)	Phase angle (ϕ)
1P2W		$\lambda_{(i)} = s_{(i)} \left\lvert \frac{P_{(i)}}{S_{(i)}} \right\rvert$	$\phi_{(i)} = s_{(i)}\mathrm{COS}^{-1}\lvert \lambda_{(i)} \rvert$
SUM	1P3W	$\lambda_{(i)(i+1)} = su \left\lvert \frac{P_{(i)(i+1)}}{S_{(i)(i+1)}} \right\rvert$	$\phi_{(i)(i+1)} = su\mathrm{COS}^{-1}\lvert \lambda_{(i)(i+1)} \rvert$
	3P3W	$\lambda_{(i)(i+1)} = su \left\lvert \frac{P_{(i)(i+1)}}{S_{(i)(i+1)}} \right\rvert$	$\phi_{(i)(i+1)} = su\mathrm{COS}^{-1}\lvert \lambda_{(i)(i+1)} \rvert$
	3V3A	$\lambda_{(i)(i+1)(i+2)} = su \left\lvert \frac{P_{(i)(i+1)(i+2)}}{S_{(i)(i+1)(i+2)}} \right\rvert$	$\phi_{(i)(i+1)(i+2)} = su\mathrm{COS}^{-1}\lvert \lambda_{(i)(i+1)(i+2)} \rvert$
	3P4W	$\lambda_{(i)(i+1)(i+2)} = su \left\lvert \frac{P_{(i)(i+1)(i+2)}}{S_{(i)(i+1)(i+2)}} \right\rvert$	$\phi_{(i)(i+1)(i+2)} = su\mathrm{COS}^{-1}\lvert \lambda_{(i)(i+1)(i+2)} \rvert$

3. Apparent power (S), Reactive power (Q)

Type 1

		Apparent power (S)	Reactive power (Q)
1P2W		$S_{(i)} = U_{(i)}I_{(i)}$	$Q_{(i)} = s_{(i)} \sqrt{(U_{(i)}I_{(i)})^2 - P_{(i)}^2}$
SUM	1P3W	$S_{(i)(i+1)} = U_{(i)}I_{(i)} + U_{(i+1)}I_{(i+1)}$	$Q_{(i)(i+1)} = s_{(i)} \sqrt{(U_{(i)}I_{(i)})^2 - P_{(i)}^2} + s_{(i+1)} \sqrt{(U_{(i+1)}I_{(i+1)})^2 - P_{(i+1)}^2}$
	3P3W	$S_{(i)(i+1)} = \frac{\sqrt{3}}{2}(U_{(i)}I_{(i)} + U_{(i+1)}I_{(i+1)})$	$Q_{(i)(i+1)} = s_{(i)} \sqrt{(U_{(i)}I_{(i)})^2 - P_{(i)}^2} + s_{(i+1)} \sqrt{(U_{(i+1)}I_{(i+1)})^2 - P_{(i+1)}^2}$
	3V3A	$S_{(i)(i+1)(i+2)} = \frac{\sqrt{3}}{3}(U_{(i)}I_{(i)} + U_{(i+1)}I_{(i+1)} + U_{(i+2)}I_{(i+2)})$	$Q_{(i)(i+1)(i+2)} = s_{(i)} \sqrt{(U_{(i)}I_{(i)})^2 - P_{(i)}^2} + s_{(i+1)} \sqrt{(U_{(i+1)}I_{(i+1)})^2 - P_{(i+1)}^2}$
	3P4W	$S_{(i)(i+1)(i+2)} = U_{(i)}I_{(i)} + U_{(i+1)}I_{(i+1)} + U_{(i+2)}I_{(i+2)}$	$Q_{(i)(i+1)(i+2)} = s_{(i)} \sqrt{(U_{(i)}I_{(i)})^2 - P_{(i)}^2} + s_{(i+1)} \sqrt{(U_{(i+1)}I_{(i+1)})^2 - P_{(i+1)}^2} + s_{(i+2)} \sqrt{(U_{(i+2)}I_{(i+2)})^2 - P_{(i+2)}^2}$

Type 2

		Apparent power (S)	Reactive power (Q)
1P2W		$S_{(i)} = U_{(i)}I_{(i)}$	$Q_{(i)} = \sqrt{(U_{(i)}I_{(i)})^2 - P_{(i)}^2}$
SUM	1P3W	$S_{(i)(i+1)} = U_{(i)}I_{(i)} + U_{(i+1)}I_{(i+1)}$	$Q_{(i)(i+1)} = \sqrt{(U_{(i)}I_{(i)} + U_{(i+1)}I_{(i+1)})^2 - (P_{(i)} + P_{(i+1)})^2}$
	3P3W	$S_{(i)(i+1)} = \frac{\sqrt{3}}{2}(U_{(i)}I_{(i)} + U_{(i+1)}I_{(i+1)})$	$Q_{(i)(i+1)} = \sqrt{[\frac{\sqrt{3}}{2}(U_{(i)}I_{(i)} + U_{(i+1)}I_{(i+1)})]^2 - (P_{(i)} + P_{(i+1)})^2}$
	3V3A	$S_{(i)(i+1)(i+2)} = \frac{\sqrt{3}}{3}(U_{(i)}I_{(i)} + U_{(i+1)}I_{(i+1)} + U_{(i+2)}I_{(i+2)})$	$Q_{(i)(i+1)(i+2)} = \sqrt{[\frac{\sqrt{3}}{3}(U_{(i)}I_{(i)} + U_{(i+1)}I_{(i+1)} + U_{(i+2)}I_{(i+2)})]^2 - (P_{(i)} + P_{(i+1)})^2}$
	3P4W	$S_{(i)(i+1)(i+2)} = U_{(i)}I_{(i)} + U_{(i+1)}I_{(i+1)} + U_{(i+2)}I_{(i+2)}$	$Q_{(i)(i+1)(i+2)} = \sqrt{(U_{(i)}I_{(i)} + U_{(i+1)}I_{(i+1)} + U_{(i+2)}I_{(i+2)})^2 - (P_{(i)} + P_{(i+1)} + P_{(i+2)})^2}$

Type 3

		Apparent power (S)	Reactive power (Q)
1P2W		$S_{(i)} = U_{(i)}I_{(i)}$	$Q_{(i)} = \sqrt{(U_{(i)}I_{(i)})^2 - P_{(i)}^2}$
SUM	1P3W	$S_{(i)(i+1)} = 2 \times \frac{U_{(i)} + U_{(i+1)}}{2} \times \frac{I_{(i)} + I_{(i+1)}}{2}$	$Q_{(i)(i+1)} = \sqrt{(2 \times \frac{U_{(i)} + U_{(i+1)}}{2} \times \frac{I_{(i)} + I_{(i+1)}}{2})^2 - (P_{(i)} + P_{(i+1)})^2}$
	3P3W	$S_{(i)(i+1)} = \sqrt{3} \times \frac{U_{(i)} + U_{(i+1)}}{2} \times \frac{I_{(i)} + I_{(i+1)}}{2}$	$Q_{(i)(i+1)} = \sqrt{(\sqrt{3} \times \frac{U_{(i)} + U_{(i+1)}}{2} \times \frac{I_{(i)} + I_{(i+1)}}{2})^2 - (P_{(i)} + P_{(i+1)})^2}$
	3V3A	$S_{(i)(i+1)(i+2)} = \sqrt{3} \times \frac{U_{(i)} + U_{(i+1)} + U_{(i+2)}}{3} \times \frac{I_{(i)} + I_{(i+1)} + I_{(i+2)}}{3}$	$Q_{(i)(i+1)(i+2)} = \sqrt{(\sqrt{3} \times \frac{U_{(i)} + U_{(i+1)} + U_{(i+2)}}{3} \times \frac{I_{(i)} + I_{(i+1)} + I_{(i+2)}}{3})^2 - (P_{(i)} + P_{(i+1)})^2}$
	3P4W	$S_{(i)(i+1)(i+2)} = \sqrt{3} \times \frac{U_{(i)} + U_{(i+1)} + U_{(i+2)}}{3} \times \frac{I_{(i)} + I_{(i+1)} + I_{(i+2)}}{3}$	$Q_{(i)(i+1)(i+2)} = \sqrt{(3 \times \frac{U_{(i)} + U_{(i+1)} + U_{(i+2)}}{3} \times \frac{I_{(i)} + I_{(i+1)} + I_{(i+2)}}{3})^2 - (P_{(i)} + P_{(i+1)} + P_{(i+2)})^2}$

- The suffixes (i), (i+1), and (i+2) on the items indicate the channel numbers being used. For example, when measuring with channels 1 and 2 in 3P3W mode, the voltages on the channels are indicated as "*U*1" and "*U*2", and the SUM value as "*U*12."
- *U*(i), *I*(i), and *P*(i) for each channel are found by analog computation.
- Values other than *U*(i), *I*(i), and *P*(i) are found by digital computation from the measurement values *U*(i), *I*(i), and *P*(i), excluding the rounding error of ±1 dgt. in the displayed values.
  The accuracy in this case is ±1 dgt. with respect to the value computed from the measurement values, and ±3 dgt. for a SUM value.
- The power factor and phase angle are computed from whichever of the apparent power or reactive power expression is selected, and the values may not always agree.
- The lower-case "$s_{(i)}$" at the beginning of the expressions for power factor and phase angle indicates whether the current phase leads or lags the voltage.
  A "-" indicates that the current leads the voltage, and an unsigned quantity that the current lags the voltage. The "su" indication is "-" when the SUM value of the reactive power is negative, and "+" (but shown as unsigned) when positive.
  When type2 or type3 is selected for the expression for calculating the apparent power and reactive power, the lead or lag polarity is not shown.
- When under the influence of the measurement inaccuracy or an unbalanced load $S < |P|$, the calculation is adjusted so that $S = |P|$, $Q = 0$, $\lambda = 1$, and $\phi = 0$.
- In the DC mode, P is measured as the sum of AC and DC values, and therefore it may be the case that $S < |P|$.
- When calculation "TYPE1" is selected and averaging (time averaging/ sliding averaging/ exponential averaging) is carried out, the polarity "si" and "su" for each channel are calculated as "+1".

4. Power range
4.1 1P2W
unit: W
9600, 9601 DIRECT INPUT UNIT (9601 does not have 6 V, 15 V, 30 V ranges)

U (V) \ *I* (A)	200.0 m	500.00 m	1.0000	2.0000	5.0000	10.000	20.000	50.000
6.0000	1.2000	3.0000	6.0000	12.000	30.000	60.000	120.00	300.00
15.000	3.0000	7.5000	15.000	30.000	75.000	150.00	300.00	750.00
30.000	6.0000	15.000	30.000	60.000	150.00	300.00	600.00	1.5000 k
60.000	12.000	30.000	60.000	120.00	300.00	600.00	1.2000 k	3.0000 k
150.00	30.000	75.000	150.00	300.00	750.00	1.5000 k	3.0000 k	7.5000 k
300.00	60.000	150.00	300.00	600.00	1.5000 k	3.0000 k	6.0000 k	15.000 k
600.00	120.00	300.00	600.00	1.2000 k	3.0000 k	6.0000 k	12.000 k	30.000 k
1000.0	200.00	500.00	1.0000 k	2.0000 k	5.0000 k	10.000 k	20.000 k	50.000 k

9602 + 20 A sensor (9277, 9270, 9272, 9272-10: 20 A range)

U (V) \ *I* (A)	500.00 m	1.0000	2.0000	5.0000	10.000	20.000
6.0000	3.0000	6.0000	12.000	30.000	60.000	120.00
15.000	7.5000	15.000	30.000	75.000	150.00	300.00
30.000	15.000	30.000	60.000	150.00	300.00	600.00
60.000	30.000	60.000	120.00	300.00	600.00	1.2000 k
150.00	75.000	150.00	300.00	750.00	1.5000 k	3.0000 k
300.00	150.00	300.00	600.00	1.5000 k	3.0000 k	6.0000 k
600.00	300.00	600.00	1.2000k	3.0000 k	6.0000 k	12.000 k

9602 + 50 A sensor (CT6862), CT ratio=2.5 only
(For other CT ratio settings, please see the ranges of 9602 + 20A sensor.)

U (V) \ *I* (A)	1.2500	2.5000	5.0000	12.500	25.000	50.000
6.0000	7.5000	15.000	30.000	75.000	150.00	300.00
15.000	18.750	37.500	75.000	187.50	375.00	750.00
30.000	37.500	75.000	150.00	375.00	750.00	1.5000 k
60.000	75.000	150.00	300.00	750.00	1.5000 k	3.0000 k
150.00	187.50	375.00	750.00	1.8750 k	3.7500 k	7.5000 k
300.00	375.00	750.00	1.5000 k	3.7500 k	7.5000 k	15.000 k
600.00	750.00	1.5000 k	3.0000 k	7.5000 k	15.000 k	30.000 k

9602 + 200 A sensor (9278, CT6863, 9271, 9272, 9272-10: 200 A ranges)

U (V) \ I (A)	5.0000	10.000	20.000	50.000	100.00	200.00
6.0000	30.000	60.000	120.00	300.00	600.00	12.000 k
15.000	75.000	150.00	300.00	750.00	1.5000 k	30.000 k
30.000	150.00	300.00	750.00	1.5000 k	3.0000 k	60.000 k
60.000	300.00	600.00	1.5000 k	3.0000 k	6.0000 k	12.000 k
150.00	750.00	1.5000 k	3.0000 k	7.5000 k	15.000 k	30.000 k
300.00	1.5000 k	3.0000 k	6.0000 k	15.000 k	30.000 k	60.000 k
600.00	3.0000 k	6.0000 k	12.000 k	30.000 k	60.000 k	120.00 k

9602 + 500 A sonsor (9279, 9709)

U (V) \ I (A)	10.000	20.000	50.000	100.00	200.00	500.00
6.0000	60.000	120.00	300.00	600.00	1.2000 k	3.0000 k
15.000	150.000	300.00	750.00	1.5000 k	3.0000 k	7.5000 k
30.000	300.00	600.00	1.5000 k	3.0000 k	6.0000 k	15.000 k
60.000	600.00	1.2000 k	3.0000 k	6.0000 k	12.000 k	30.000 k
150.00	1.5000 k	3.0000 k	7.5000 k	15.000 k	30.000 k	75.0000 k
300.00	3.0000 k	6.0000 k	15.000 k	30.000 k	60.000 k	150.00 k
600.00	6.0000 k	12.000 k	30.000 k	60.000 k	120.00 k	300.00 k

9602 + 1000 A sonsor (CT6865) CT ratio=2 only

U (V) \ I (A)	20.000 (10.000)	40.000 (20.000)	100.00 (50.000)	200.00 (100.00)	400.00 (200.00)	1000.0 (500.00)
6.0000	120.00	240.00	600.00	1.2000 k	2.4000 k	6.0000 k
15.000	300.00	600.00	1.5000 k	3.0000 k	6.0000 k	15.000 k
30.000	600.00	1.2000 k	3.0000 k	6.0000 k	12.000 k	30.000 k
60.000	1.2000 k	2.4000 k	6.0000 k	12.000 k	24.000 k	60.000 k
150.00	3.0000 k	6.0000 k	15.000 k	30.000 kl	60.000 k	150.00 k
300.00	6.0000 k	12.000 k	30.000 k	60.000 k	120.00 k	300.00 k
600.00	12.000 k	24.000 k	60.000 k	120.00 k	240.00 k	600.00 k

1. The range configuration of apparent power (S) and reactive power (Q) are same as above. Units are "VA", "var".
2. When PT, CT and SC ratios are set, the range is multiplied by (PT ratio × CT ratio × SC ratio).
3. Power ranges other than 1P2W are shown below.

	Power range excluding 1P2W
1P3W	(Single-phase power range) × 2
3P3W	(Single-phase power range) × 2
3V3A	(Single-phase power range) × 2
3P4W	(Single-phase power range) × 3

20.4 Internal Block Diagram of the 3193

The internal construction of the HIOKI 3193 is shown below. The broken lines indicate options.
When the optional input units (9600, 9601, and 9602) are used, the voltage (*U*), current (*I*), and active power (*P*) are converted to DC voltages by analog computation in the input unit, and the waveform peak value is detected by an analog peak hold function. Each of these DC voltages is converted to a 16-bit digital value by an A/D converter in the input unit, and transferred to the 3193 proper. The 3193 computes from these input values the reactive power (*Q*), apparent power (*S*), power factor (λ), phase angle (ϕ), current integration value (*Ih*), active power integration value (*WP*), load factor (*LF*), and efficiency (η). The same process of conversion to a DC voltage, transfer to the 3193 proper, and computation, occurs also for the optional 9603.
For the optional 9605, the harmonics and flicker value are calculated by a DSP within the 9605, and these results are displayed on the main unit.

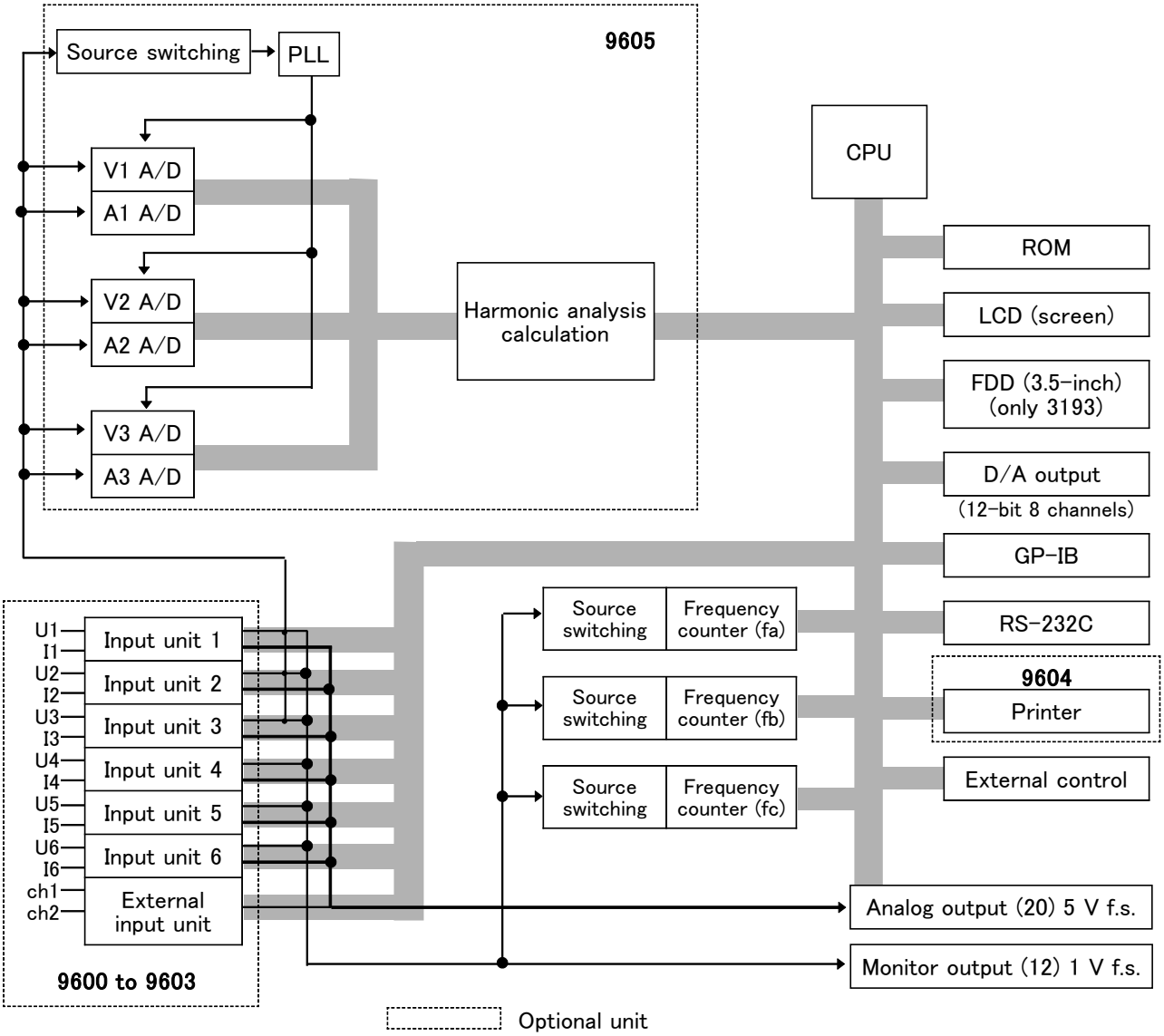

Appendix

3P3W wiring

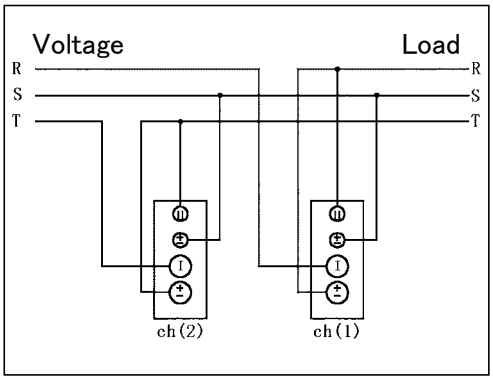

Diagram for the example using the option 9605

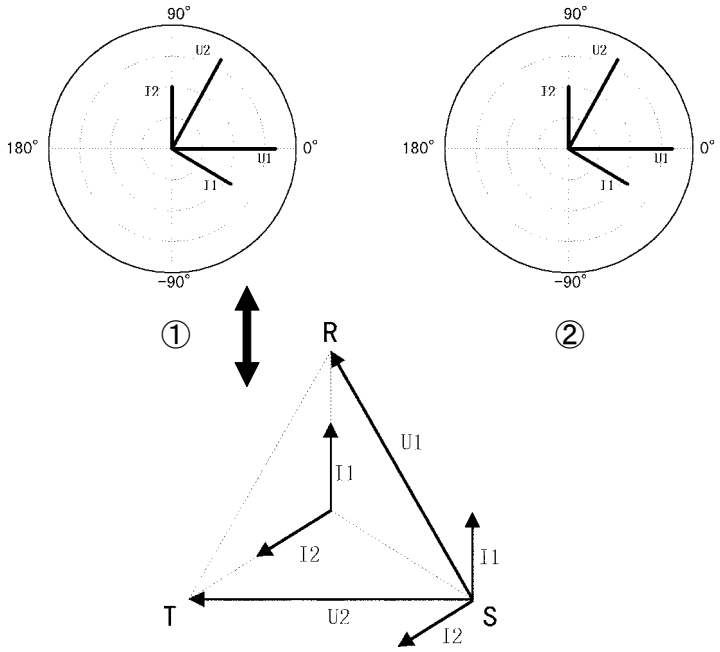

① Voltage is measured between lines and current is measured with phase, so U2 is phased 60 ° from U1. When the load is purely resistive, I1 lags U1 by 30 ° , and I2 leads U2 by 30 ° .

② With an inductive load such as a motor, when the effective power of ch1 is negative, the phase of I1 lags U1 by more than 90 ° .

3V3A wiring

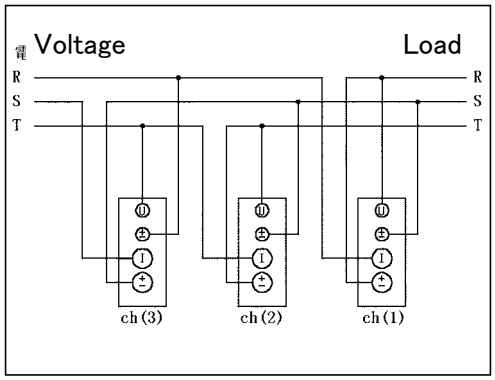

Diagram for the example using the option 9605

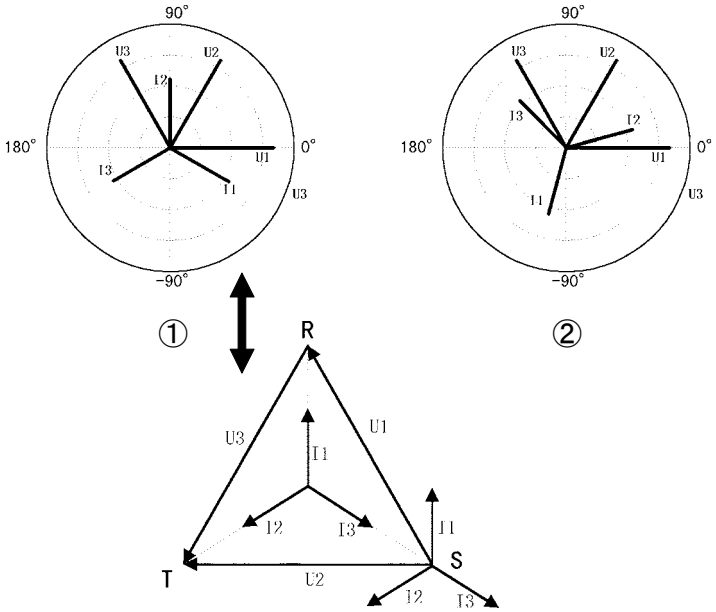

① Based on 3P3W wiring, the three channels of voltage and current are summed. The figures above show the state when the load is purely resistive.

② With an inductive load such as a motor
The effective power of ch1 appears negative because I1 lags U1 by more than 90 ° . However, the summed data for ch(3) is not related to power measurement, so wiring can be reversed.

Index

- A -

Active power 239
Analog outputs 7,85-87
Apparent power 54
Auto range 38,147, 163, 164, 193, 194

- B -

Backlight 5,53,143,144
Battery (battery life,disposing) 262, 275
Baud rate 111
Beep sound 55,144

- C -

Calculation 81,257,276-274
Clock 56,146
Command execution times 210
Command reference 130
Command syntax 115
Compound commands 118
Connection methods 24-27
Coupling mode 36,147
Crest factor 240
CT 24,25,40,184,185
Current input terminal 7,233,241
Current path 118
Current range 37,147-149
Current sensor 248

- D -

D/A output 7,85-87,91-93,141
Data formats 117
Data length 111
Degaussing 57,156
Device compliance statement 217
Display item 50,51,157,159,160
Disposing of the unit 262

- E -

Efficiency 79-84,144-146, 150, 151, 158, 172
English 56,169,170
Enlarged display 10,159
Error indications 108,231
Error message 28
Event registers 122
Explanation for keys 6
Exponential averaging 46,142
Extension 95
External control terminals 7,85
External dimensions 266

- F -

FDD 5,89, 95, 96, 99, 149-153, 225
FDD screen 16
File name 95,100,106
Floppy disk 95-98,107
Flow control 112,113
Format 95,98,117
Frequency 59-61,151,152,163-165,173
Front panel 5
Fuse 261

- G -

GP-IB 7,52,110,129
Ground terminal 7

- H -

Hardware handshake 111
Headers 115,166
Help 229
Hold 63,64,89,166

- I -

Initialization 211
Input buffer 111,119
Inspection i
Integration screen 72
Interface 52,109,114,219
Interface functions 110
Internal block diagram 238,246,252,259,281
Interval 69,76,168,169
Inverter 83,84

- K -

Key lock 169

- L -

Load factor 77,153,175
Long form 115
Low-pass filter 42,170

- M -

MEAN 39,148,194,239
Manual integration 74
Manual printing 181,227
Measurement losses 27
Measurement screen 9–12,50
Message terminators 116
Messages 108,114
Monitor outputs 7,85–87
Motor 84,257

- O -

Output queue 119
Output rate 93

- P -

PT 24,25,40
Peak hold 65,240
Peak over 18,37
Phase polarity discrimination filter (phF) 43,180
Power failure 30
Power ranges 279
Power switch 5
Printer 89,99,149–150,221
Printout 226,227
Pulse input 158,256,257

- R -

RS-232C 7,52,111,182,216,220
Rack Mounting 263–265
Reactive power 54,170,171,280
Real time 71,76,146,188,189
Rear panel 7
Recording paper 224
Rectifier 39,148,194
Remaining space 105
Response 45,181
RMS 39,148,194,238

- S -

Safety standard iii
Safety symbol iii
Sample program 215
Scaling 40,161,162,184,256
Screen 8–16,18,157–161
Screen hard copy 103,229
Selection screen 11,51
Self test 23,140
Separator 116,192
Setting screen 13–15
Short form 115
Specific command tree 212–214

Specific commands 198,205
Specification 110,222,235,243,249,258,267,270
Standard command 131
Status byte registers 121,131
Status model 120
Status screen 13–15
Stop bits 111
System reset 29

- T -

Time averaging 46,142
Timer 70,75,190,191

- U -

Unit setting 162,256

- V -

Voltage input terminal 7,233,241,247
Voltage range 37,161,193–195

- W -

Warming up vii
Waveform peak value 44,240
Wiring mode 33,179

- X -

XON/XOFF 111–113

Warranty Certificate

HIOKI

Model	Serial number	Warranty period Three (3) years from date of purchase (___ / ___)

Customer name: _____

Customer address: _____

Important

- Please retain this warranty certificate. Duplicates cannot be reissued.
- Complete the certificate with the model number, serial number, and date of purchase, along with your name and address. The personal information you provide on this form will only be used to provide repair service and information about Hioki products and services.

This document certifies that the product has been inspected and verified to conform to Hioki's standards.
Please contact the place of purchase in the event of a malfunction and provide this document, in which case Hioki will repair or replace the product subject to the warranty terms described below.

Warranty terms

1. The product is guaranteed to operate properly during the warranty period (three [3] years from the date of purchase). If the date of purchase is unknown, the warranty period is defined as three (3) years from the date (month and year) of manufacture (as indicated by the first four digits of the serial number in YYMM format).
2. If the product came with an AC adapter, the adapter is warrantied for one (1) year from the date of purchase.
3. The accuracy of measured values and other data generated by the product is guaranteed as described in the product specifications.
4. In the event that the product or AC adapter malfunctions during its respective warranty period due to a defect of workmanship or materials, Hioki will repair or replace the product or AC adapter free of charge.
5. The following malfunctions and issues are not covered by the warranty and as such are not subject to free repair or replacement:
   - 1. Malfunctions or damage of consumables, parts with a defined service life, etc.
   - 2. Malfunctions or damage of connectors, cables, etc.
   - 3. Malfunctions or damage caused by shipment, dropping, relocation, etc., after purchase of the product
   - 4. Malfunctions or damage caused by inappropriate handling that violates information found in the instruction manual or on precautionary labeling on the product itself
   - 5. Malfunctions or damage caused by a failure to perform maintenance or inspections as required by law or recommended in the instruction manual
   - 6. Malfunctions or damage caused by fire, storms or flooding, earthquakes, lightning, power anomalies (involving voltage, frequency, etc.), war or unrest, contamination with radiation, or other acts of God
   - 7. Damage that is limited to the product's appearance (cosmetic blemishes, deformation of enclosure shape, fading of color, etc.)
   - 8. Other malfunctions or damage for which Hioki is not responsible
6. The warranty will be considered invalidated in the following circumstances, in which case Hioki will be unable to perform service such as repair or calibration:
   - 1. If the product has been repaired or modified by a company, entity, or individual other than Hioki
   - 2. If the product has been embedded in another piece of equipment for use in a special application (aerospace, nuclear power, medical use, vehicle control, etc.) without Hioki's having received prior notice
7. If you experience a loss caused by use of the product and Hioki determines that it is responsible for the underlying issue, Hioki will provide compensation in an amount not to exceed the purchase price, with the following exceptions:
   - 1. Secondary damage arising from damage to a measured device or component that was caused by use of the product
   - 2. Damage arising from measurement results provided by the product
   - 3. Damage to a device other than the product that was sustained when connecting the device to the product (including via network connections)
8. Hioki reserves the right to decline to perform repair, calibration, or other service for products for which a certain amount of time has passed since their manufacture, products whose parts have been discontinued, and products that cannot be repaired due to unforeseen circumstances.

HIOKI E.E. CORPORATION
http://www.hioki.com
18-07 EN-3

HIOKI

http://www.hioki.com

Our regional contact information

HEADQUARTERS
81 Koizumi
Ueda, Nagano 386-1192 Japan

HIOKI EUROPE GmbH
Rudolf-Diesel-Strasse 5
65760 Eschborn, Germany
hioki@hioki.eu

1808EN

Edited and published by HIOKI E.E. CORPORATION

Printed in Japan

- CE declarations of conformity can be downloaded from our website.
- Contents subject to change without notice.
- This document contains copyrighted content.
- It is prohibited to copy, reproduce, or modify the content of this document without permission.
- Company names, product names, etc. mentioned in this document are trademarks or registered trademarks of their respective companies.